# SPECIFICATION FOR LCD MODULE

**Model No.** ___TM12864DDCW___

| | |
|---|---|
| **Prepared by:** | **Date:** |
| **Checked by :** | **Date:** |
| **Verified by :** | **Date:** |
| **Approved** | **Date:** |

**TIANMA MICROELECTRONICS CO., LTD**

## REVISION RECORD

| Date | Ref. Page | Revision No. | Revision Items | Check & Approval |
|---|---|---|---|---|
| | | | | |

## 1. General Specifications:

1.1 Display type: STN

1.2 Display color*:

Display color: Blue-Black

Background: Grey

1.3 Polarizer mode: Transflective/Positive

1.4 Viewing Angle: 6:00

1.5 Driving Method: 1/64 Duty 1/9 Bias

1.6 Backlight: LED

* Color tone is slightly changed by temperature and driving voltage.

1.7 Controller: HD61202UTE

1.8 Data Transfer: 8 Bit Parallel

1.9 Operating Temperature: -20----+70℃

Storage Temperature: -30----+80℃

1.10 Outline Dimensions: Refer to outline drawing on next page

1.11 Dot Matrix: 128 X 64 Dots

1.12 Dot Size: 0.40 X 0.40(mm)

1.13 Dot Pitch: 0.43 X 0.43(mm)

1.14 Weight: 45g

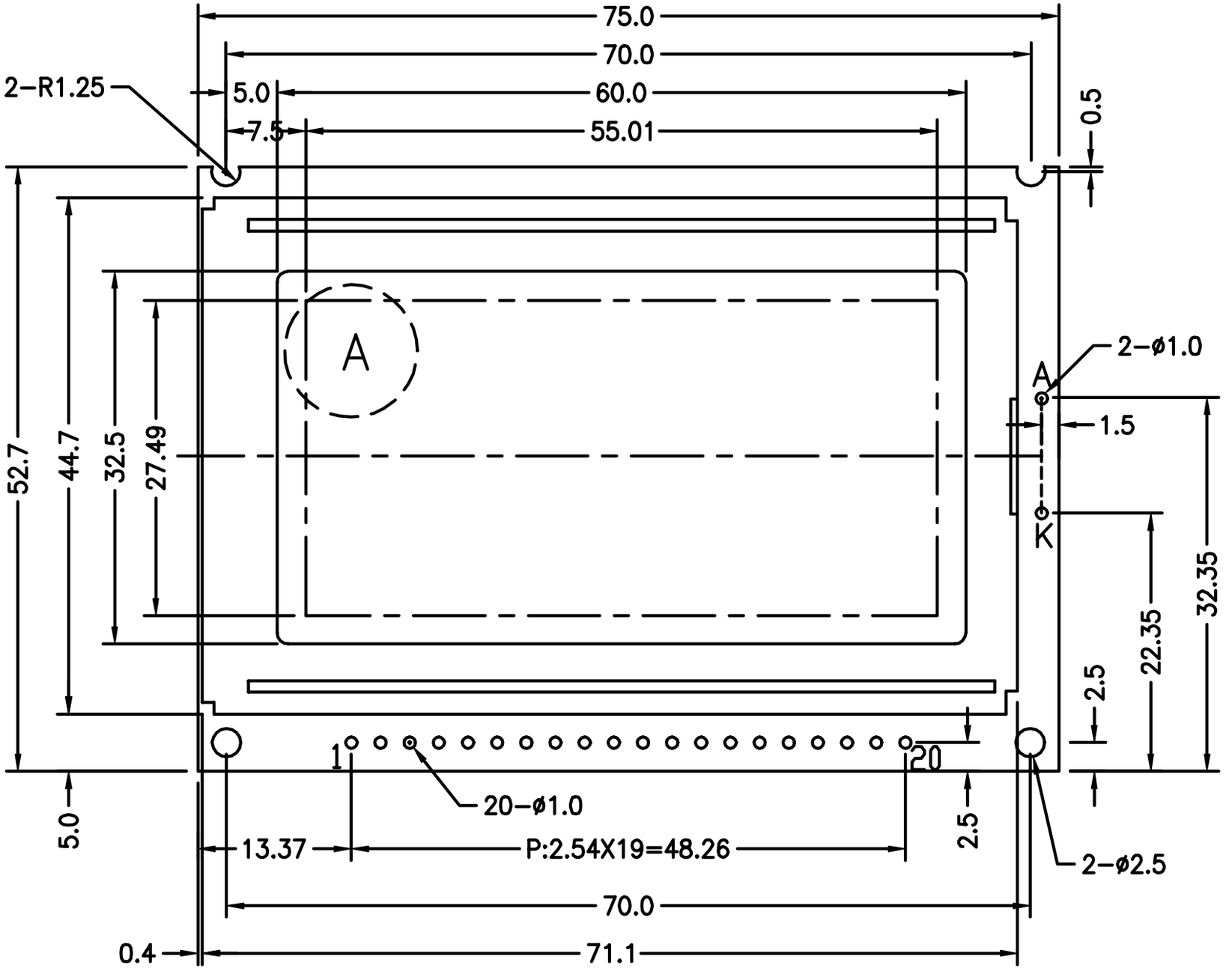


| 1 | 2 | 3 | 4 | 5 | 6 | 7 | 8 | 9 | 10 |
|---|---|---|---|---|---|---|---|---|---|
| $V_{DD}$ | $V_{SS}$ | $V_{EE}$ | DB0 | DB1 | DB2 | DB3 | DB4 | DB5 | DB6 |
| 11 | 12 | 13 | 14 | 15 | 16 | 17 | 18 | 19 | 20 |
| DB7 | CS1 | CS2 | RST | R/W | D/I | E | $F_{GND}$ | A | K |

## 3. LCD Module Part Numbering System

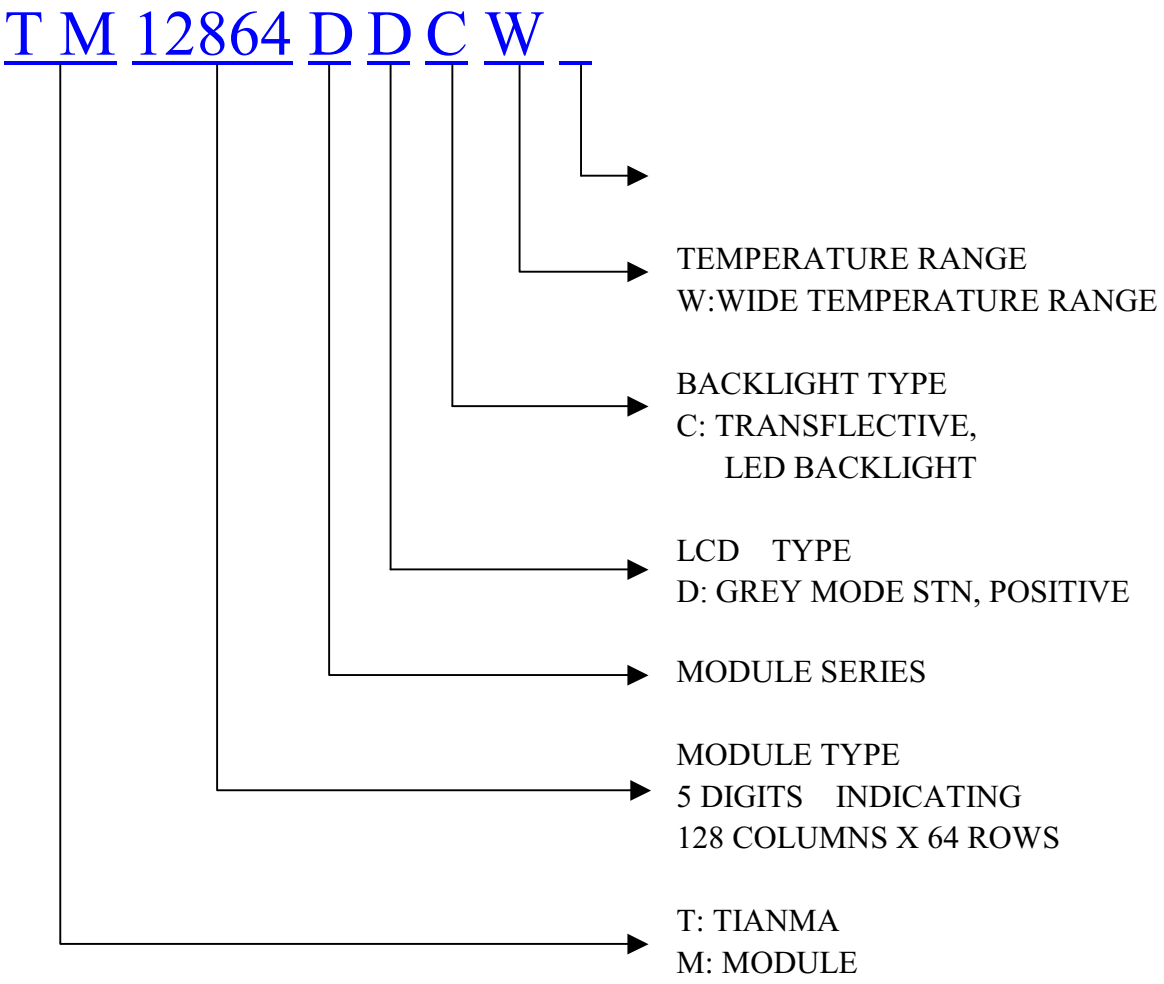

## 4. Circuit Block Diagram

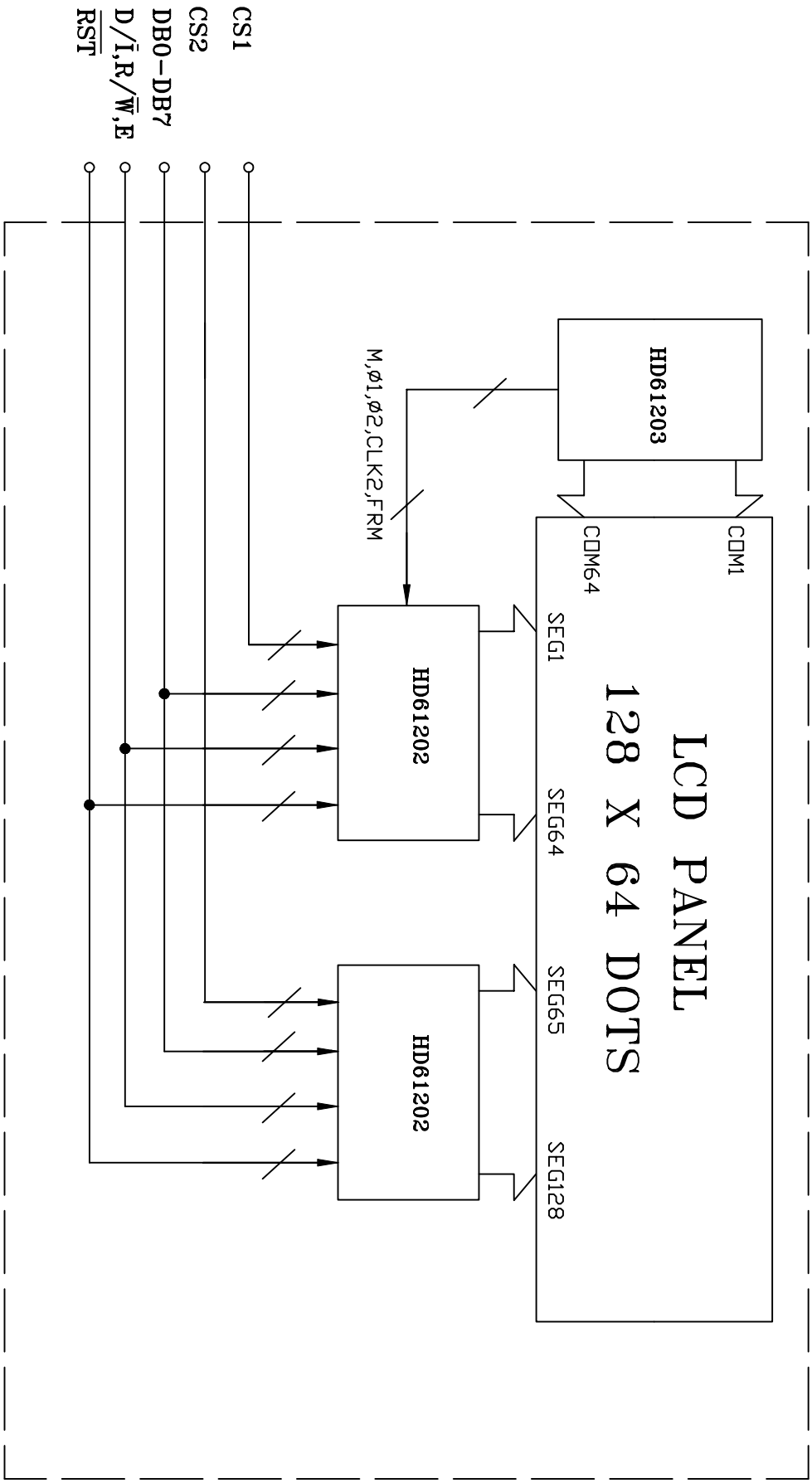

## 5. Absolute Maximum Ratings

| Item | Symbol | Min. | Max. | Unit | Remark |
|---|---|---|---|---|---|
| Power Supply Voltage | $V_{DD}-V_{SS}$ | -0.3 | 6.0 | V | |
| LCD Driving Voltage | $V_{LCD}$ | - | 25.0 | | |
| Operating Temperature Range | $T_{OP}$ | -20 | +70 | ℃ | No Condensation |
| Storage Temperature Range | $T_{ST}$ | -30 | +80 | | |

## 6. Electrical Specifications and Instruction Code

6.1 Electrical characteristics

| Item | | Symbol | Min. | Typ. | Max. | Unit |
|---|---|---|---|---|---|---|
| Supply Voltage (Logic) | | $V_{DD}-V_{SS}$ | 4.75 | 5.0 | 5.25 | V |
| Supply Voltage (LCD Drive) | | $V_{LCD}$ | - | 12.0 | - | V |
| Input Signal Voltage | High | $V_{IH}$ ($V_{DD}$=5.0) | $0.8V_{DD}$ | - | $V_{DD}$+0.3 | V |
| | Low | $V_{IL}$ ($V_{DD}$=5.0) | 0 | - | 0.2 $V_{DD}$ | V |
| Supply current (Logic) | | $I_{DD}$ | - | 1.4 | - | mA |
| Supply current (LCD Drive) | | $I_{EE}$ | - | 1.0 | - | mA |
| Supply current (LED) | | $I_{LED}$ | - | - | 200 | mA |

6.2 Interface Signals

| Pin No. | Symbol | Level | Description |
|---|---|---|---|
| 1 | $V_{DD}$ | 5.0V | Supply voltage for logic and LCD(+) |
| 2 | $V_{SS}$ | 0V | Ground |
| 3 | $V_{EE}$ | - | Operating voltage for LCD(-)(variable) |
| 4 | DB0 | H/L | Data bit0 |
| 5 | DB1 | H/L | Data bit1 |
| 6 | DB2 | H/L | Data bit2 |
| 7 | DB3 | H/L | Data bit3 |
| 8 | DB4 | H/L | Data bit4 |
| 9 | DB5 | H/L | Data bit5 |
| 10 | DB6 | H/L | Data bit6 |
| 11 | DB7 | H/L | Data bit7 |
| 12 | CS1 | L | Chip Select Signal 1 |
| 13 | CS2 | L | Chip Select Signal 2 |
| 14 | RST | L | Reset Signal |
| 15 | R/W | H/L | Selects read or write |
| 16 | D/I | H/L | H:Data;L:Instruction code |
| 17 | E | H/L | Enable Input |
| 18 | $F_{GND}$ | 0V | Frame Ground |
| 17 | A | 4.2V | Power supply for LED(+) Backlight |
| 18 | K | 0V | Power supply for LED(-) Backlight |

## 6.3 Interface Timing Chart

**Interface AC Characteristics**

**MPU Interface (GND = 0V, $V_{CC}$ = 2.7 to 5.5V, Ta = –30 to +75°C)***

| Item | Symbol | Min | Typ | Max | Unit | Note |
|---|---|---|---|---|---|---|
| E cycle time | $t_{CYC}$ | 1000 | — | — | ns | Fig. 10, Fig. 11 |
| E high level width | $P_{WEH}$ | 450 | — | — | ns | |
| E low level width | $P_{WEL}$ | 450 | — | — | ns | |
| E rise time | $t_r$ | — | — | 25 | ns | |
| E fall time | $t_f$ | — | — | 25 | ns | |
| Address setup time | $t_{AS}$ | 140 | — | — | ns | |
| Address hold time | $t_{AH}$ | 10 | — | — | ns | |
| Data setup time | $t_{DSW}$ | 200 | — | — | ns | Fig. 10 |
| Data delay time | $t_{DDR}$ | — | — | 320 | ns | Fig. 11, Fig. 12 |
| Data hold time (write) | $t_{DHW}$ | 10 | — | — | ns | Fig. 10 |
| Data hold time (read) | $t_{DHR}$ | 20 | — | — | ns | Fig. 11 |

Note: Specified at +75°C for die products.

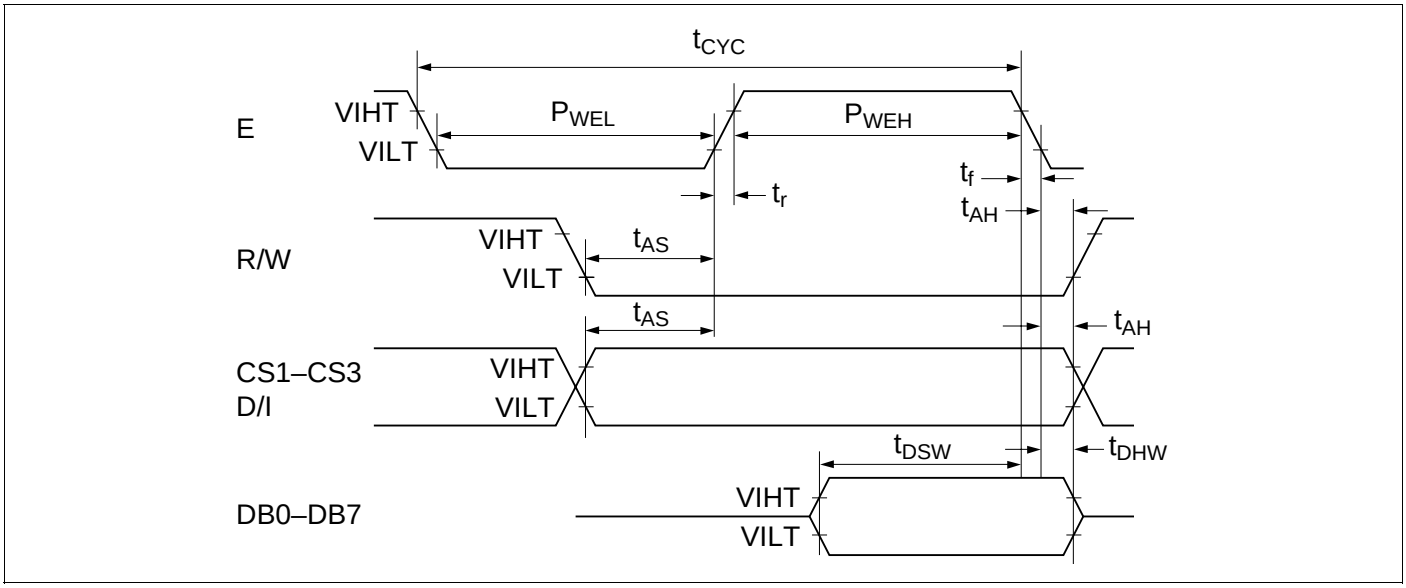


**Figure 9 MPU Write Timing**

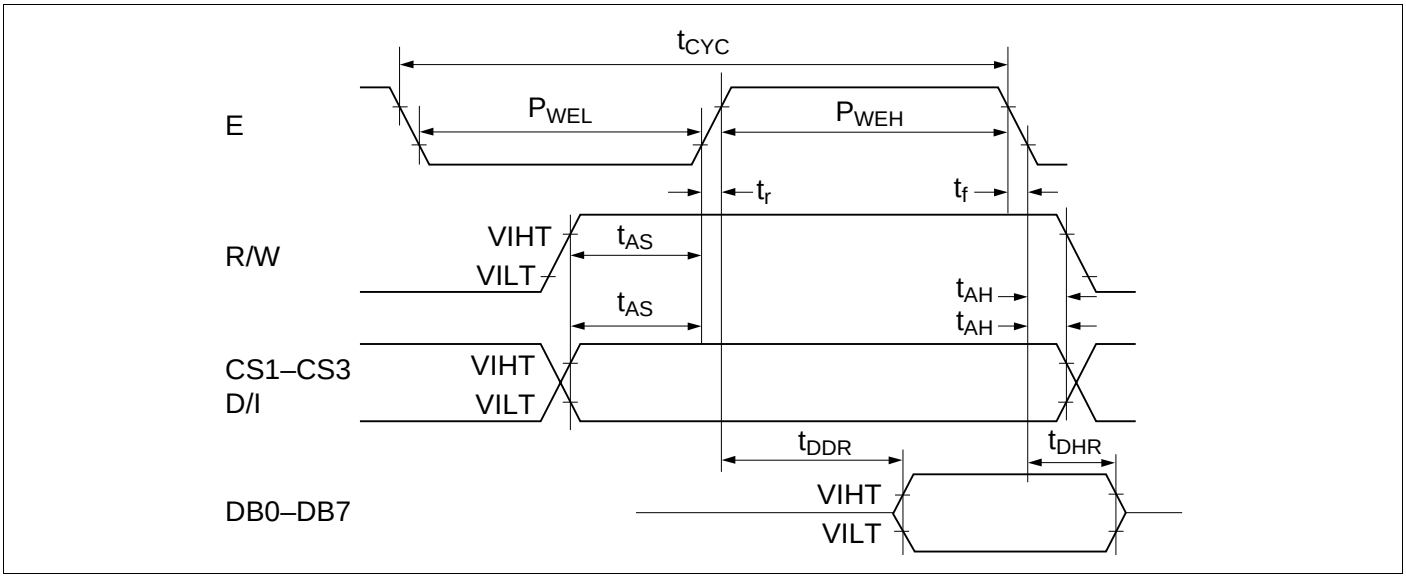


**Figure 10 MPU Read Timing**

## 6.4 Instruction Code

| Instructions | Code R/W | D/I | DB7 | DB6 | DB5 | DB4 | DB3 | DB2 | DB1 | DB0 | Functions | |
|---|---|---|---|---|---|---|---|---|---|---|---|---|
| Display on/off | 0 | 0 | 0 | 0 | 1 | 1 | 1 | 1 | 1 | 1/0 | Controls display on/off. RAM data and internal status are not affected. 1: on, 0: off. | |
| Display start line | 0 | 0 | 1 | 1 | Display start line (0–63) | | | | | | Specifies the RAM line displayed at the top of the screen. | |
| Set page (X address) | 0 | 0 | 1 | 0 | 1 | 1 | 1 | Page (0–7) | | | Sets the page (X address) of RAM at the page (X address) register. | |
| Set Y address | 0 | 0 | 0 | 1 | Y address (0–63) | | | | | | Sets the Y address in the Y address counter. | |
| Status read | 1 | 0 | Busy | 0 | ON/ OFF | Reset | 0 | 0 | 0 | 0 | Reads the status.<br>RESET 1: Reset<br>0: Normal<br>ON/OFF 1: Display off<br>0: Display on<br>Busy 1: Internal operation<br>0: Ready | |
| Write display data | 0 | 1 | Write data | | | | | | | | Writes data DB0 (LSB) to DB7 (MSB) on the data bus into display RAM. | Has access to the address of the display RAM specified in advance. After the access, Y address is increased by 1. |
| Read display data | 1 | 1 | Read data | | | | | | | | Reads data DB0 (LSB) to DB7 (MSB) from the display RAM to the data bus. | |

Note: Busy time varies with the frequency ($f_{CLK}$) of ø1, and ø2.
($1/f_{CLK} \leq T_{BUSY} \leq 3/f_{CLK}$)

## 7. Optical Characteristics

7.1 Optical Characteristics Ta=25℃

| Item | | Symbol | Condition | | Min. | Typ. | Max. | Unit |
|---|---|---|---|---|---|---|---|---|
| Viewing Angle | | $\theta_x$ | $C_r \geq 2$ | $\theta_y=0°$ | -30 | -- | 20 | Deg |
| | | $\theta_y$ | | $\theta_x=0°$ | -30 | -- | 30 | |
| Contrast Ratio | | $C_r$ | $\theta_x=0°$ $\theta_y=0°$ | | 3.0 | - | - | |
| Response Time | Turn on | $T_{on}$ | $\theta_x=0°$ $\theta_y=0°$ | | - | - | 300 | ms |
| | Turn off | $T_{off}$ | | | - | - | 300 | |

## 7.2 Definition of Optical Characteristics

### 7.2.1 Definition of Viewing Angle

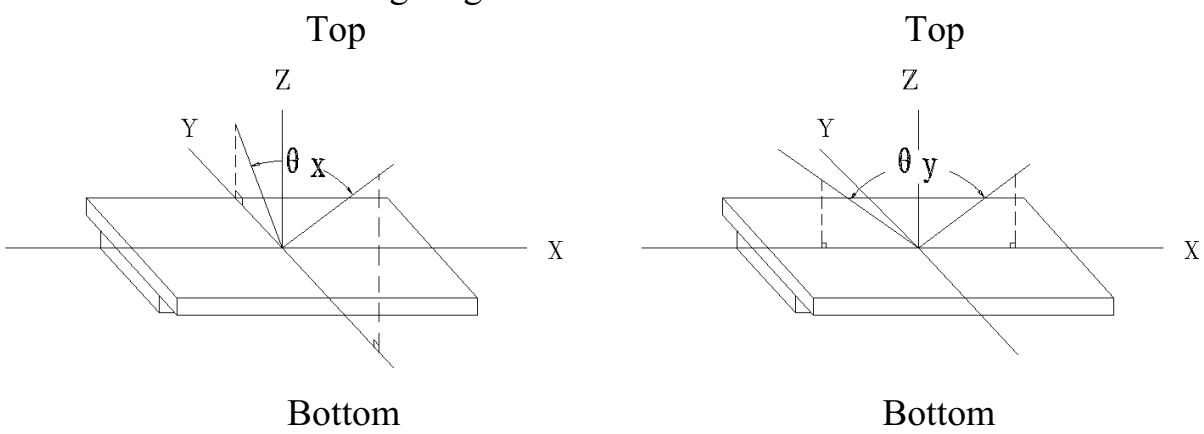


### 7.2.2 Definition of Contrast Ratio

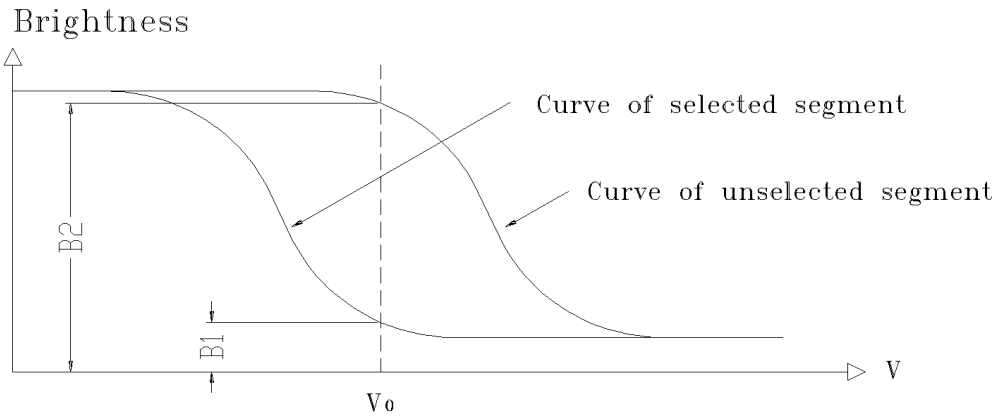


$$\text{Contrast Ratio} = B2/B1 = \frac{\text{unselected state brightness}}{\text{selected state brightness}}$$

Measuring Conditions:

1) Ambient Temperature: 25℃ ; 2) Frame frequency: 64Hz

### 7.2.3 Definition of Response time

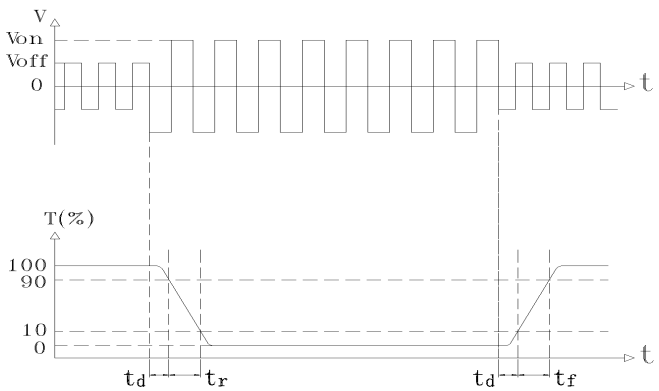


Turn on time: $t_{on} = t_d + t_r$ Turn off time: $t_{off} = t_d + t_f$

Measuring Condition:

1) Operating Voltage: 12.0V 2) Frame frequency: 64Hz

## 8. Reliability

8.1 Content of Reliability Test Ta=25℃

| No. | Test Item | Content of Test | Test condition |
|---|---|---|---|
| 1 | High Temperature Storage | Endurance test applying the high storage temperature for a long time | 80℃<br>96H |
| 2 | Low Temperature Storage | Endurance test applying the low storage temperature for a long time | -30℃<br>96H |
| 3 | High Temperature Operation | Endurance test applying the electric stress (voltage & current) and the thermal stress to the element for a long time | 70℃<br>96H |
| 4 | Low Temperature Operation | Endurance test applying the electric stress under low temperature for a long time | -20℃<br>96H |
| 5 | High Temperature /Humidity Storage | Endurance test applying the high temperature and high humidity storage for a long time | 40℃<br>90%RH<br>96H |
| 6 | Temperature Cycle | Endurance test applying the low and high temperature cycle<br>-20℃ ⟷ 25℃ ⟷ 60℃ ⟷ 25℃<br>30min 5min 30min 5min<br>← 1 cycle → | -20℃/60℃<br>10 cycles |
| 7 | Vibration Test (package state) | Endurance test applying the vibration during transportation | 10Hz~150Hz,<br>50m/s$^2$,<br>40min |
| 8 | Shock Test (package state) | Endurance test applying the shock during transportation | Half- sine wave,<br>100m/s$^2$,<br>11ms |
| 9 | Atmospheric Pressure Test | Endurance test applying the atmospheric pressure during transportation by air | 40kPa<br>16H |

8.2 Failure Judgment Criterion

| Criterion Item | Test Item No. | | | | | | | | | Failure Judgement Criterion |
|---|---|---|---|---|---|---|---|---|---|---|
| | 1 | 2 | 3 | 4 | 5 | 6 | 7 | 8 | 9 | |
| Basic Specification | √ | √ | √ | √ | √ | √ | √ | √ | √ | Out of the basic Specification |
| Electrical specification | √ | √ | √ | √ | √ | | | | | Out of the electrical specification |
| Mechanical Specification | | | | | | | √ | √ | | Out of the mechanical specification |
| Optical Characteristic | √ | √ | √ | √ | √ | √ | | | √ | Out of the optical specification |
| Note | For test item refer to 8.1 | | | | | | | | | |
| Remark | Basic specification = Optical specification + Mechanical specification | | | | | | | | | |

## 9. QUALITY LEVEL

| Examination or Test | At $T_a$=25℃ (unless otherwise stated) | Inspection | | | | |
|---|---|---|---|---|---|---|
| | | Min. | Max. | Unit | IL | AQL |
| External Visual Inspection | Under normal illumination and eyesight condition, the distance between eyes and LCD is 25cm. | See Appendix A | | | II | Major 1.0 Minor 2.5 |
| Display Defects | Under normal illumination and eyesight condition, display on inspection. | See Appendix B | | | II | Major 1.0 Minor 2.5 |
| Note: Major defects: Open segment or common, Short, Serious damages, Leakage<br>Miner defects: Others<br>Sampling standard conforms to GB2828 | | | | | | |

## 10. Precautions for Use of LCD Modules

10.1 Handling Precautions

10.1.1 The display panel is made of glass. Do not subject it to a mechanical shock by dropping it from a high place, etc.

10.1.2 If the display panel is damaged and the liquid crystal substance inside it leaks out, be sure not to get any in your mouth, if the substance comes into contact with your skin or clothes, promptly wash it off using soap and water.

10.1.3 Do not apply excessive force to the display surface or the adjoining areas since this may cause the color tone to vary.

10.1.4 The polarizer covering the display surface of the LCD module is soft and easily scratched. Handle this polarizer carefully.

10.1.5 If the display surface is contaminated, breathe on the surface and gently wipe it with a soft dry cloth. If still not completely clear, moisten cloth with one of the following solvents:

— Isopropyl alcohol
— Ethyl alcohol

Solvents other than those mentioned above may damage the polarizer. Especially, do not use the following:

— Water
— Ketone
— Aromatic solvents

10.1.6 Do not attempt to disassemble the LCD Module.

10.1.7 If the logic circuit power is off, do not apply the input signals.

10.1.8 To prevent destruction of the elements by static electricity, be careful to maintain an optimum work environment.

a. Be sure to ground the body when handling the LCD Modules.
b. Tools required for assembly, such as soldering irons, must be properly ground.
c. To reduce the amount of static electricity generated, do not conduct assembly and other work under dry conditions.
d. The LCD Module is coated with a film to protect the display surface. Be care when peeling off this protective film since static electricity may be generated.

10.2 Storage precautions

10.2.1 When storing the LCD modules, avoid exposure to direct sunlight or to the light of fluorescent lamps.

10.2.2 The LCD modules should be stored under the storage temperature range. If the LCD modules will be stored for a long time, the recommend condition is:

Temperature : 0℃ ～ 40℃

Relatively humidity: ≤80%

10.2.3 The LCD modules should be stored in the room without acid, alkali and harmful gas.

10.3 The LCD modules should be no falling and violent shocking during transportation, and also should avoid excessive press, water, damp and sunshine.

**Appendix A**

Inspection items and criteria for appearance defects

| Items | Contents | Criteria | | |
|---|---|---|---|---|
| Leakage | | Not permitted | | |
| Rainbow | | According to the limit specimen | | |
| Polarizer | Wrong polarizer attachment | Not permitted | | |
| | Bubble between polarizer and glass | Not counted | Max. 3 defects allowed | |
| | | $\phi<0.3$mm | $0.3\text{mm}\leqslant\phi\leqslant0.5$mm | |
| | Scratches of polarizer | According to the limit specimen | | |
| Black spot (in viewing area) | 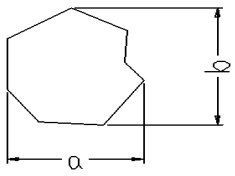 | Not counted | Max. 3 spots allowed | Max. 3 spots (lines) allowed |
| | | $X<0.2$mm | $0.2\text{mm}\leqslant X\leqslant0.5$mm | |
| | | $X=(a+b)/2$ | | |
| Black line (in viewing area) | 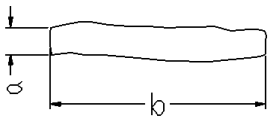 | Not counted | Max. 3 lines allowed | |
| | | $a<0.02$mm | $0.02\text{mm}\leqslant a\leqslant0.05$mm<br>$b\leqslant2.0$mm | |
| Progressive cracks | 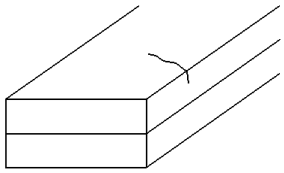 | Not permitted | | |

**Appendix B**

Inspection items and criteria for display defects

| Items | Contents | Criteria | | |
|---|---|---|---|---|
| Open segment or open common | | Not permitted | | |
| Short | | Not permitted | | |
| Wrong viewing angle | | Not permitted | | |
| Contrast radio uneven | | According to the limit specimen | | |
| Crosstalk | | According to the limit specimen | | |
| Pin holes and cracks in segment (DOT) | 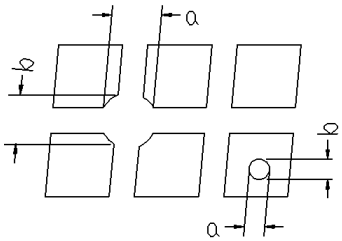 | Not counted | Max.3 dots allowed | Max.3 dots allowed |
| | | X<0.1mm | 0.1mm≤X≤0.2mm | |
| | | X=(a+b)/2 | | |
| | 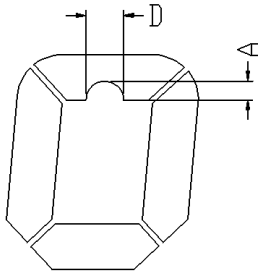 | Not counted | Max.2 dots allowed | |
| | | A<0.1mm | 0.1mm≤A≤0.2mm<br>D<0.25mm | |
| Black spot (in viewing area) | 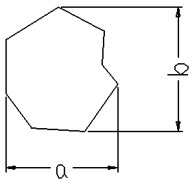 | Not counted | Max.3 spots allowed | Max.3 spots (lines) allowed |
| | | X<0.1mm | 0.1mm≤X≤0.2mm | |
| | | X=(a+b)/2 | | |
| Black line (in viewing area) | 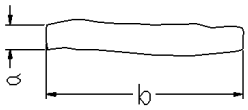 | Not counted | Max.3 lines allowed | |
| | | a<0.02mm | 0.02mm≤a≤0.05mm<br>b≤0.5mm | |

**Appendix B**

Inspection items and criteria for display defects (continued)

<table>
<tr><th>Items</th><th>Content</th><th colspan="3">Criteria</th></tr>
<tr><td rowspan="5">Transfor-<br>mation<br>of segment</td><td rowspan="3"> 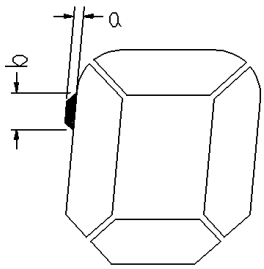
</td><td>Not counted</td><td>Max. 2 defects allowed</td><td rowspan="5">Max.3<br>defects<br>allowed</td></tr>
<tr><td>x＜0.1mm</td><td>0.1mm≤x≤0.2mm</td></tr>
<tr><td colspan="2">x=(a+b)/2</td></tr>
<tr><td rowspan="2"> 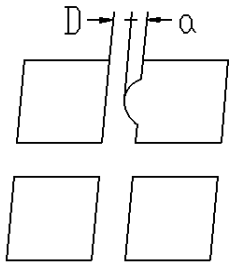
</td><td>Not counted</td><td>Max. 1 defects allowed</td></tr>
<tr><td>a＜0.1mm</td><td>0.1mm≤a≤0.2mm<br>D>0</td></tr>
<tr><td> 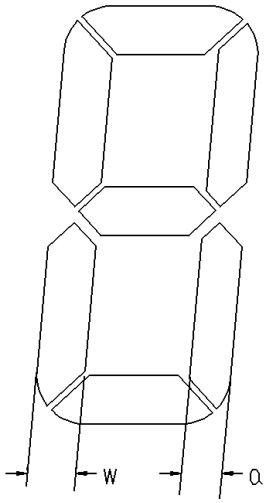
</td><td colspan="3">Max.2 defects allowed<br>0.8W≤a≤1.2W<br><br>a=measured value of width<br>W=nominal value of width</td></tr>
</table>