www.DataSheet4U.com

ZL50070

24 K Channel Digital Switch with High Jitter Tolerance, Rate Conversion per Group of 4 Streams (8, 16, 32 or 64 Mbps), and 96 Inputs and 96 Outputs

Data Sheet

January 2006

Features

- 24,576 channel x 24,576 channel non-blocking digital Time Division Multiplex (TDM) switch at 65.536 Mbps, 32.768 Mbps and 16.384 Mbps or using a combination of rates
- 12,288 channel x 12,288 channel non-blocking digital TDM switch at 8.192 Mbps
- High jitter tolerance with multiple input clock sources and frequencies
- Up to 96 serial TDM input streams, divided into 24 groups with 4 input streams per group
- Up to 96 serial TDM output streams, divided into 24 groups with 4 output streams per group
- Per-group input and output data rate conversion selection at 65.536 Mbps, 32.768 Mbps, 16.384 Mbps and 8.192 Mbps. Input and output data group rates can differ
- Per-group input bit delay for flexible sampling point selection
- Per-group output fractional bit advancement
- Four sets of output timing signals for interfacing additional devices
- Per-channel A-Law/μ-Law Translation

Ordering Information

ZL50070GAC	484 Ball PBGA	Trays
ZL50070GAG2	484 Ball PBGA**	Trays

**Pb Free Tin/Silver/Copper

-40°C to +85°C

- Per-channel constant or variable throughput delay for frame integrity and low latency applications
- Per-stream Bit Error Rate (BER) test circuits
- Per-channel high impedance output control
- Per-channel force high output control
- Per-channel message mode
- Control interface compatible with Intel and Motorola Selectable 32 bit and 16 bit non-multiplexed buses
- Connection Memory block programming
- Supports ST-BUS and GCI-Bus standards for input and output timing
- IEEE 1149.1 (JTAG) test port
- 3.3 V I/O with 5 V tolerant inputs; 1.8 V core voltage

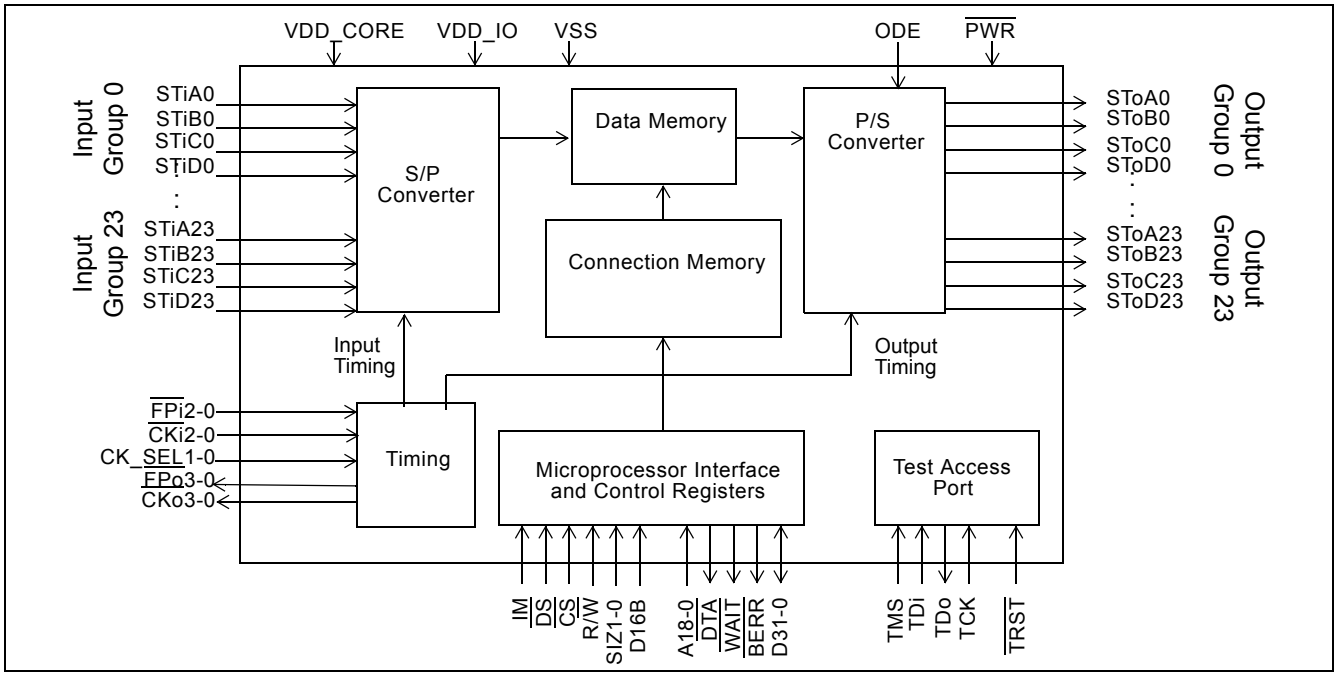

Figure 1 - ZL50070 Functional Block Diagram

Zarlink Semiconductor Inc.
Zarlink, ZL and the Zarlink Semiconductor logo are trademarks of Zarlink Semiconductor Inc.
Copyright 2004-2006, Zarlink Semiconductor Inc. All Rights Reserved.

Applications

- Large Switching Platforms
- Central Office Switches
- Wireless Base Stations
- Multi-service Access Platforms
- Media Gateways

Description

The ZL50070 is a non-blocking Time Division Multiplex (TDM) switch with maximum 24,576 x 24,576 channels. The device can switch 64 kbps and Nx64 kbps TDM channels from any input stream to any output stream. With a number of enhanced features, the ZL50070 is designed for high capacity voice and data switching applications.

The ZL50070 has 96 input and 96 output data streams which can operate at 8.192 Mbps, 16.384 Mbps, 32.768 Mbps or 65.536 Mbps. The large number of inputs and outputs maintains full 24 K x 24 K channel switching capacity at bit rates of 65 Mbps, 32 Mbps and 16 Mbps. Up to 24 input and output data streams may operate at 65 Mbps. Up to 48 input and output data streams may operate at 32 Mbps. Up to 96 input and output data streams may operate at 16 Mbps or 8 Mbps. The data rate can be independently set in groups of 4 input or output streams. In this way it is possible to provide rate conversion from input data channel to output data channel.

The ZL50070 uses a master clock ($\overline{CKi}$0) and frame pulse ($\overline{FPi}$0) to define the TDM data stream frame boundary and timing. A high speed system clock is derived internally from $\overline{CKi}$0 and $\overline{FPi}$0. The input and output data streams can independently reference their timings to one of the input clocks or to the internal system clock.

The ZL50070 has a variety of user configurable options designed to provide flexibility when data streams are connected to multiple TDM components or circuits. These include:

- Two additional programmable reference inputs, $\overline{CKi}$2 - 1 and $\overline{FPi}$2 - 1, which can be used to provide alternative sources for input and output stream timing
- Variable input bit delay and output advancement, to accommodate delays and frame offsets of streams connected through different data paths
- Four timing outputs, $\overline{CKo}$3 - 0 and $\overline{FPo}$3 - 0, which can be configured independently to provide a variety of clock and frame pulse options
- Support of both ST-BUS and GCI-Bus formats

The ZL50070 also has a number of value added features for voice and data applications:

- Per-channel variable delay mode for low latency applications and constant delay mode for frame integrity applications
- Per-channel A-Law/μ-Law Conversions for voice
- 96 separate Pseudo-random Bit Sequence (PRBS) test circuits; one per stream. This provides an integrated Bit Error Rate (BER) test capability to facilitate data path integrity checking

The ZL50070 has two major modes of operation: Connection Mode (normal) and Message Mode. In Connection Mode, data bytes received at the TDM inputs are switched to timeslots in the output data streams, with mapping controlled by the Connection Memories. Using Zarlink's Message Mode capability, microprocessor data can be broadcast to the output data streams on a per-channel basis. This feature is useful for transferring control and status information to external circuits or other TDM devices.

A non-multiplexed microprocessor port provides access to the internal Data Memory, Connection Memory and Control Registers used to program ZL50070 options. The port is configurable to interface with either Motorola or Intel-type microprocessors and is selectable to be either 32 bit or 16 bit.

The mandatory requirements of IEEE 1149.1 standard are supported via the dedicated Test Access Port.

Table of Contents

Features 1
Applications 2
Description 2
Change Summary 7
1.0 Functional Description 15
1.1 Overview 15
1.2 Switch Operation 15
1.3 Stream Provisioning 16
1.4 Input and Output Rate Selection 16
1.4.1 Per Group Rate Selection 17
1.5 Rate Conversion 18
2.0 Input Clock ($\overline{\text{CKi}}$) and Input Frame Pulse ($\overline{\text{FPi}}$) Timing 18
3.0 Output Clock ($\overline{\text{CKo}}$) and Output Frame Pulse ($\overline{\text{FPo}}$) Timing 19
4.0 Output Channel Control 19
5.0 Data Input Delay and Data Output Advancement 20
5.1 Input Sampling Point Delay Programming 20
5.2 Fractional Bit Advancement on Output 20
6.0 Message Mode 22
6.1 Data Memory Read 22
6.2 Connection Memory Block Programming 22
7.0 Data Delay Through the Switching Paths 22
7.1 Constant Delay Mode 22
7.2 Variable Delay Mode 23
8.0 Per-Channel A-Law/m-Law Translation 24
9.0 Bit Error Rate Tester 24
10.0 Microprocessor Port 25
10.1 Addressing 25
10.2 32 Bit Bus Operation 26
10.3 16 Bit Bus Operation 27
10.4 Bus Operation 28
10.4.1 Read Cycle 28
10.4.2 Write Cycle 29
11.0 Power-up and Initialization of the ZL50070 30
11.1 Device Reset and Initialization 30
11.2 Power Supply Sequencing 30
11.3 Initialization 30
12.0 IEEE 1149.1 Test Access Port 31
12.1 Test Access Port (TAP) 31
12.2 Instruction Register 32
12.3 Test Data Register 32
12.4 Boundary Scan Description Language (BSDL) 32
13.0 Memory Map of ZL50070 32
14.0 Detailed Memory and Register Descriptions 33
14.1 Connection Memory 33
14.1.1 Connection Memory Bit Functions 36
14.1.2 Connection Memory LSB 37
14.2 Data Memory 39
14.3 BER Control Memory and Error Counters 40
14.3.1 Input BER Enable Control Memory 40
14.3.2 BER Counters 41

Table of Contents

14.4 Group Control Registers 42
14.5 Input Clock Control Register 45
14.6 Output Clock Control Register 46
14.7 Block Init Register 49
14.8 Block Init Enable Register 50
15.0 DC/AC Electrical Characteristics 51

List of Figures

Figure 1 - ZL50070 Functional Block Diagram 1
Figure 2 - 24 K x 24 K Channel Basic Switch Configuration 15
Figure 3 - ZL50070 24 K x 24 K Channel and Stream Provisioning Example at Multiple Rates 17
Figure 4 - Input and Output Data Rate Conversion Example. 18
Figure 5 - Input Sampling Point Delay Programming. 20
Figure 6 - Output Bit Advancement Timing 21
Figure 7 - Data Throughput Delay for Constant Delay. 23
Figure 8 - Data Throughput Delay for Variable Delay 23
Figure 9 - Example PRBS Timeslot Insertion. 25
Figure 10 - Read Cycle Operation 29
Figure 11 - Write Cycle Operation 30
Figure 12 - Frame Pulse Input and Clock Input 53
Figure 13 - Frame Skew Timing Diagram 54
Figure 14 - ST-Bus Frame Pulse and Clock Output Timing 56
Figure 15 - GCI Frame Pulse and Clock Output Timing 56
Figure 16 - Serial Data Timing to CKi 58
Figure 17 - Serial Data Timing to CKo 60
Figure 18 - CKo to other CKo Skew. 61
Figure 19 - Microprocessor Bus Interface Timing 63
Figure 20 - Intel Mode Timing 63
Figure 21 - IEEE 1149.1 Test Port & $\overline{\text{PWR}}$ Reset Timing. 64

List of Tables

Table 1 - Data Rate and Maximum Switch Size . . . 16
Table 2 - TDM Stream Bit Rates . . . 16
Table 3 - $\overline{CK}$i0 and $\overline{FP}$i0 Setting via CK_SEL1 - 0 . . . 19
Table 4 - Input and Output Voice and Data Coding . . . 24
Table 5 - Example of Address and Byte Significance . . . 26
Table 6 - 32 Bit Motorola Mode Byte Addressing . . . 26
Table 7 - 32 Bit Motorola Mode Access Transfer Size . . . 26
Table 8 - 32 Bit Intel Mode Bus Enable Signals . . . 26
Table 9 - Byte Enable Signals . . . 27
Table 10 - 16 Bit Mode Word Alignment. . . . 27
Table 11 - 16 Bit Mode Example Byte Address . . . 28
Table 12 - Memory Map . . . 32
Table 13 - Connection Memory Group Address Mapping . . . 33
Table 14 - Connection Memory Stream Address Offset at Various Output Rates . . . 34
Table 15 - Connection Memory Timeslot Address Offset Range . . . 34
Table 16 - Connection Memory Bits (CMB) . . . 36
Table 17 - Connection Memory LSB Group Address Mapping . . . 38
Table 18 - Connection Memory LSB Stream Address Offset at Various Output Rates . . . 38
Table 19 - Data Memory Group Address Mapping. . . . 39
Table 20 - Data Memory Stream Address Offset at Various Output Rates . . . 39
Table 21 - BER Enable Control Memory Group Address Mapping . . . 40
Table 22 - BER Enable Control Memory Stream Address Offset at Various Output Rates . . . 40
Table 23 - BER Counter Group and Stream Address Mapping . . . 41
Table 24 - Group Control Register Addressing . . . 42
Table 25 - Group Control Register . . . 42
Table 26 - Input Clock Control Register . . . 45
Table 27 - Output Clock Control Register . . . 46
Table 28 - Block and Power-up Initialization Status Bits . . . 50

Change Summary

The following table captures the changes from the April 2005 issue.

Page	Item	Change
28	10.4.1, “Read Cycle“	Clarified $\overline{WAIT}$ signal description in Read Cycle.
29	Figure 10 "Read Cycle Operation"	Corrected $\overline{WAIT}$ signal tristate timing in Read Cycle.
29	10.4.2, “Write Cycle“	Clarified $\overline{WAIT}$ signal description in Write Cycle.
30	Figure 11 "Write Cycle Operation"	Corrected $\overline{WAIT}$ signal tristate timing in Write Cycle.
41	Table 23 “BER Counter Group and Stream Address Mapping“	Corrected BER Counter Group and Stream Mapping Addresses.

The following table captures the changes from the July 2004 issue.

Page	Item	Change
12	"Pin Description" - CKo0-3	Added special requirement for using output clock at 65.536MHz.
13	"Pin Description" - $\overline{DTA}$, $\overline{WAIT}$	Added more detailed description to the $\overline{DTA}$ and $\overline{WAIT}$ pins.
52	“AC Electrical Characteristics1 - FPi0-2 and CKi0-2 Timing“	Added t_{FPIS}, t_{FPIH} (input frame pulse setup and hold) maximum values.
54	Figure 13 "Frame Skew Timing Diagram"	Added $\overline{FPi}$1,2 frame pulse to Figure “Frame Skew Timing Diagram” to clarify frame boundary skew.
55	(1) “AC Electrical Characteristics1 - FPO0-3 and CKO0-3 (65.536 MHz) Timing“ (2) “AC Electrical Characteristics1 - FPO0-3 and CKO0-3 (32.768 MHz) Timing“ (3) “AC Electrical Characteristics1 - FPO0-3 and CKO0-3 (16.384 MHz) Timing“ (4) “AC Electrical Characteristics1 - FPO0-3 and CKO0-3 (8.192 MHz) Timing“	Added $\overline{CKO}$0-3 and $\overline{FPO}$0-3 setup and hold parameters for all different clock rates.
56	“AC Electrical Characteristics - Output Clock Jitter Generation“	Added this table to specify $\overline{CKO}$0-3 jitter generation.
57	“AC Electrical Characteristics1 - Serial Data Timing2 to CKi“	(1) Values of parameters t_{SIPS}, t_{SIPH}, t_{SINS}, t_{SINH}, t_{SIPV}, t_{SINV}, t_{SIPZ} and t_{SINZ} are revised. (2) Separated parameter t_{CKD} into t_{CKDP} and t_{CKDN}.
58	Figure 16 "Serial Data Timing to CKi"	Added more detail to figure.
59	“AC Electrical Characteristics - Serial Data Timing1 to CKo2“	Values of parameters t_{SOPS}, t_{SOPH}, t_{SONS}, t_{SONH}, t_{SOPV}, t_{SONV}, t_{SOPZ} and t_{SONZ} are revised.
60	Figure 17 "Serial Data Timing to CKo"	Added more detail to figure.
61	“AC Electrical Characteristics - CKo to Other CKo1 Skew“	Added $\overline{CKO}$ skew parameter, t_{CKOS}.
61	Figure 18 "CKo to other CKo Skew"	Added figure to show t_{CKOS}.

Pin Diagram - 23 mm x 23 mm 484 Ball PBGA (as viewed through top of package)

A1 corner identified by metallized marking

	1	2	3	4	5	6	7	8	9	10	11	12	13	14	15	16	17	18	19	20	21	22
A	$\overline{\text{CKo}}$ [0]	STiA [0]	D[30]	D[25]	D[20]	D[16]	D[15]	D[11]	D[7]	D[4]	D[0]	A[18]	A[14]	A[10]	A[7]	A[2]	A[1]	IC	$\overline{\text{DTA}}$	$\overline{\text{PWR}}$	NC	TCK
B	SToB [1]	STiD [1]	SToA [0]	D[31]	D[26]	D[21]	D16B	D[13]	D[9]	D[5]	D[3]	A[17]	A[11]	A[8]	A[6]	A[0]	$\overline{\text{BERR}}$	SIZ[0]	NC	IC	TDo	IC
C	STiA [2]	STiA [3]	STiB [1]	STiD [0]	IM	D[27]	D[22]	D[19]	D[12]	D[6]	D[1]	A[15]	A[9]	A[3]	R/$\overline{\text{W}}$	$\overline{\text{CS}}$	$\overline{\text{FPo}}$ [3]	IC	$\overline{\text{TRST}}$	NC	IC	IC
D	STiC [3]	STiD [2]	SToC [1]	SToD [0]	SToB [0]	STiC [0]	D[28]	D[23]	D[17]	D[8]	A[16]	A[13]	A[5]	$\overline{\text{DS}}$	$\overline{\text{WAIT}}$	NC	IC	TDi	NC	IC	NC	NC
E	STiD [4]	SToB [3]	STiC [2]	SToA [1]	STiA [1]	SToC [0]	STiB [0]	D[24]	D[18]	D[14]	D[2]	A[12]	A[4]	$\overline{\text{CKo}}$ [3]	SIZ[1]	IC	TMS	NC	IC	NC	IC	IC
F	SToB [4]	SToC [3]	SToB [2]	SToD [1]	STiC [1]	V_{SS}	V_{DD_CORE}	D[29]	V_{DD_IO}	V_{DD_CORE}	D[10]	V_{DD_IO}	V_{DD_CORE}	NC	V_{DD_IO}	V_{SS}	V_{DD_CORE}	NC	NC	IC	NC	IC
G	SToD [4]	SToD [3]	SToD [2]	STiB [2]	$\overline{\text{FPo}}$ [0]	V_{DD_IO}	V_{SS}	V_{SS}	V_{DD_CORE}	V_{DD_IO}	V_{SS}	V_{DD_CORE}	V_{DD_IO}	V_{SS}	V_{DD_CORE}	V_{DD_IO}	V_{SS}	NC	IC	IC	$\overline{\text{CKi}}$ [2]	IC
H	STiA [5]	STiA [4]	STiD [3]	SToC [2]	SToA [2]	V_{DD_CORE}	V_{DD_IO}	V_{SS}	V_{SS}	V_{DD_CORE}	V_{DD_IO}	V_{SS}	V_{DD_CORE}	V_{DD_IO}	V_{SS}	V_{DD_CORE}	NC	NC	IC	NC	IC	IC
J	STiB [5]	$\overline{\text{CKi}}$ [1]	STiC [4]	SToA [3]	STiB [3]	V_{DD_IO}	V_{DD_CORE}	V_{DD_IO}	V_{SS}	V_{SS}	V_{SS}	V_{SS}	V_{SS}	V_{SS}	V_{DD_IO}	V_{SS}	V_{DD_IO}	NC	NC	IC	IC	NC
K	SToB [5]	STiD [5]	$\overline{\text{FPi}}$ [1]	SToC [4]	SToA [4]	STiB [4]	V_{SS}	V_{DD_CORE}	V_{SS}	V_{SS}	V_{SS}	V_{SS}	V_{SS}	V_{SS}	V_{DD_CORE}	V_{DD_IO}	V_{DD_CORE}	NC	$\overline{\text{FPi}}$ [2]	NC	NC	IC
L	ODE	SToD [5]	SToC [5]	STiD [6]	STiC [5]	V_{DD_CORE}	V_{DD_IO}	V_{SS}	V_{SS}	V_{SS}	V_{SS}	V_{SS}	V_{SS}	V_{SS}	V_{SS}	V_{DD_CORE}	NC	IC	IC	IC	NC	NC
M	STiA [6]	STiB [6]	STiC [6]	STiC [7]	SToA [5]	V_{DD_IO}	V_{DD_CORE}	V_{DD_IO}	V_{SS}	V_{SS}	V_{SS}	V_{SS}	V_{SS}	V_{SS}	V_{DD_IO}	V_{SS}	V_{DD_IO}	IC	IC	NC	NC	IC
N	SToB [6]	SToC [6]	SToD [6]	SToA [7]	SToA [6]	V_{SS}	V_{SS}	V_{DD_CORE}	V_{SS}	V_{SS}	V_{SS}	V_{SS}	V_{SS}	V_{SS}	V_{DD_CORE}	V_{DD_IO}	SToD [23]	NC	IC	NC	IC	IC
P	STiA [7]	STiB [7]	SToB [7]	STiA [8]	SToA [8]	V_{DD_CORE}	V_{DD_IO}	V_{DD_IO}	V_{SS}	V_{SS}	V_{SS}	V_{SS}	V_{SS}	V_{SS}	V_{DD_IO}	V_{DD_CORE}	V_{DD_CORE}	SToA [23]	STiC [23]	IC	NC	NC
R	STiD [7]	SToC [7]	IC	SToB [8]	STiB [8]	V_{DD_IO}	V_{DD_CORE}	V_{SS}	V_{SS}	V_{DD_CORE}	V_{DD_IO}	V_{SS}	V_{DD_CORE}	V_{DD_IO}	V_{SS}	V_{SS}	V_{DD_IO}	$\overline{\text{CKo}}$ [2]	STiD [22]	STiB [23]	IC	IC
T	SToD [7]	V_{SS}	SToC [8]	STiD [9]	STiB [10]	SToD [9]	V_{SS}	V_{SS}	V_{DD_CORE}	V_{DD_IO}	V_{SS}	V_{DD_CORE}	V_{SS}	V_{SS}	V_{DD_CORE}	V_{DD_IO}	V_{SS}	SToA [21]	$\overline{\text{FPo}}$ [2]	SToC [22]	STiD [23]	SToC [23]
U	STiC [8]	SToD [8]	STiC [9]	STiA [10]	SToC [10]	V_{SS}	V_{DD_IO}	SToC [12]	V_{DD_IO}	V_{DD_CORE}	STiA [16]	V_{DD_IO}	V_{DD_CORE}	SToA [18]	V_{DD_IO}	STiC [19]	V_{DD_CORE}	SToC [20]	STiD [21]	STiC [22]	SToD [22]	SToB [23]
V	STiD [8]	STiB [9]	SToC [9]	SToB [10]	SToD [10]	SToB [11]	STiC [12]	STiB [13]	SToA [13]	STiC [15]	SToB [16]	SToC [16]	IC	CK_SEL[1]	STiB [18]	SToA [19]	STiA [20]	SToB [20]	SToD [20]	SToC [21]	SToA [22]	STiA [23]
W	STiA [9]	SToB [9]	STiD [10]	STiA [11]	SToA [11]	STiB [12]	SToD [12]	STiC [13]	STiA [14]	SToD [14]	SToC [15]	$\overline{\text{CKi}}$ [0]	IC	SToB [17]	CK_SEL[0]	SToC [18]	STiD [19]	SToD [19]	STiD [20]	STiC [21]	STiA [22]	SToB [22]
Y	SToA [9]	SToA [10]	STiB [11]	SToC [11]	SToA [12]	$\overline{\text{FPo}}$ [1]	STiD [13]	STiB [14]	SToB [14]	STiD [15]	SToD [15]	SToD [16]	IC	STiC [17]	SToC [17]	STiA [18]	SToB [18]	STiB [19]	STiB [20]	SToA [20]	SToB [21]	STiB [22]
AA	STiC [10]	STiC [11]	SToD [11]	STiD [12]	STiA [13]	SToB [13]	SToD [13]	SToA [14]	STiA [15]	SToA [15]	STiB [16]	SToA [16]	$\overline{\text{FPi}}$ [0]	STiA [17]	SToA [17]	IC	IC	SToD [18]	SToB [19]	SToC [19]	STiA [21]	SToD [21]
AB	STiD [11]	STiA [12]	SToB [12]	$\overline{\text{CKo}}$ [1]	SToC [13]	STiC [14]	STiD [14]	SToC [14]	STiB [15]	SToB [15]	STiC [16]	STiD [16]	NC	NC	STiB [17]	STiD [17]	SToD [17]	STiC [18]	STiD [18]	STiA [19]	STiC [20]	STiB [21]

Pin Description

Pin	Name	Description
		TDM Interface
F7, F10, F13, F17, G9, G12, G15, H6, H10, H13, H16, J7, K8, K15, K17, L6, L16, M7, N8, N15, P6, P16, P17, R7, R10, R13, T9, T12, T15, U10, U13, U17	V_{DD_CORE}	**Power Supply for the Core Logic:** +1.8 V
F9, F12, F15, G6, G10, G13, G16, H7, H11, H14, J6, J8, J15, J17, K16, L7, M6, M8, M15, M17, N16, P7, P8, P15, R6, R11, R14, R17, T10, T16, U7, U9, U12, U15	V_{DD_IO}	**Power Supply for the I/O:** +3.3 V
F6, F16, G7, G8, G11, G14, G17, H8, H9, H12, H15, J9, J10, J11, J12, J13, J14, J16, K7, K9, K10, K11, K12, K13, K14, L8, L9, L10, L11, L12, L13, L14, L15, M9, M10, M11, M12, M13, M14, M16, N6, N7, N9, N10, N11, N12, N13, N14, P9, P10, P11, P12, P13, P14, R8, R9, R12, R15, R16, T2, T7, T8, T11, T13, T14, T17, U6	V_{SS}	**Ground**
A2, E5, C1, C2, H2, H1, M1, P1, P4, W1, U4, W4, AB2, AA5, W9, AA9, U11, AA14, Y16, AB20, V17, AA21, W21, V22	STiA0-23	**Serial TDM Input Data 'A' Streams (5 V Tolerant Input with Internal Pull-down)** The data rate of these input streams can be selected in a group of 4 to be either 8.192 Mbps, 16.384 Mbps, 32.678 Mbps or 65.536 Mbps. Refer to Section 1.5 for rate programming options. The data streams can be selected to be either inverted or non-inverted, programmed by the Group Control Registers, see Section 14.4. Unused inputs are pulled low by internal pull-down resistors and may be left unconnected.
E7, C3, G4, J5, K6, J1, M2, P2, R5, V2, T5, Y3, W6, V8, Y8, AB9, AA11, AB15, V15, Y18, Y19, AB22, Y22, R20	STiB0-23	**Serial TDM Input Data 'B' Streams (5 V Tolerant Input with Internal Pull-down)** The data rate of these input streams can be selected in a group of 4 to be either 8.192 Mbps, 16.384 Mbps or 32.678 Mbps. The stream is unused when its input group rate is 65.536 Mbps. Refer to Section 1.5 for rate programming options. The data streams can be selected to be either inverted or non-inverted, programmed by the Group Control Registers (Section 14.4). Unused inputs are pulled low by internal pull-down resistors and may be left unconnected.

Pin Description (continued)

Pin	Name	Description
D6, F5, E3, D1, J3, L5, M3, M4, U1, U3, AA1, AA2, V7, W8, AB6, V10, AB11, Y14, AB18, U16, AB21, W20, U20, P19	STiC0-23	**Serial TDM Input Data 'C' Streams (5 V Tolerant Input with Internal Pull-down)** The data rate of these input streams can be selected in a group of 4 to be either 8.192 Mbps or 16.384 Mbps. The stream is unused when its input group rate is 65.536 Mbps or 32.678 Mbps. Refer to Section 1.5 for rate programming options. The data streams can be selected to be either inverted or non-inverted, programmed by the Group Control Registers (Section 14.4). Unused inputs are pulled low by internal pull-down resistors and may be left unconnected.
C4, B2, D2, H3, E1, K2, L4, R1, V1, T4, W3, AB1, AA4, Y7, AB7, Y10, AB12, AB16, AB19, W17, W19, U19, R19, T21	STiD0-23	**Serial TDM Input Data 'D' Streams (5 V Tolerant Input with Internal Pull-down)** The data rate of these input streams can be selected in a group of 4 to be either 8.192 Mbps or 16.384 Mbps. The stream is unused when its input group rate is 65.536 Mbps or 32.678 Mbps. Refer to Section 1.5 for rate programming options. The data streams can be selected to be either inverted or non-inverted, programmed by the Group Control Registers (Section 14.4). Unused inputs are pulled low by internal pull-down resistors and may be left unconnected.
B3, E4, H5, J4, K5, M5, N5, N4, P5, Y1, Y2, W5, Y5, V9, AA8, AA10, AA12, AA15, U14, V16, Y20, T18, V21, P18	SToA0-23	**Serial TDM Output Data 'A' Streams (5 V Tolerant, 3.3 V Tri-state Slew-Rate Controlled Outputs)** The data rate of these output streams can be selected in a group of 4 to be either 8.192 Mbps, 16.384 Mbps, 32.678 Mbps or 65.536 Mbps. Refer to Section 1.5 for rate programming options. The data streams can be selected to be either inverted or non-inverted, programmed by the Group Control Registers (Section 14.4).
D5, B1, F3, E2, F1, K1, N1, P3, R4, W2, V4, V6, AB3, AA6, Y9, AB10, V11, W14, Y17, AA19, V18, Y21, W22, U22	SToB0-23	**Serial TDM Output Data 'B' Streams (5 V Tolerant, 3.3 V Tri-state Slew-Rate Controlled Outputs)** The data rate of these output streams can be selected in a group of 4 to be either 8.192 Mbps, 16.384 Mbps or 32.678 Mbps. The stream is unused when its output group rate is 65.536 Mbps. Refer to Section 1.5 for rate programming options. The data streams can be selected to be either inverted or non-inverted, programmed by the Group Control Registers (Section 14.4). Unused outputs are tristated and may be left unconnected.
E6, D3, H4, F2, K4, L3, N2, R2, T3, V3, U5, Y4, U8, AB5, AB8, W11, V12, Y15, W16, AA20, U18, V20, T20, T22	SToC0-23	**Serial TDM Output Data 'C' Streams (5 V Tolerant, 3.3 V Tri-state Slew-Rate Controlled Outputs)** The data rate of these output streams can be selected in a group of 4 to be either 8.192 Mbps or 16.384 Mbps. The stream is unused when its output group rate is 65.536 Mbps or 32.678 Mbps. Refer to Section 1.5 for rate programming options. The data streams can be selected to be either inverted or non-inverted, programmed by the Group Control Registers (Section 14.4). Unused outputs are tristated and may be left unconnected.

Pin Description (continued)

Pin	Name	Description
D4, F4, G3, G2, G1, L2, N3, T1, U2, T6, V5, AA3, W7, AA7, W10, Y11, Y12, AB17, AA18, W18, V19, AA22, U21, N17	SToD0-23	**Serial TDM Output Data 'D' Streams (5 V Tolerant, 3.3 V Tri-state Slew-Rate Controlled Outputs)** The data rate of these output streams can be selected in a group of 4 to be either 8.192 Mbps or 16.384 Mbps. The stream is unused when its output group rate is 65.536 Mbps or 32.678 Mbps. Refer to Section 1.5 for rate programming options. The data streams can be selected to be either inverted or non-inverted, programmed by the Group Control Registers (Section 14.4). Unused outputs are tristated and may be left unconnected.
W12	$\overline{\text{CKi0}}$	**ST-BUS/GCI-Bus Clock Input (5 V Tolerant Schmitt-Triggered Input)** This pin accepts an 8.192 MHz, 16.384 MHz, 32.678 MHz or 65.536 MHz clock. This clock must be provided for correct operation of the ZL50070. The frequency of the $\overline{\text{CKi0}}$ input is selected by the CK_SEL1-0 inputs. The active clock edge may be either rising or falling, programmed by the Input Clock Control Register (Section 14.5).
AA13	$\overline{\text{FPi0}}$	**ST-BUS/GCI-Bus Frame Pulse Input (5 V Tolerant Input)** This pin accepts the 8 kHz frame pulse which marks the frame boundary of the TDM data streams. The pulse width is nominally one $\overline{\text{CKi0}}$ clock period (assuming ST-BUS mode) selected by the CK_SEL1-0 inputs. The active state of the frame pulse may be either high or low, programmed by the Input Clock Control Register (Section 14.5).
J2, G21	$\overline{\text{CKi1-2}}$	**ST-BUS/GCI-Bus Clock Inputs (5 V Tolerant Schmitt Triggered Inputs)** These optional TDM clock inputs are at 8.192 MHz, 16.384 MHz, 32.678 MHz or 65.536 MHz. The frequency of each clock input is automatically detected by the ZL50070. Refer to Section 2.0 for TDM timing options. The active clock edge may be either rising or falling, programmed by the Input Clock Control Register (Section 14.5). Unused inputs must be connected to a defined logic level.
K3, K19	$\overline{\text{FPi1-2}}$	**ST-BUS/GCI-Bus Frame Pulse Inputs (5 V Tolerant Inputs)** These 8 kHz input pulses correspond to the optional $\overline{\text{CKi2-1}}$ clock inputs. The frame pulses mark the frame boundary of the TDM data streams. Refer to Section 2.0 for TDM timing options. Each pulse width is nominally one $\overline{\text{CKi}}$ clock period (assuming ST-BUS mode). The active state of the frame pulse may be either high or low, programmed by the Input Clock Control Register (Section 14.5). Unused inputs must be connected to a defined logic level.

Pin Description (continued)

Pin	Name	Description
A1, AB4, R18, E14	$\overline{CKo}$0-3	**ST-BUS/GCI-Bus Clock Outputs (3.3 V Outputs with Slew-Rate Control)** These clock outputs can be programmed to generate 8.192 MHz, 16.384 MHz, 32.678 MHz or 65.536 MHz TDM clock outputs. The active edge can be programmed to be either rising or falling. The source of the clock outputs can be derived from either the $\overline{CKi}$2-0 inputs or the internal system clock. The frequency, active edge and source of each clock output can be programmed independently by the Output Clock Control Register (Section 14.6). For 65.536 MHz output clock, the total loading on the output should not be larger than 10pF.
G5, Y6, T19, C17	$\overline{FPo}$0-3	**ST-BUS/GCI-Bus Frame Pulse Outputs (3.3 V Outputs with Slew-Rate Control)** These 8 kHz output pulses mark the frame boundary of the TDM data streams. The pulse width is nominally one clock period of the corresponding $\overline{CKo}$ output. The active state of each frame pulse may be either high or low, independently programmed by the Output Clock Control Register (Section 14.6).
W15, V14	CK_SEL0-1	**Master Clock Input Select (5 V Tolerant Inputs)** Inputs used to select the frequency and frame alignment of $\overline{CKi}$0 and $\overline{FPi}$0: CK_SEL1 = 0, CK_SEL0 = 0, 8.192 MHz CK_SEL1 = 0, CK_SEL0 = 1, 16.384 MHz CK_SEL1 = 1, CK_SEL0 = 0, 32.768 MHz CK_SEL1 = 1, CK_SEL0 = 1, 65.536 MHz
L1	ODE	**Output Drive Enable (5 V Tolerant Input with Internal Pull-up)** This is the asynchronous output enable control for the output streams. When it is high, the streams are enabled. When it is low, the output streams are tristated.
A18, B20, B22, C18, C21, C22, D17, D20, E16, E19, E21, E22, F20,F22, G19, G20, G22, H19, H21, H22, J20, J21, K22, L18, L19, L20, M18, M19, M22, N19, N21, N22, R3, R21, R22, P20, V13, W13, Y13, AA16, AA17	IC	**Internal Connections** In normal mode these pins **MUST** be connected low.
A21, B19, C20, D16, D19, D21, D22, E18, E20, F14, F18, F19, F21, G18, H17, H18, H20, J18, J19, J22, K18, K20, K21, L17, L21, L22, M20, M21, N18, N20, P21, P22, AB13, AB14	NC	**No Connection** In normal mode these pins **MUST** be left unconnected.

Pin Description (continued)

Pin	Name	Description
Microprocessor Port and Reset		
A11, C11, E11, B11, A10, B10, C10, A9, D10, B9, F11, A8, C9, B8, E10, A7, A6, D9, E9, C8, A5, B6, C7, D8, E8, A4, B5, C6, D7, F8, A3, B4	D0-31	**Microprocessor Port Data Bus (5 V Tolerant Bi-directional with Slew-Rate Output Control)** 32 or 16 bit bidirectional data bus. Used for microprocessor access to internal memories and registers. When 16 bit mode is selected (D16B is logic 1), D31-16 are unused and must be connected to defined logic levels.
B16, A17, A16, C14, E13, D13, B15, A15, B14, C13, A14, B13, E12, D12, A13, C12, D11, B12, A12	A0-18	**Microprocessor Port Address Bus (5 V Tolerant Inputs)** 19 bit address bus for the internal memories and registers. In 16 bit bus mode (D16B is logic 1), please note A0 is not used and must be connected to a defined logic level. In Intel 32 bit mode: A1 = BE_3, A0 = BE_2
C16	$\overline{CS}$	**Chip Select Input (5 V Tolerant Input)** Active low input used with $\overline{DS}$ to enable read and write access to the ZL50070.
D14	$\overline{DS}$	**Data Strobe Input (5 V Tolerant Input)** Active low input used with $\overline{CS}$ to enable read and write access to the ZL50070.
C15	R/$\overline{W}$	**Read/Write Input (5 V Tolerant Input)** This input controls the direction of the data bus lines (D31 - 0) during a microprocessor access. This pin is set high and low for the read and write access respectively.
A19	$\overline{DTA}$	**Data Transfer Acknowledge (5 V Tolerant, 3.3 V Tri-state Output with Slew-Rate)** This active low output indicates that a data bus transfer is complete. Usually used with a Motorola interface. An external pull-up resistor is required to hold this pin HIGH when output is high-impedance.
B17	$\overline{BERR}$	**Transfer Bus Error Output with Slew Rate Control (5 V Tolerant, 3.3 V Tri-state Outputs with Slew-Rate Control)** This pin goes low whenever the microprocessor attempts to access an invalid memory space inside the device. In Motorola bus mode, if this bus error signal is activated, the data transfer acknowledge signal, $\overline{DTA}$, will not be generated. In Intel bus mode, the generation of the $\overline{DTA}$ is not affected by this $\overline{BERR}$ signal. An external pull-up resistor is required to hold a HIGH level when output is high-impedance.
D15	$\overline{WAIT}$	**Data Transfer Wait Output (5 V Tolerant, 3.3 V Tri-state Output with Slew Rate)** Active low wait signal output. It indicates that a data bus transfer is complete when it goes from low to high. Usually used with an Intel interface. An external pull-up resistor is required to hold this pin HIGH when output is high-impedance.

Pin Description (continued)

Pin	Name	Description
B18, E15	SIZ0-1	**Data Transfer Size/Upper and Lower Data Strobe Inputs (5 V Tolerant Inputs)** Motorola 32-bit mode - signals indicate data transfer size, refer to Section 10.0. Motorola 16-bit mode:SIZ0 - $\overline{LDS}$, SIZ1 - $\overline{UDS}$. Active low upper and lower data strobes, $\overline{UDS}$ and $\overline{LDS}$, indicate whether the upper byte, D15 - 8, and/or lower byte, D7 - 0, is being accessed. Intel 32/16-bit mode: SIZ0 - $\overline{BE0}$, SIZ1 - $\overline{BE1}$. Active low Intel type bus-enable signals, $\overline{BE1}$ and $\overline{BE0}$
C5	IM	**Microprocessor Port Bus Mode Select (5 V Tolerant Input)** Control input: 0 = Motorola mode 1 = Intel mode
B7	D16B	**Microprocessor Port Bus 16/32 Bit Mode Select (5 V Tolerant Input with Internal Pull-down)** Control input: 0 = 32 bit data bus 1 = 16 bit data bus
A20	$\overline{PWR}$	**Device Reset (5 V Tolerant Schmitt-Triggered Input)** Asynchronous reset input used to initialize the ZL50070. 0 = Reset 1 = Normal See Section 11.0, Power-up and Initialization of the ZL50070 for detailed description of Reset state.
IEEE 1149.1 Test Access Port (TAP)		
D18	TDi	**Test Data (5 V Tolerant Input with Internal Pull-up)** Serial test data input. When not used, this input may be left unconnected.
B21	TDo	**Test Data (3.3 V Output)** Serial test data output
A22	TCK	**Test Clock (5 V Tolerant Schmitt-Triggered Input with Internal Pull-up)** Provides the clock to the JTAG test logic
C19	$\overline{TRST}$	**Test Reset (5 V Tolerant Schmitt-Triggered Input with Internal Pull-up)** Asynchronously initializes the JTAG TAP controller by putting it in the Test-Logic-Reset state. This pin should be pulsed low during power-up to ensure that the device is in the normal functional mode. When JTAG is not being used, this pin should be pulled low during normal operation.
E17	TMS	**Test Mode Select (5 V Tolerant Input with Internal Pull-up)** JTAG signal that controls the state transitions of the TAP controller. When not used, this pin is pulled high by an internal pull-up resistor and may be left unconnected.

1.0 Functional Description

1.1 Overview

The device has 96 ST-BUS/GCI-Bus inputs (STiA0 - 23, STiB0 - 23, STiC0 - 23, STiD0 - 23) and 96 ST-BUS/GCI-Bus outputs (SToA0 - 23, SToB0 - 23, SToC0 - 23, SToD0 - 23). It is a non-blocking digital switch with 24,576 64 kbps channels and is capable of performing rate conversion between groups of 4 inputs and 4 outputs. The inputs accept serial input data streams with data rates of 8.192 Mbps, 16.384 Mbps, 32.768 Mbps or 65.536 Mbps. There are 24 input groups with each group consisting of 4 streams (‘A’, ‘B’, ‘C’ and ‘D’). Each group can be set to any of the data rates. The outputs deliver serial data streams with data rates of 8.192 Mbps, 16.384 Mbps, 32.768 Mbps or 65.536 Mbps. There are 24 output groups with each group consisting of 4 streams (‘A’, ‘B’, ‘C’ and ‘D’). Each group can be set to any of the data rates.

By using Zarlink’s message mode capability, the microprocessor can store data in the connection memory which can be broadcast to the output streams on a per-channel basis. This feature is useful for transferring control and status information for external circuits or other ST-BUS/GCI-Bus devices.

The ZL50070 uses the ST-BUS/GCI-Bus master input frame pulse ($\overline{FPi0}$) and the ST-BUS/GCI-Bus master input clock ($\overline{CKi0}$) to define the input frame boundary and timing for sampling the ST-BUS/GCI-Bus input streams with various data rates (8.192 Mbps, 16.384 Mbps, 32.768 Mbps or 65.536 Mbps). The rate of the input clock is defined by setting the CK_SEL1 - 0 pins. In addition, two more frame pulses and clocks can be accepted. The frequencies of these signals are automatically detected by the ZL50070.

A selectable Motorola or Intel compatible non-multiplexed microprocessor port allows users to program the device to operate in various modes under different switching configurations. Users can use the microprocessor port to perform internal register and memory read and write operations. The microprocessor port can be selectable to be either a 32 bit or 16 bit data bus and to have either a 19 bit or 17 bit address bus. This is selected by setting the D16B pin. There are seven control signals ($\overline{CS}$, $\overline{DS}$, R/$\overline{W}$, $\overline{DTA}$, $\overline{WAIT}$, $\overline{BERR}$ and IM).

The device supports the mandatory requirements for the IEEE1149.1 (JTAG) standard via the test port.

1.2 Switch Operation

The ZL50070 switches 64 kbps and Nx64 kbps data and voice channels from the TDM input streams, to timeslots in the TDM output streams. The device is non-blocking; all 24 K input channels can be switched through to the outputs. Any input channel can be switched to any available output channel.

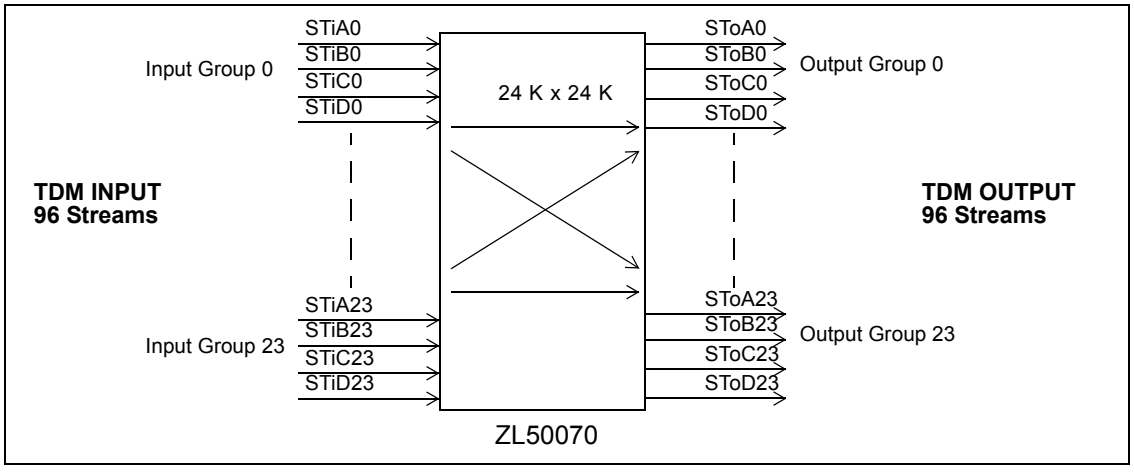

Figure 2 - 24 K x 24 K Channel Basic Switch Configuration

The maximum channel switching capacity is determined by the number of streams and their rate of operation, as shown in Table 1.

TDM Group Data Rate	Maximum Number of Input TDM Data Streams	Maximum Number of Output TDM Data Streams	Number of 64 kbps Channels per Stream	Maximum Switch Capacity† (streams x channels = total)
65.536 Mbps	24	24	1024	24 x 1024 = 24,576
32.768 Mbps	48	48	512	48 x 512 = 24,576
16.384 Mbps	96	96	256	96 x 256 = 24,576
8.192 Mbps	96	96	128	96 x 128 = 12,288‡

Table 1 - Data Rate and Maximum Switch Size

† The maximum capacity shown is when all streams are at the same rate, and none are operating at 8.192 Mbps

‡ Switch capacity is limited to less than 24 K channels, only when streams are provisioned at 8 Mbps. The maximum switch capacity in this case is given by 24,576 - (N x 128), where N is the number of 8 Mbps input or output streams.

1.3 Stream Provisioning

The ZL50070 is a large switch with a comprehensive list of user configurable, 'per-group' programmable features. In order to facilitate ease of use, the ZL50070 offers a simple programming model. Streams are grouped in sets of four, with each group sharing the same configured characteristics. In this way it is possible to reduce programming complexity, while still maintaining flexible 'per-group' configuration options:

- Input and output rate selection; see Section 1.4
- Input stream clock source selection; see Section 2.0
- Output stream clock source selection; see Section 2.0
- Input stream sampling point selection; see Section 5.1
- Output stream fractional bit advance; see Section 5.2
- Input and output stream inversion control; see Section 14.4

The streams are grouped, one from the TDM 'A' streams, combined with the corresponding 'B', 'C' and 'D' streams. For example, input stream group #12 is STiA12, STiB12, STiC12, STiD12, and output stream group #4 is SToA4, SToB4, SToC4, SToD4. There are 24 input and 24 output groups. Depending on the data rate set for the group there will be between 1 and 4 streams activated. If the data rate is set for 65.536 Mbps, the 'A' stream will be activated and the 'B', 'C' and 'D' streams will not be activated. If the data rate is set for 32.768 Mbps, the 'A' and 'B' streams will be activated and the 'C' and 'D' streams will not be activated. If the data rate is set for either 16.384 Mbps or 8.192 Mbps all of the streams, 'A', 'B', 'C' and 'D' will be activated. The maximum channel capacity of a group is 1024 channels when operating at any data rate except for 8.192 Mbps, in which case the maximum operating channel capacity decreases to 512 channels.

1.4 Input and Output Rate Selection

Table 1 shows the maximum number of streams available at different bit rates. The ZL50070 deactivates unused streams when operating at the higher bit rates as shown in Table 2.

Input or Output Group n (n = 0 - 23)	65 Mbps	32 Mbps	16 Mbps	8 Mbps
STiAn / SToAn	Active	Active	Active	Active
STiBn / SToBn	Not Active/tri-stated	Active	Active	Active
STiCn / SToCn	Not Active/tri-stated	Not Active/tri-stated	Active	Active
STiDn / SToDn	Not Active/tri-stated	Not Active/tri-stated	Active	Active

Table 2 - TDM Stream Bit Rates

For 65 Mbps operation, only those inputs and outputs in the TDM 'A' streams are active. For 32 Mbps operation, only those inputs and outputs in the TDM 'A' and 'B' streams are active. For 16 Mbps and 8 Mbps, inputs and outputs in TDM 'A', 'B', 'C' and 'D' streams are active.

Note that if the internal system clock is not used as the clock source, there are limitations on the maximum data rate. See Figure 2.0 for more details.

1.4.1 Per Group Rate Selection

See Section 14.4, Group Control Registers, for programming details. The data rates are set with the Input Stream Bit Rate (bits 3 - 2) and the Output Stream Bit Rate (bits 19 - 18) in the Group Control Registers 0 - 23 (GCR0 - 23)

For the ZL50070, the bit rates of the inputs and outputs are programmed independently, in groups of 4 streams. Depending on the rate programmed, the active streams in the group will be as indicated in Table 2.

For example:

- if input stream group #1 is programmed for 65 Mbps: STiA1 is active; STiB1, STiC1, STiD1 are not active
- if output stream group #15 is programmed for 32 Mbps: SToA15 and SToB15 are active; SToC15 and SToD15 are not active (outputs are tri-stated)
- if input stream group #23 is programmed for 16 Mbps or 8 Mbps, STiA23, STiB23, STiC23, STiD23 are all active

An example of ZL50070 mixed rate provisioning is given in Figure . In this example, the output streams follow the same data rate as the input streams. The example shows that it is possible to have different groups operating at different data rates. The first eight groups are operating in 65.536 Mbps mode (8192 channels - 8 streams), the next eight groups are operating in 32.768 Mbps (8192 channels - 16 streams with two streams in each group) and the remaining eight groups are operating in 16.384 Mbps (8192 channels - 32 streams with four streams per group). This results in the full capacity usage of the ZL50070.

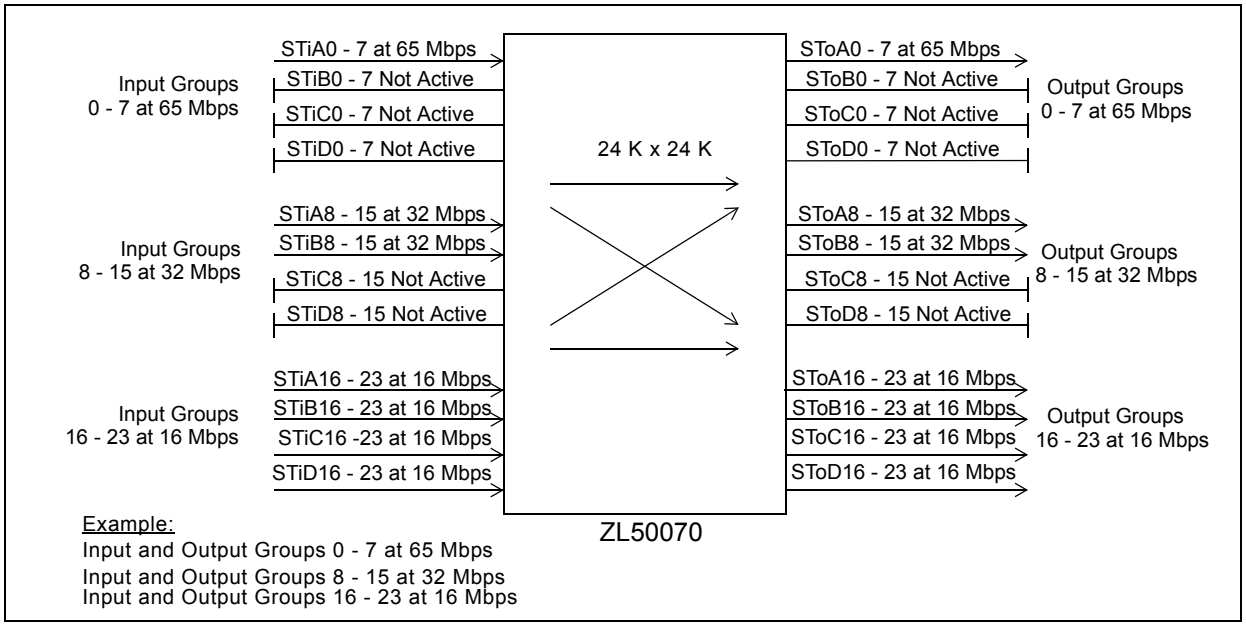

Figure 3 - ZL50070 24 K x 24 K Channel and Stream Provisioning Example at Multiple Rates

Note:Although this example shows the same rate provisioned for corresponding STi and STo streams, programming of input and outputs is independent and different settings are possible.

1.5 Rate Conversion

The ZL50070 supports rate conversion from any input stream rate to any output stream rate.

An example of ZL50070 rate conversion is given in Figure . Here the total capacity of both the input and the output is 24,576 channels. The output stream rates do not have to follow the input stream rates. In this example, on the input side of the switch you have 16 streams operating at 65.536 Mbps (16,384 channels - 16 groups with 1 stream in each group), 8 streams operating at 32.768 Mbps (4096 channels - 4 groups with 2 streams in each group) and 16 streams operating at 16.384 Mbps (4096 channels - 4 groups with 4 streams in each group) with no streams operating at 8.192 Mbps. This results in a maximum input capacity of 24,576 input channels. As the output streams do not have to follow the input streams, they can be configured so that 8 streams operate at 65.536 Mbps (8192 channels - 8 groups with 1 stream in each group), 24 streams operate at 32.768 Mbps (12,288 channels - 12 groups with 2 streams in each group), 16 streams operate at 16.384 Mbps (4096 channels - 4 groups with 4 streams in each group) and no streams at 8.192 Mbps. This results in a maximum output capacity of 24,576 output channels. The reason that no stream is operating at 8.192 Mbps is that as soon as one group is set to this data rate, the capacity of the device will be less than the full 24,576 channels.

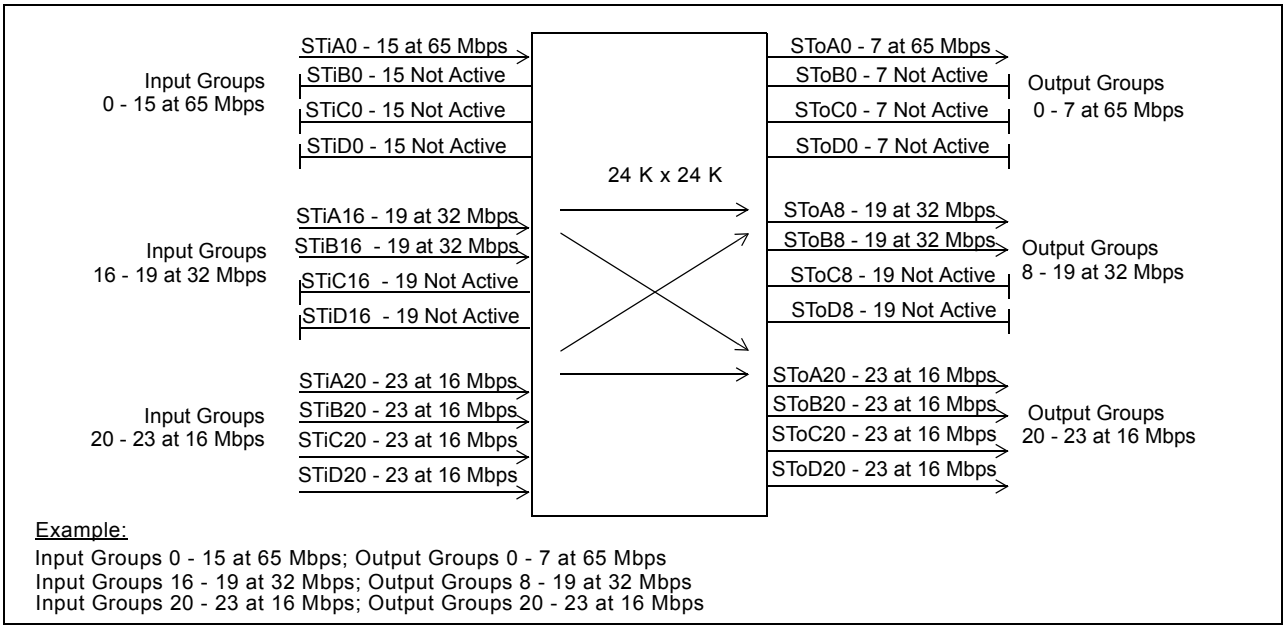

Figure 4 - Input and Output Data Rate Conversion Example

2.0 Input Clock ($\overline{CKi}$) and Input Frame Pulse ($\overline{FPi}$) Timing

The input timing for the ZL50070 can be set for one of four different frequencies. They can also be set for ST-BUS or GCI-Bus mode with positive or negative input. The $\overline{CKi0}$ and $\overline{FPi0}$ input timing must be provided in order for the device to be used. There are two additional input clocks and frame pulses that can be provided. $\overline{CKi0}$ is used to generate the internal clock. This clock is used for all the internal logic and can be used as one of the clocks that defines the timing for the input and output data. The input stream clock source is selected by the ISSRC1 - 0 (bits 1 - 0) in the Group Control Register. The output stream clock source is selected by the OSSRC1 - 0 (bits 17 - 16) in the Group Control Register.

The $\overline{CKi0}$ and $\overline{FPi0}$ input frequency is set via the CK_SEL1 - 0 pins as shown in Table 3. By default the $\overline{CKi0}$ and $\overline{FPi0}$ pins accept ST-BUS, negative input timing. The input frame pulse format (ST-BUS/GCI-Bus), frame pulse polarity, and clock polarity can be programmed by the GCISEL0 (bit 2), FPIPOL0 (bit 1), and CKIPSL0 (bit 0) in the Input Clock Control Register (ICCR), as described in Section 14.5.

CK_SEL1	CK_SEL0	Input $\overline{CKi0}$ and $\overline{FPi0}$
0	0	8.192 MHz
0	1	16.384 MHz
1	0	32.768 MHz
1	1	65.536 MHz

Table 3 - $\overline{CKi0}$ and $\overline{FPi0}$ Setting via CK_SEL1 - 0

Two additional input clocks ($\overline{CKi}$2 - 1) and frame pulses ($\overline{FPi}$2 - 1) can be accepted. These signals can be 8.192 MHz, 16.384 MHz, 32.768 MHz or 65.536 MHz and the rates are automatically detected by the device. These clocks and their frame boundaries must be phase aligned with the $\overline{CKi}$0 and its frame boundary within a 30 ns skew but can have different jitter values. The clocks do not have to have the same frequency. If these additional clocks are not used, the pins must be connected to a defined logic level.

These additional input clocks and frame pulses can be used as alternative clock sources for the input streams, output streams, and output clocks / frame pulses. The input streams' clock sources are controlled by the ISSRC1-0 (bits 1 - 0) in the Group Control Registers (GCR). The output streams' clock sources are controlled by the OSSRC1-0 (bits 17 - 16) in the Group Control Registers (GCR). The output clocks' / frame pulses' clock sources are controlled by the CKO3SRC1-0 (bits 22-21), CKO2SRC1-0 (bits 15-14), CKO1SRC1-0 (bits 8-7), and CKO0SRC1-0 (bits 1-0) in the Output Clock Control Register (OCCR). The clock sources can be set to either the internal system clock or one of the three input clock signals. These are used to provide a direct interface to jittery peripherals.

When the internal system clock is not used as the clock source, there are limitations to the data rate and the output clock rate. For all the input and output stream groups that do not use the internal system clock as their clock source, the data rate is limited to be no higher than the selected clock source's rate (e.g. if $\overline{CKi1}$ runs at 16.384 MHz and it is selected as the clock source for input stream group 3, then the maximum data rate of STiA3, STiB3, STiC3, and STiD3 is 16.384 Mbps). Similarly, for all the output clocks that do not use the internal system clock as their clock source, the clock rate is limited to be no higher than the selected clock source's rate (e.g. if $\overline{CKi1}$ runs at 32.768 MHz and it is selected as the clock source for output clock $\overline{CKo0}$, then the maximum clock rate of $\overline{CKo0}$ is 32.768 MHz).

3.0 Output Clock ($\overline{CKo}$) and Output Frame Pulse ($\overline{FPo}$) Timing

There are four output timing pairs, $\overline{CKo}$3 - 0 and $\overline{FPo}$3 - 0. By default these signals generate ST-BUS, negative timing, and use the internal system clock as reference clock source. Their default clock rates are 65.536 MHz for $\overline{CKo0}$, 32.768 MHz for $\overline{CKo1}$, 16.384 MHz for $\overline{CKo2}$, and 8.192 MHz for $\overline{CKo3}$. Their properties can also be individually programmed in the Output Clock Control Register (OCCR) to control the frame pulse format (ST-BUS/GCI-Bus), frame pulse polarity, clock polarity, clock rate (8.192 MHz, 16.384 MHz, 32.768 MHz or 65.536 MHz), and reference clock source. Refer to Section 14.6 for programming details. Note that the reference clock source can be set to either the internal system clock or one of the three input clock signals. If one of the three input clock signals is selected as the reference source, the output clock cannot be programmed to generate a higher clock frequency than the reference source. As each output timing pair has its own bit settings, they can be set to provide different output timings. For 65.536 MHz output clock, the total loading on the output should not be larger than 10pF.

4.0 Output Channel Control

To be able to interface with external buffers, the output signals can be set to enter a high impedance or drive high state on a per-channel basis. The Per-Channel Function (bits 31 - 29) in the Connection Memory Bits can be set to 001 to drive the channel output high, or to 000, 110 or 111 to set the channel into a high impedance state.

5.0 Data Input Delay and Data Output Advancement

The Group Control Registers (GCR) are used to adjust the input delay and output advancement for each input and output data groups. Each group is independently programmed.

5.1 Input Sampling Point Delay Programming

The input sampling point delay programming feature provides users with the flexibility of handling different wire delays when incoming traffic is from different sources.

By default, all input streams have zero delay, such that bit 7 is the first bit that appears after the input frame boundary (assuming ST-BUS formatting). The nominal input sampling point with zero delay is at the 3/4 bit time. The input delay is enabled by the Input Sample Point Delay (bit 8 - 4) in the Group Control Registers 0 - 23 (GCR0 - 23) as described in Section 14.4 on page 42. The input sampling point delay can range from 0 delay to 7 3/4 bit delay with a 1/4 bit resolution on a per group basis.

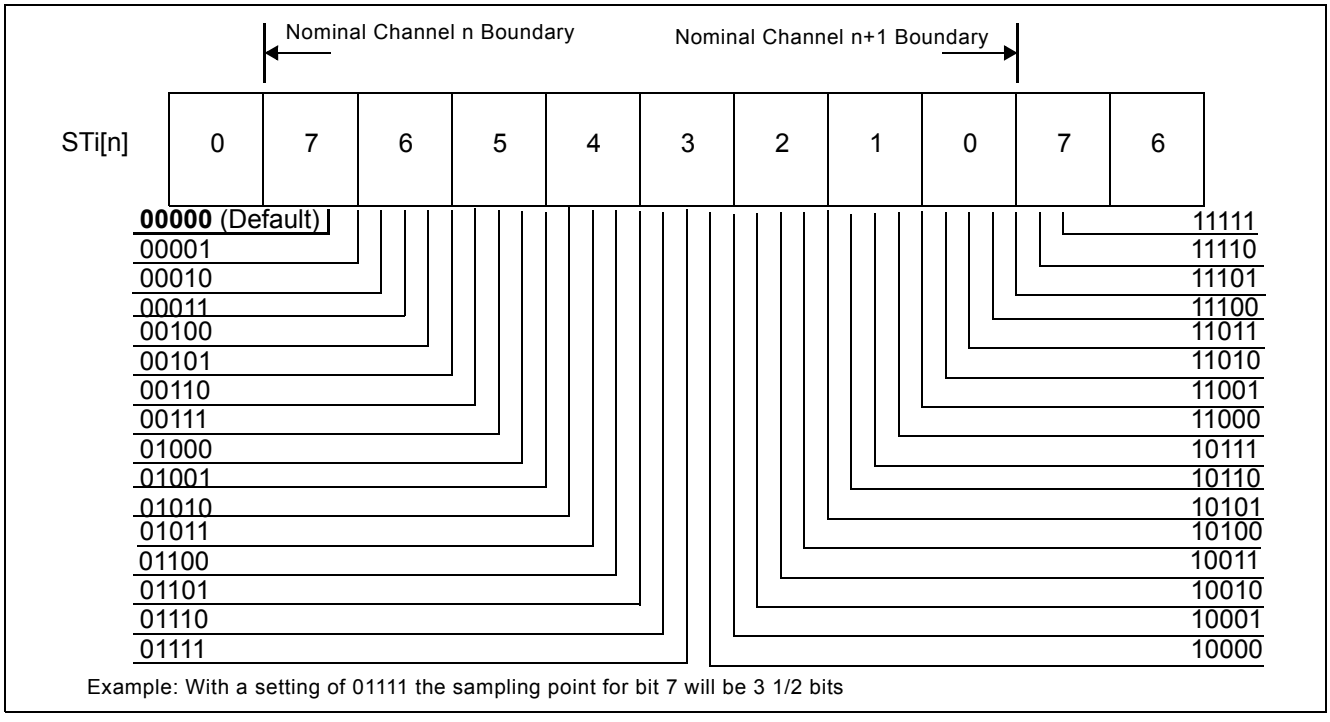

Figure 5 - Input Sampling Point Delay Programming

There are limitations when the ZL50070 is programmed to use $\overline{\text{CKi2}}$ - 0 as the input stream clock source as opposed to the internal clock:

- The granularity of the delay becomes 1/2 the selected reference clock period, or 1/4 bit, whichever is longer
- If the selected reference clock frequency is the same as the stream bit rate, the granularity of the delay is 1/2 bit. In this case, the least significant bit of the ISPD register is not used; the remaining 4 bits select the total delay in 1/2 bit increments, to a maximum of 7 1/2 bits. Also, the 0 bit delay reference point changes from the 3/4 bit position to the 1/2 bit position.

5.2 Fractional Bit Advancement on Output

See Section 14.4, Group Control Registers, for programming details.

This feature is used to advance the output data with respect to the output frame boundary. Each group has its own bit advancement value which can be programmed in the Group Control Registers 0 - 23 (GCR0 - 23).

By default all output streams have zero bit advancement such that bit 7 is the first bit that appears after the output frame boundary (assuming ST-BUS formatting). The output advancement is enabled by the Output Stream Bit Advancement (bits 21 - 20) of the Group Control Registers 0 - 23 (GCR0 - 23), as described in Section 14.4. The output delay can vary from 0 to 22.8 ns with a 7.6 ns increment. The exception to this is output streams programmed at 65 Mbps, in which case the increment is 3.8 ns with a total advancement of 11.4 ns.

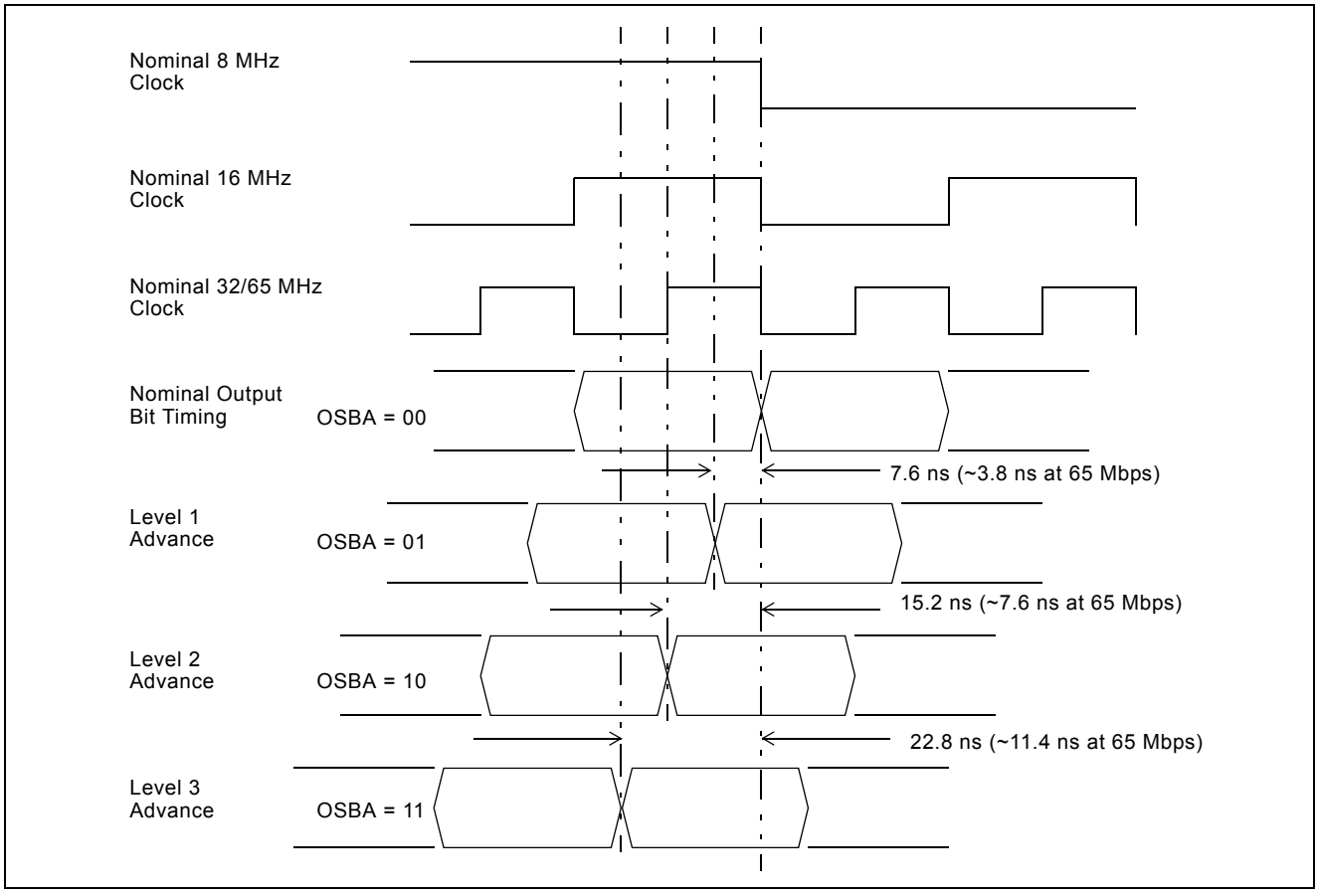

Figure 6 - Output Bit Advancement Timing

This programming feature is provided to assist in designs where per stream routing delays are significant and different.

The OSBA bits in the Group Control Registers are used to set the bit-advancement for each of the corresponding serial output stream groups. Figure 6 illustrates the effect of the OSBA settings on the output timing.

There are limitations when the ZL50070 is programmed to use $\overline{\text{CKi}}$2 - 0 as the output stream clock source:

- If the selected reference clock frequency is 65 MHz or 32 MHz, the granularity of the advancement is reduced to 1/2 the clock period
- If the selected reference clock frequency is 16 MHz or 8 MHz, bit advancement is not available and the output streams are driven at the nominal times

6.0 Message Mode

In Message Mode (MSG), microprocessor data can be broadcast to the output data streams on a per-channel basis. This feature is useful for transferring control and status information to external circuits or other TDM devices.

For a given output channel, when the corresponding Per Channel Function (bits 31 - 29) in the Connection Memory are set to Message Mode (010), the Connection Memory's lowest data byte (bits 7 - 0) is output in the timeslot, in the outgoing timeslot. Refer to Section 14.1.1, Connection Memory Bit Functions, for programming details

To increase programming bandwidth, the ZL50070 has separate addressable 32 bit memory locations, called Connection Memory Least Significant Bytes (LSB), which provide direct access to the Connection Memories' Lowest data bytes (bits 7 - 0). Up to four consecutive message mode channels can be set with one Connection Memory LSB access. Refer to Section 14.1.2, Connection Memory LSB, for programming details.

6.1 Data Memory Read

All TDM input channels can be read via the microprocessor port. This feature is useful for receiving control and status information from external circuits or other TDM devices. Each 32 bit Data Memory access enables up to four consecutive input channels to be monitored. The Data Memory field is read only; any attempt to write to this address range will result in a bus error condition signalled back to the host processor. Refer to Section 14.2, Data Memory, for programming details.

The latency of data reads is up to 3 frames, depending on when the input timeslots are sampled.

6.2 Connection Memory Block Programming

See Section 14.7, Block Init Register, and Section 14.8, Block Init Enable Register, for programming details.

This feature allows for fast initialization of the connection memory after power up. When the block programming mode is enabled, the contents of Block Init Register are written to all Connection Memory Bits. This operation completes in one 125 μs frame. During Connection Memory initialization, all TDM output streams are set to high impedance.

7.0 Data Delay Through the Switching Paths

See Section 14.1.1, Connection Memory Bit Functions, for programming details.

The switching of information from the input serial streams to the output serial streams results in a throughput delay. The device can be programmed to perform timeslot interchange functions with different throughput delay capabilities on a per-channel basis. For voice applications, select variable throughput delay to ensure minimum delay between input and output data. In wideband data application, select constant delay to maintain the frame integrity of the information through the switch. The delay through the device varies according to the type of throughput delay selected by programming the Per-Channel Function (bits 31 - 29) in the Connection Memories. When these bits are set to 011, the channel is in variable delay mode. When they are set to 100, the channel is in constant delay mode.

7.1 Constant Delay Mode

In this mode the frame integrity is maintained in all switching configurations. The delay though the switch is 2 frames - Input Channel + Output Channel. This can result in a minimum delay of 1 frame + 1 channel if the last channel of a stream is switched to the first channel of a stream. The maximum delay is 1 channel short of 3 frames delay. This occurs when the first channel of a stream is switched to the last channel of a stream.

The data throughput delay is expressed as a function of ST-BUS/GCI-Bus frames, input channel number (n) and output channel number (m). The data throughput delay (T) is:

$$T = 2 \text{ frames} + (n - m)$$

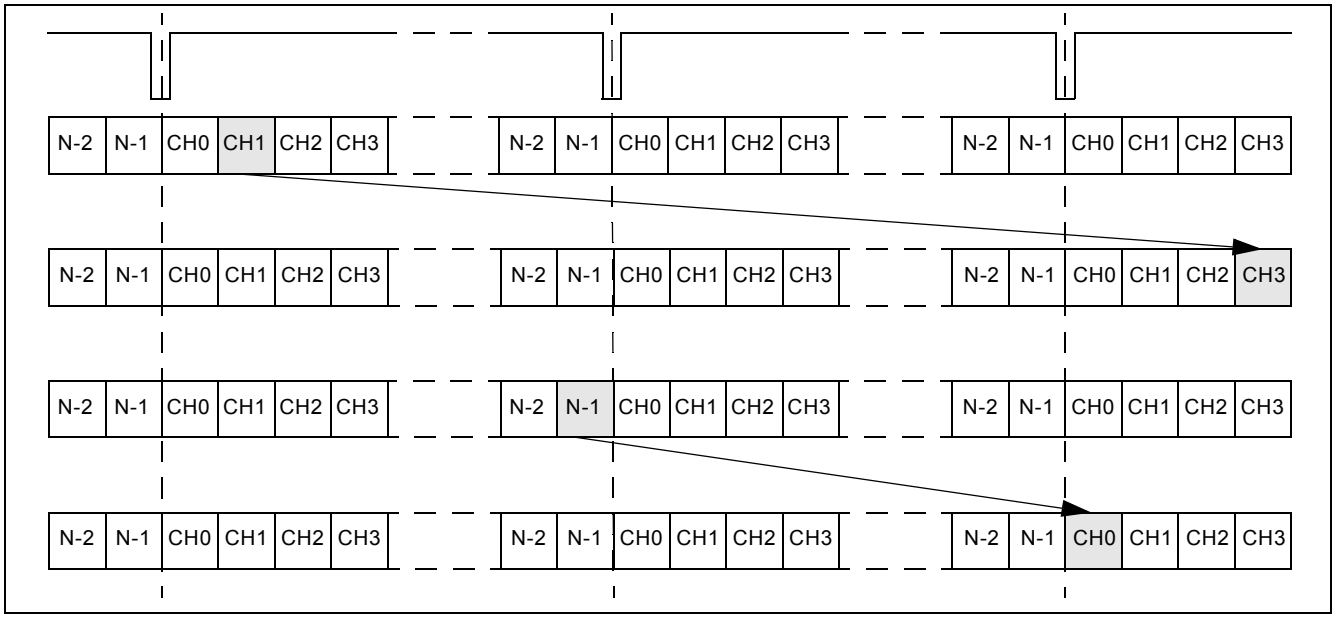

Figure 7 - Data Throughput Delay for Constant Delay

7.2 Variable Delay Mode

Variable delay mode causes the output channel to be transmitted as soon as possible. This is a useful mode for voice applications where the minimum throughput delay is more important than data integrity. The delay through the switch is minimum 3 channels and maximum 1 frame + 2 channels. Channels Available at Various Data Rate.

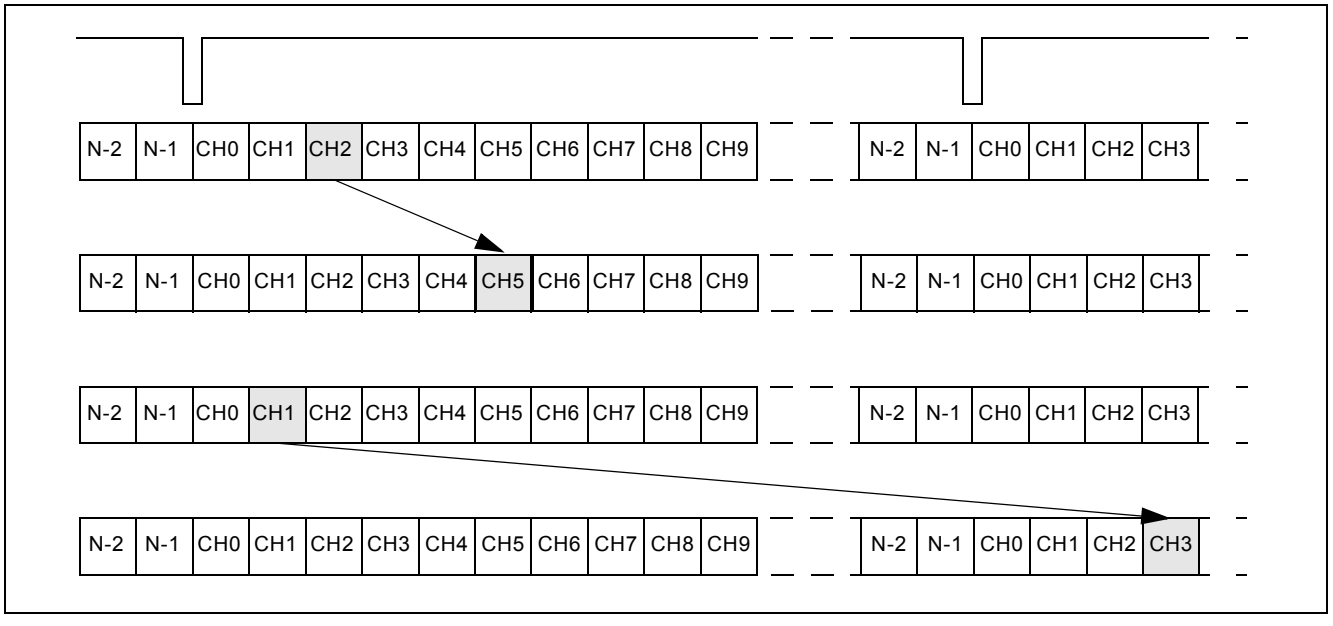

Figure 8 - Data Throughput Delay for Variable Delay

8.0 Per-Channel A-Law/μ-Law Translation

The ZL50070 provides per channel code translation to be used to adapt pulse code modulation (PCM) voice or data traffic between networks which use different encoding laws. Code translation is available in both Connection Modes and Message Mode.

This feature is controlled by the Connection Memories. The $\overline{V}$/D (bit 28) defines if the traffic in the channel is voice or data. The ICL1 - 0 (bits 27 - 26) define the input coding law and the OCL1 - 0 (bits 25 - 24) define the output coding law. The different coding options are shown in Table 4:

Input Coding (ICL1- 0)	Output Coding (OCL1 - 0)	Voice Coding ($\overline{V}$/D bit = 0)	Data Coding ($\overline{V}$/D bit = 1)
00	00	ITU-T G.711 A-Law	No Code
01	01	ITU-T G.711 μ-Law	Alternate Bit Inversion (ABI)
10	10	A-Law without Alternate Bit Inversion (ABI)	Inverted Alternate Bit Inversion (ABI)
11	11	μ-Law without Magnitude Inversion (MI)	All Bits Inverted

Table 4 - Input and Output Voice and Data Coding

For voice coding options, the ITU-T G.711 A-Law and ITU-T G.711 μ-Law are the standard rules for encoding. The A-Law without Alternate Bit Inversion (ABI) is an alternative code that does not invert the even bits (6, 4, 2, 0). The μ-Law without Magnitude Inversion (MI) is an alternative code that does not perform Inversion of magnitude bits (6, 5, 4, 3, 2, 1, 0).

When performing data code options, No Code does not invert the bits. The Alternate Bit Inversion (ABI) option inverts the even bits (6, 4, 2, 0) while the Inverted Alternate Bit Inversion (ABI) inverts the odd bits (7, 5, 3, 1). When All Bits Inverted is selected, all of the bits (7, 6, 5, 4, 3, 2, 1, 0) are inverted.

The input channel and output channel encoding law are configured independently. If the output channel coding is set to be different from the input channel, the ZL50070 performs translation between the two standards. If the input and output encoding laws are set to the same standard, no translation occurs.

9.0 Bit Error Rate Tester

The ZL50070 has one Bit Error Rate (BER) transmitter and one BER receiver for each pair of input and output streams, resulting in 96 transmitters connected to the output streams and 96 receivers associated with the input streams. Each transmitter can generate a BER sequence with a pattern of 2^{15}-1 Pseudo-Random Code (ITU O.151). Each transmitter can start at any location on the stream and will last for a minimum of 1 channel to a maximum of 1 frame time (125 μs). The BER transmitters are enabled by programming the Per Channel Function (bit 31 - 29) to 101 (PRBS Generator mode) in the Connection Memories.

Multiple Connection Memory locations can be programmed for BER tests. These locations are not required to be consecutive. However, when read back, the BER locations must be received in the same order that they were transmitted. If the BER locations are not received in the same order, the BER test will produce errors.

The PRBS bit pattern is sequentially loaded into the output timeslots. An example is shown in Figure .

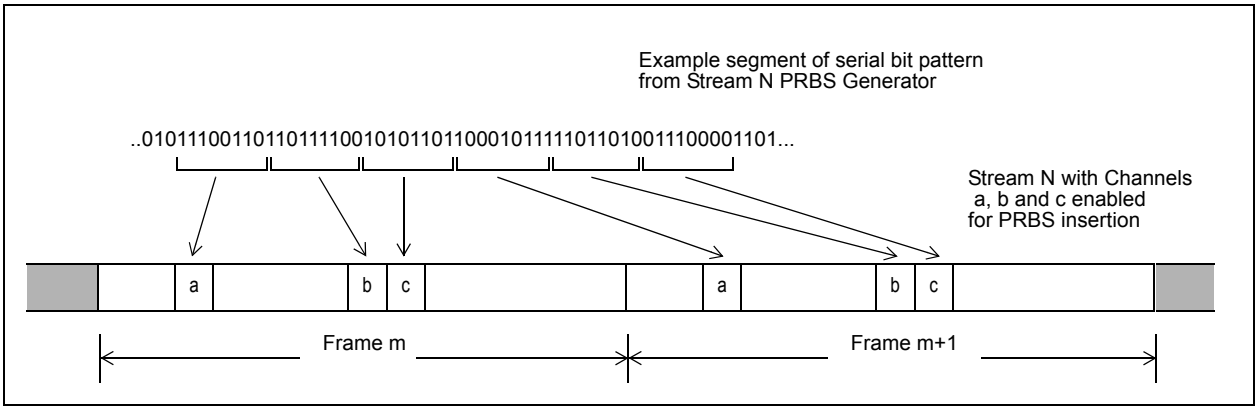

Figure 9 - Example PRBS Timeslot Insertion

Each PRBS detector can be configured to monitor for bit errors in one or more timeslots. The selection of timeslots is configured by the Input BER Enable Control Memory (IBERECM). See Section 14.3.1 for programming details. Each detector has an associated 16 bit error counter accessible via the microprocessor interface, as described in Section 14.3.2, BER Counters. The value of the counter represents the total number of errors detected on the corresponding input stream. Bit errors are accumulated until the counter is either reset (by writing to the counter or by resetting the device), or the counter reaches its maximum value, 65,535 (decimal). If more than 65,535 errors are detected, the counter will hold at the maximum value until reset.

Any number of timeslots may be configured for bit error rate testing; however the user must ensure the following for correct operation of the BER test function:

1. The number of timeslots enabled for PRBS detection on the input stream must equal the number of timeslots enabled for PRBS generation on the source output stream
2. The arrival order of timeslots at the PRBS detector must be the same as the order in which timeslots were transmitted by the PRBS generator. For example, in Figure above, the timeslot order a,b,c must be maintained through the external path from source TDM output stream to destination TDM input stream.

10.0 Microprocessor Port

The ZL50070 has a generic microprocessor port that provides access to the internal Data Memory (read access only), Connection Memory, and Control Registers.

The port size can be configured to be either 32 bit or 16 bit, controlled by the D16B pin.

The port works with either Motorola or Intel type microprocessor buses, selected by the IM pin.

10.1 Addressing

The Data Memory, Connection Memory and Control Registers are assigned 32 bit fields in the ZL50070 memory space. The Address Bus, A18 - 0, controls access to each 32 bit location. Byte addressing is also provided to give the user programming flexibility, if access to less than 32 bits is required.

Each 32 bit memory or register location spans 4 consecutive addresses. Example:

- The 32 bit Group Control Register for TDM Group 0 is located at address range 40200 - 40203 Hex

The Least Significant address identifies the Most Significant Byte (MSB) in the 32 bit field, as illustrated in Table 5.

Address (Hex)	Memory/Register Bits
40200	Bits 31:24 (MSB)
40201	Bits 23:16
40202	Bits 15:8
40203	Bits 7:0 (LSB)

Table 5 - Example of Address and Byte Significance

10.2 32 Bit Bus Operation

In 32 bit mode (D16B = 0), all 32 bits of the Data Bus, D31 - 0, may be used for write and read transfers. D31 on the bus maps to Bit 31 of the internal memory or register, D30 maps to Bit 30, etc. The least significant address bits, A1 - 0, and the Data Transfer Size inputs, SIZ0 - 1, identify which bytes are being accessed.

In Motorola Bus mode (IM = 0), A1 - 0 identify the first byte in the 32 bit field to be transferred, as shown in Table 6. The SIZ0 - 1 inputs indicate the access transfer size, as shown in Table 7.

A1	A0	Byte Addressed
0	0	Bit 31:24
0	1	Bit 23:16
1	0	Bit 15:8
1	1	Bit 7:0

Table 6 - 32 Bit Motorola Mode Byte Addressing

For example, to transfer all 32 bits in a single access: A1 = 0. A0 = 0, SIZ1 = 0, SIZ0 = 0. To transfer D15 - 8 only: A1 = 1, A0 = 0, SIZ1 = 0, SIZ0 = 1.

SIZ1	SIZ0	Access Transfer Size
0	0	4 bytes
0	1	1 Byte
1	0	2 Bytes
1	1	3 Bytes

Table 7 - 32 Bit Motorola Mode Access Transfer Size

In Intel Bus Mode (IM = 1), A1 - 0, and SIZ1 - 0 form active low byte enable signals, consistent with BE3 - 0 available on the Intel i960 processor, as shown in Table 8.

Pin	Equivalent i960 Signal	Byte Addressed
A1	$\overline{BE3}$	Bit 31:24
A0	$\overline{BE2}$	Bit 23:16
SIZ1	BE1	Bit 15:8
SIZ0	BE0	Bit 7:0

Table 8 - 32 Bit Intel Mode Bus Enable Signals

Byte addressing applies only to write accesses. On read cycles, all 32 bits are output on every access.

10.3 16 Bit Bus Operation

In 16 bit mode (D16B = 1), D15 - 0 are used for data transfers to/from the ZL50070. D31 - 16 are unused and must be connected to a defined logic level. D15 on the bus maps to Bit 31 and Bit 15 of the internal 32 bit memory or register, D14 maps to Bit 30 and Bit 14, etc.

In 16 bit mode, the least significant address bit, A0, is not used, and must be connected to defined logic level. In this case, address bit A1 and the Data Transfer Size inputs, SIZ1 - 0, identify which bytes are being accessed.

In Motorola Bus Mode (IM = 0), SIZ1 - 0 form active low data strobe signals, consistent with $\overline{UDS}$ and $\overline{LDS}$ available on the MC68000 and MC68302 processors, as shown in Table 9.

In Intel Bus Mode (IM = 1), SIZ1 - 0 form active low byte enable signals, consistent with $\overline{BE1}$ and $\overline{BE0}$ available on the Intel i960 processor, as shown in Table 9.

Pin Name	Motorola Mode MC68000,MC68302 Equivalent Function IM = 0	Intel Mode i960 Equivalent Function IM = 1	Data Bus Bytes Enabled
SIZ1	$\overline{UDS}$	$\overline{BE1}$	D15-8
SIZ0	$\overline{LDS}$	$\overline{BE0}$	D7-0

Table 9 - Byte Enable Signals

In both Intel and Motorola modes, the A1 address input is used to identify the word alignment in internal memory.

A1 = 0 Bits 31:16

A1 = 1 Bits 15:0

16-bit word alignments are shown in Table 10. An example of byte addressing is given in Table 11.

Microprocessor 16 Bit Data Bus	SIZ1	SIZ0	A1	Internal 32-bit Memory or Register
D15 - 8	0	1	0	Bits 31:24
	0	1	1	Bits 15:8
D7 - 0	1	0	0	Bits 23:16
	1	0	1	Bits 7:0
D15 - 0	0	0	0	Bits 31:16
	0	0	1	Bits 15:0
	1	1	X[1]	No access

Table 10 - 16 Bit Mode Word Alignment

1. X - Don't Care

Address (Hex)	Register Description	Register Byte	A18 - 0 (binary)	SIZ1	SIZ0	Comments
40200 or 40201	Group Control Register (Group 0)	Bits 23:16	100 0000 0010 0000 000X†	1	0	8 bit transfer
40282 or 40283	Input Clock Control Register	Bits 15:8	100 0000 0010 1000 001X†	0	1	8 bit transfer
40286 or 40287	Output Clock Control Register	Bits 15:0	100 0000 0010 1000 011X†	0	0	16 bit transfer
40284 or 40285	Output Clock Control Register	Bits 31:16	100 0000 0010 1000 010X†	0	0	16 bit transfer

Table 11 - 16 Bit Mode Example Byte Address

† Don't Care. A0 is not used

10.4 Bus Operation

10.4.1 Read Cycle

The operation of a read cycle is illustrated in Figure 10.

- The microprocessor asserts the R/$\overline{W}$ control signal high, to signal a read cycle. It also drives the address A, transfer size, SIZ1 - 0, and chip select logic drives the $\overline{CS}$ signal active low to select the ZL50070
- The microprocessor then drives the $\overline{DS}$ signal active low, to signal the start of the bus cycle. The $\overline{DS}$ signal is held low for the duration of the bus cycle
- $\overline{WAIT}$ is asserted active low
- The ZL50070 accesses the requested memory or register location(s), and places the requested data onto the data bus, D31 - 0 (D15 - 0 in 16 bit Mode). All data bus pins are driven, whether or not they are being used for the specific data transfer. Unused pins will present unknown data. If the address is to an unused area of the memory space, unknown data is presented on the data bus
- The ZL50070 then de-asserts $\overline{WAIT}$, and asserts either $\overline{DTA}$ or $\overline{BERR}$, depending on the validity of the data transfer
- When the microprocessor observes the active low state of the $\overline{DTA}$ or the $\overline{BERR}$ signal, or the low-to-high transition of the $\overline{WAIT}$ signal, it terminates the bus cycle by driving the $\overline{DS}$ pin inactive high
- When the ZL50070 sees the $\overline{DS}$ signal go inactive high, it removes the assertions on the $\overline{DTA}$ or $\overline{BERR}$ signals by driving them inactive high
- When the ZL50070 sees the $\overline{CS}$ signal go inactive high, it tri-states the data bus, D31 - 0 (D15 - 0 in 16 bit Mode) and the $\overline{DTA}$, $\overline{BERR}$ and the $\overline{WAIT}$ signals. However, if $\overline{CS}$ goes inactive high before $\overline{DS}$ goes inactive high, the $\overline{DTA}$, $\overline{BERR}$ and $\overline{WAIT}$ signals are driven inactive high before they are tri-stated
- At the end of an Intel bus cycle, $\overline{DTA}$ is always driven low to indicate the end of the data transfer, regardless of $\overline{BERR}$

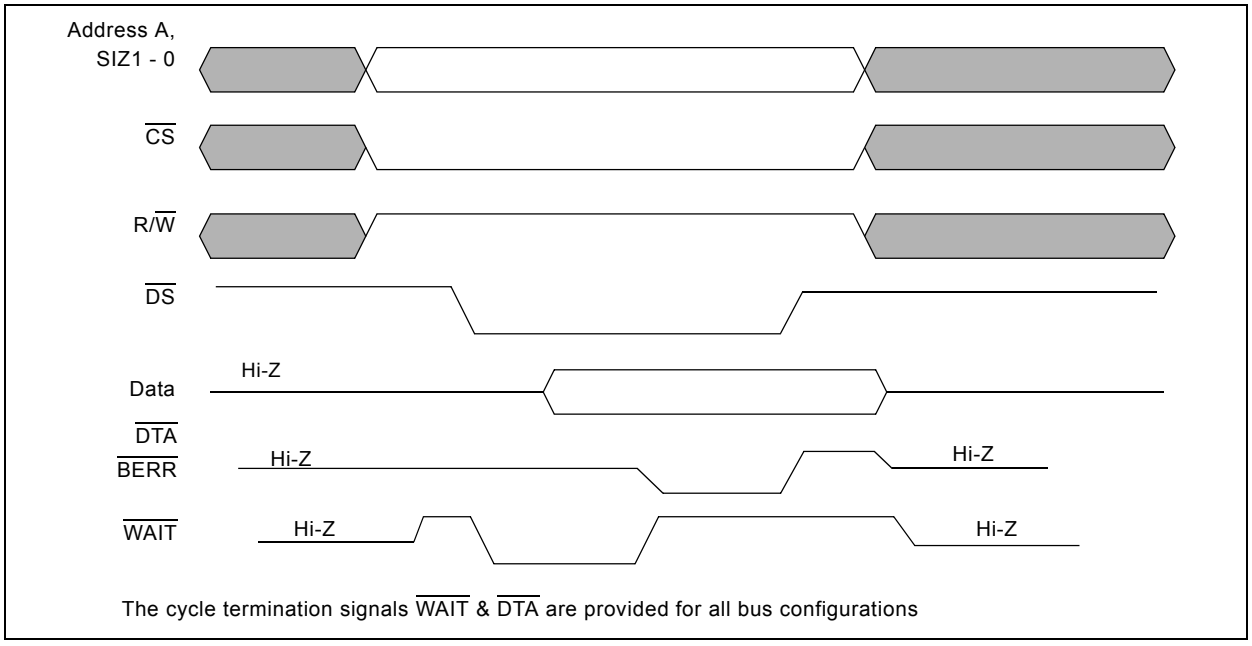

Figure 10 - Read Cycle Operation

10.4.2 Write Cycle

The operation of the write cycle is illustrated in Figure .

- The microprocessor asserts the R/W control signal low, to signal a write cycle. It also drives the address A, data transfer size, SIZ1 - 0, and chip select logic drives the CS signal active low to select the ZL50070
- The microprocessor then drives the data bus, D31 - 0 (D15 - 0 in 16 bit Mode) with the data to be written, and then drives the DS signal active low, to signal the start of the bus cycle. The DS signal is held low for the duration of the bus cycle
- WAIT is asserted active low
- The ZL50070 transfers the data presented on the data bus pins into the indicated memory or register location(s). If the address is to an unused area of the memory space, or to the data memory, no data is transferred. The microprocessor port cannot write to the Data Memory
- The ZL50070 then de-asserts WAIT, and asserts either DTA or BERR, depending on the validity of the data transfer
- When the microprocessor observes the active low state of the DTA or the BERR signal, or the low-to-high transition of the WAIT signal, it terminates the bus cycle by driving the DS pin inactive high
- When the ZL50070 sees the DS signal go inactive high, it removes the assertions on the DTA or BERR signals by driving them inactive high
- When the ZL50070 sees the CS signal go inactive high, it tri-states the DTA, BERR and WAIT signals. However, if CS goes inactive high before DS goes inactive high, the DTA, BERR and WAIT signals are driven inactive high before they are tri-stated
- At the end of an Intel bus cycle, DTA is always driven low to indicate the end of the data transfer, regardless of BERR

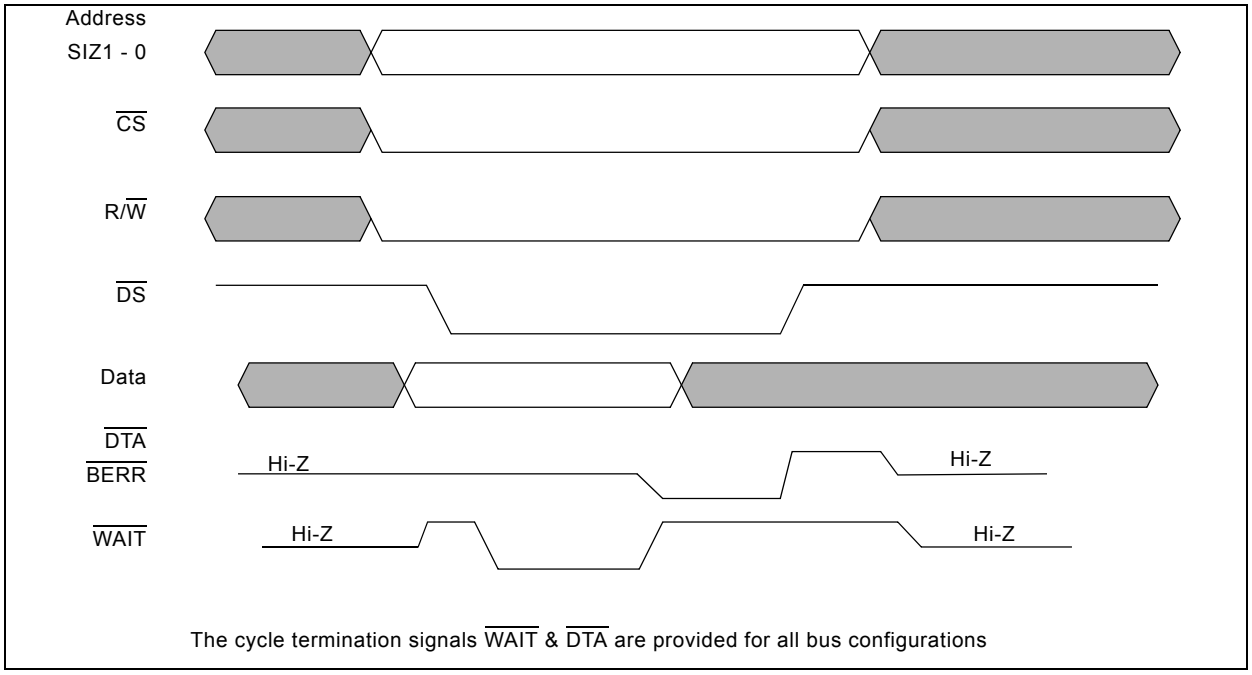

Figure 11 - Write Cycle Operation

11.0 Power-up and Initialization of the ZL50070

11.1 Device Reset and Initialization

The PWR pin is used to reset the ZL50070. When this pin is low, the following functions are performed:

- Asynchronously puts the microprocessor port in a reset state
- Tristates all of the output streams (SToA0 - 23, SToB0 - 23, SToC0 - 23 and SToD0 - 23)
- Preloads all of the registers with their default values (refer to the individual registers for default values)
- Clears all internal counters

11.2 Power Supply Sequencing

The ZL50070 has two separate power supplies: V_{DD_IO} (3.3 V) and V_{DD_CORE} (1.8 V). The recommended power-up sequence is for V_{DD_IO} to be applied first, followed by the V_{DD_CORE} supply. V_{DD_CORE} should not lead V_{DD_IO} supply by more than 0.3 V. Both supplies may be powered-down simultaneously.

11.3 Initialization

Upon power up, the ZL50070 should be initialized as follows:

- Assert PWR to low immediately after power is applied
- Set the TRST pin low to disable the JTAG TAP controller
- Deassert the PWR pin.
- Apply the Master Clock Input (CKi0) and Master Frame Pulse Input (FPi0) to the values defined by the CK_SEL1 - 0 pins
- Set the ODE pin low to disable the output streams

Note: After the $\overline{PWR}$ reset is removed, and on the application of a suitable master clock input, it takes approximately 1 ms for the internal initialization to complete

- Automatic block initialization of the Connection Memory to all zeros occurs, without microprocessor intervention
- All Group Control Registers are preset to 000C000C hex, corresponding to rates of 65 Mbps, no link inversions, no fractional output bit advancements, internal clock source, and no input sample point delays
- The Input Clock Control Register is preset to 0DB hex, corresponding to:
  - All clock inputs set to negative logic sense
  - All frame pulse inputs set to negative logic sense
  - All input frame pulses set to ST-BUS timing
- The Output Clock Control Register is pre-set to 060D1C3C hex, corresponding to:
  - All clock outputs set to negative logic sense
  - All frame pulse outputs set to negative logic sense
  - All output frame pulses set to ST-BUS timing
  - All output clock source selections to internal
  - Clock outputs, $\overline{CKo}$0 - 3 are preset to rates of 65 MHz, 32 MHz, 16 MHz and 8 MHz, respectively

Note: If the master clock input, $\overline{CKi}$0, is not available, the microprocessor port will assert $\overline{BERR}$ on all accesses and read cycles.

12.0 IEEE 1149.1 Test Access Port

The JTAG test port is implemented to meet the mandatory requirements of the IEEE 1149.1 (JTAG) standard. The operation of the boundary-scan circuity is controlled by an external Test Access Port (TAP) Controller.

The ZL50070 uses the public instructions defined in IEEE 1149.1, with the provision of a 16-bit Instruction Register, and three scannable Test Data Registers: Boundary Scan Register, Bypass Register and Device Identification Register.

12.1 Test Access Port (TAP)

The Test Access Port (TAP) accesses the ZL50070 test functions. The interface consists of 4 input and 1 output signal. as follows:

- **Test Clock (TCK)** - TCK provides the clock for the test logic. The TCK does not interfere with any on-chip clock and thus remains independent in the functional mode. The TCK permits shifting of test data into or out of the Boundary-Scan register cells concurrently with the operation of the device and without interfering with the on-chip logic.
- **Test Mode Select (TMS)** - The TAP Controller uses the logic signals received at the TMS input to control test operations. The TMS signals are sampled at the rising edge of the TCK pulse. This pin is internally pulled to V_{DD_IO} when it is not driven from an external source.
- **Test Data Input (TDi)** - Serial input data applied to this port is fed either into the instruction register or into a test data register, depending on the sequence previously applied to the TMS input. Both registers are described in a subsequent section. The received input data is sampled at the rising edge of TCK pulses. This pin is internally pulled to V_{DD_IO} when it is not driven from an external source.
- **Test Data Output (TDo)** - Depending on the sequence previously applied to the TMS input, the contents of either the instruction register or data register are serially shifted out towards the TDo. The data out of the TDo is clocked on the falling edge of the TCK pulses. When no data is shifted through the boundary scan cells, the TDo driver is set to a high impedance state.

- **Test Reset ($\overline{\text{TRST}}$)** - Resets the JTAG scan structure. This pin is internally pulled to V_{DD_IO} when it is not driven from an external source. When JTAG is not in use, this pin must be tied low for normal operation.

The TAP signals are only applied when the ZL50070 is required to be in test mode. When in normal, non-test mode, $\overline{\text{TRST}}$ must be connected low to disable the test logic. The remaining test pins may be left unconnected.

12.2 Instruction Register

The ZL50070 uses the public instructions defined in the IEEE 1149.1 standard. The JTAG interface contains a 16-bit instruction register. Instructions are serially loaded into the instruction register from the TDi when the TAP controller is in its shifted-OR state. These instructions are subsequently decoded to achieve two basic functions: to select the test data register that may operate while the instruction is current and to define the serial test data register path that is used to shift data between TDi and TDo during register scanning.

12.3 Test Data Register

As specified in the IEEE 1149.1 standard, the ZL50070 JTAG Interface contains three test data registers:

- **The Boundary-Scan Register** - The Boundary-Scan register consists of a series of Boundary-Scan cells arranged to form a scan path around the boundary of the ZL50070 core logic.
- **The Bypass Register** - The Bypass register is a single stage shift register that provides a one-bit path from TDi to TDo.
- T**he Device Identification Register** - The JTAG device ID for the ZL50070 is $C39614B_H$

Version	<31:28>	0000
Part Number	<27:12>	1100 0011 1001 0110
Manufacturer ID	<11:1>	0001 0100 101
LSB	<0>	1

12.4 Boundary Scan Description Language (BSDL)

A Boundary Scan Description Language (BSDL) file is available from Zarlink Semiconductor to aid in the use of the IEEE-1149.1 test interface.

13.0 Memory Map of ZL50070

The memory map for the ZL50070 is given in Table 12.

Address (Hex)	Description
00000 - 17FFF	Connection Memory
18000 - 1FFFF	Invalid Address. Access causes Bus error ($\overline{\text{BERR}}$)
20000 - 25FFF	Connection Memory LSB
26000 - 27FFF	Invalid Address. Access causes Bus error ($\overline{\text{BERR}}$)
28000 - 2DFFF	Data Memory: Read only; Bus error on write ($\overline{\text{BERR}}$)
2E000 - 2FFFF	Invalid Address. Access causes Bus error ($\overline{\text{BERR}}$)
30000 - 35FFF	Input BER Enable Control Memory.

Table 12 - Memory Map

Address (Hex)	Description
36000 - 3FFFF	Invalid Address. Access causes Bus error ($\overline{BERR}$)
40000 - 4017F	BER Counters
40180 - 401FF	Invalid Address. Access causes Bus error ($\overline{BERR}$)
40200 - 4025F	Group Control Registers
40260 - 4027F	Invalid Address. Access causes Bus error ($\overline{BERR}$)
40280 - 40283	Input Clock Control Register
40284 - 40287	Output Clock Control Register
40288 - 4028B	Block Init Register
4028C - 4028F	Block Init Enable
40290- 7FFFF	Invalid Address. Access causes Bus error ($\overline{BERR}$)

Table 12 - Memory Map (continued)

14.0 Detailed Memory and Register Descriptions

This section describes all the memories and registers that are used in this device.

14.1 Connection Memory

Address range 000000 - 017FFF hex.

On power-up, all Connection Memory locations are initialized automatically to 00000000 hex, using the Block Initialization feature, as described in Section 14.7 and Section 14.8.

The 32 bit Connection Memory has 24,576 locations. Each 32 bit long-word is used to program the desired source data and any other per-channel characteristics of one output time-slot.

The memory map for the Connection Memory is sub-divided into 24 blocks, each corresponding to one of the possible 24 output stream group numbers. The address ranges for these blocks are illustrated in Table 13.

Output Group	Start Address (Hex)	Address Range (Hex)	Output Group	Start Address (Hex)	Address Range (Hex)
0	000000	000000 - 000FFF	12	00C000	00C000 - 00CFFF
1	001000	001000 - 001FFF	13	00D000	00D000 - 00DFFF
2	002000	002000 - 002FFF	14	00E000	00E000 - 00EFFF
3	003000	003000 - 003FFF	15	00F000	00F000 - 00FFFF
4	004000	004000 - 004FFF	16	010000	010000 - 010FFF
5	005000	005000 - 005FFF	17	011000	011000 - 011FFF
6	006000	006000 - 006FFF	18	012000	012000 - 012FFF
7	007000	007000 - 007FFF	19	013000	013000 - 013FFF
8	008000	008000 - 008FFF	20	014000	014000 - 014FFF
9	009000	009000 - 009FFF	21	015000	015000 - 015FFF

Table 13 - Connection Memory Group Address Mapping

Output Group	Start Address (Hex)	Address Range (Hex)	Output Group	Start Address (Hex)	Address Range (Hex)
10	00A000	00A000 - 00AFFF	22	016000	016000 - 016FFF
11	00B000	00B000 - 00BFFF	23	017000	017000 - 017FFF

Table 13 - Connection Memory Group Address Mapping (continued)

The mapping of each output stream, SToA*n*, SToB*n*, SToC*n* and SToD*n*, depends on the programmed bit rate. The address offset range for each stream is illustrated in Table 14.

Output Group Data Rate	Timeslot Range	Output Stream	Stream Address Offset Range (Hex)
65 Mbps	0 - 1023	SToA*n*	00000 - 00FFF
		SToB*n*, C*n*, D*n*	N/A
32 Mbps	0 - 511	SToA*n*	00000 - 007FF
		SToB*n*	00800 - 00FFF
		SToC*n*, D*n*	N/A
16 Mbps	0 - 255	SToA*n*	00000 - 003FF
		SToB*n*	00400 - 007FF
		SToC*n*	00800 - 00BFF
		SToD*n*	00C00 - 00FFF
8 Mbps	0 - 127	SToA*n*	00000 - 001FF
		SToB*n*	00200 - 003FF
		SToC*n*	00400 - 005FF
		SToD*n*	00600 - 007FF
	N/A	$\overline{\text{BERR}}$	00800 - 00FFF

Table 14 - Connection Memory Stream Address Offset at Various Output Rates

The address range for a particular stream is given by adding the group start address, as indicated in Table 13, to the appropriate stream offset range, as indicated in Table 14. For example, the Connection Memory address range for SToB12 operating at 32 Mbps is 00C800-00CFFF; the Connection Memory address range for SToC4 operating at 8 Mbps is 004400-0045FF.

Each output channel timeslot occupies a range of 4 addresses in the Connection Memories. The timeslot address offset is illustrated in Table 15. It shows the maximum number of timeslots that a stream can have, but the actual number of timeslots available depends on the output data rates, as illustrated in Table 1 and Table 14.

Timeslot				Address Offset hex
SToA*n*	**SToB*n***	**SToC*n***	**SToD*n***	
0	0	0	0	000
1	1	1	1	004
2	2	2	2	008
-	-	-	-	-
126	126	126	126	1F8
127	127	127	127	1FC

Table 15 - Connection Memory Timeslot Address Offset Range

Timeslot				Address Offset hex
SToA*n*	**SToB*n***	**SToC*n***	**SToD*n***	
128	128	128	128	200
129	129	129	129	204
-	-	-	-	-
254	254	254	254	3F8
255	255	255	255	3FC
256	256			400
257	257			404
-	-	-	-	-
510	510			7F8
511	511			7FC
512				800
513				804
-				-
1021				FF4
1022				FF8
1023				FFC

Table 15 - Connection Memory Timeslot Address Offset Range (continued)

14.1.1 Connection Memory Bit Functions

The bit functions of the connection memory are illustrated in Table 16.

External Read/Write Address: 000000_H-$017FFF_H$
Reset Value: 0000_H

31	30	29	28	27	26	25	24	23	22	21	20	19	18	17	16
PCF 2	PCF 1	PCF 0	$\overline{V}$/D	ICL 1	ICL 0	OCL 1	OCL 0	0	0	0	0	0	0	0	0

15	14	13	12	11	10	9	8	7	6	5	4	3	2	1	0
0	GP 4	GP 3	GP 2	GP 1	GP 0	STCH 9	STCH 8	STCH 7	STCH 6	STCH 5	STCH 4	STCH 3	STCH 2	STCH 1	STCH 0

Bit	Name	Description
31 - 29	PCF2 - 0	**Per Channel Function.**

PCF2 - 0	Function	Description
000	OT	Output is tri-stated
001	FH	Output drives high always
010	MSG	Output is in message mode
011	VAR	Variable delay connection mode
100	CD	Constant delay connection mode
101	PRBS	PRBS Generator
110	OT	Output is tri-stated
111	OT	Output is tri-stated

Bit	Name	Description
28	$\overline{V}$/D	**Voice/Data Control** When this bit is low, the corresponding channel is for voice. When this bit is high, the corresponding channel is for data.
27 - 26	ICL1 - 0	**Input Coding Law**

ICL1 - 0	Input Coding Law	
	For Voice ($\overline{V}$/D bit = 0)	For Data ($\overline{V}$/D bit = 1)
00	CCITT.ITU A-Law	No Code
01	CCITT.ITU μ-Law	ABI
10	A-Law w/o ABI	Inverted ABI
11	μ-Law w/o Mag. Inv	All Bits Inverted

Table 16 - Connection Memory Bits (CMB)

External Read/Write Address: 000000_H-$017FFF_H$
Reset Value: 0000_H

31	30	29	28	27	26	25	24	23	22	21	20	19	18	17	16
PCF 2	PCF 1	PCF 0	$\overline{V}$/D	ICL 1	ICL 0	OCL 1	OCL 0	0	0	0	0	0	0	0	0
15	**14**	**13**	**12**	**11**	**10**	**9**	**8**	**7**	**6**	**5**	**4**	**3**	**2**	**1**	**0**
0	GP 4	GP 3	GP 2	GP 1	GP 0	STCH 9	STCH 8	STCH 7	STCH 6	STCH 5	STCH 4	STCH 3	STCH 2	STCH 1	STCH 0

Bit	Name	Description
25 - 24	OCL1 - 0	**Output Coding Law** OCL1 - 0 | Output Coding Law: For Voice ($\overline{V}$/D bit = 0) | For Data ($\overline{V}$/D bit = 1) 00 | CCITT.ITU A-Law | No Code 01 | CCITT.ITU μ-Law | ABI 10 | A-Law w/o ABI | Inverted ABI 11 | μ-Law w/o Mag. Inv | All Bits Inverted
23 - 15	Unused	**Reserved.** In normal functional mode, these bits **MUST** be set to zero.
14 - 10	GP4 - 0	**Source Group Selection.** These bits define the input/source group number (23 - 0).
9 - 0	STCH 9 - 0	**Source Stream and Channel Selection / Message Mode Data** In connection mode (constant/variable delay), these bits define the input/source stream and channel number, depending on the data rate. For 65.536 Mbps, bits 9 - 0 select the input channel (0 - 1023). For 32.768 Mbps, bits 9 - 1 select the input channel (0 - 511). Bit 0 selects stream STiA (0) or STiB (1) For 16.869 Mbps, bits 9 - 2 select the input channel (0 - 255). Bits 1 - 0 select stream STiA (00), STiB (01), STiC (10), or STiD (11) For 8.192 Mbps, bits 9 - 3 select the input channel (0 - 127). Bit 2 MUST be set to 0. Bits 1 - 0 select stream STiA (00), STiB (01), STiC (10), or STiD (11). In message mode, bits 7 - 0 define the output data. The data is output sequentially with bit 7 being output first. Bits 9 - 8 are not used.

Table 16 - Connection Memory Bits (CMB) (continued)

14.1.2 Connection Memory LSB

The Connection Memory Least Significant Byte field is provided to give a convenient alternative way to modify the output data for a stream in message mode. In this memory address range, all of the connection memory least significant bytes (bits 7 - 0) are available for read/write in consecutive address locations. This feature is provided for programming convenience. It can allow higher programming bandwidth on message mode streams. For example, one longword access to this memory space can read or set the message bytes in four consecutive connection memory locations. Access to this memory space is big-endian, with the most significant bytes on the data bus accessing the lower address of the connection memory. For example, for 32-bit data bus, to access the Connection Memory LSB associated with channels 3 - 0 on a particular stream, the data bus D31 - 24 carry data for channel 0, D23 - 16 carry data for channel 1, D15 - 8 carry data for channel 2, and D7 - 0 carry data for channel 3. Addressing into each of the streams is illustrated in Table 17.

Output Group	Start Address (Hex)	Address Range (Hex)	Output Group	Start Address (Hex)	Address Range (Hex)
0	020000	020000 - 0203FF	12	023000	023000 - 0233FF
1	020400	020400 - 0207FF	13	023400	023400 - 0237FF
2	020800	020800 - 020BFF	14	023800	023800 - 023BFF
3	020C00	020C00 - 020FFF	15	023C00	023C00 - 023FFF
4	021000	021000 - 0213FF	16	024000	024000 - 0243FF
5	021400	021400 - 0217FF	17	024400	024400 - 0247FF
6	021800	021800 - 021BFF	18	024800	024800 - 024BFF
7	021C00	021C00 - 021FFF	19	024C00	024C00 - 024FFF
8	022000	022000 - 0223FF	20	025000	025000 - 0253FF
9	022400	022400 - 0227FF	21	025400	025400 - 0257FF
10	022800	022800 - 022BFF	22	025800	025800 - 025BFF
11	022C00	022C00 - 022FFF	23	025C00	025C00 - 025FFF

Table 17 - Connection Memory LSB Group Address Mapping

Output Group Data Rate	Timeslot Range	Output Stream	Stream Address Offset Range (Hex)
65 Mbps	0 - 1023	STo*A*n	00000 - 003FF
		STo*B*n, C*n*, D*n*	N/A
32 Mbps	0 - 511	STo*A*n	00000 - 001FF
		STo*B*n	00200 - 003FF
		STo*C*n, D*n*	N/A
16 Mbps	0 - 255	STo*A*n	00000 - 000FF
		STo*B*n	00100 - 001FF
		STo*C*n	00200 - 002FF
		STo*D*n	00300 - 003FF
8 Mbps	0 - 127	STo*A*n	00000 - 0007F
		STo*B*n	00080 - 000FF
		STo*C*n	00100 - 0017F
		STo*D*n	00180 - 001FF
	N/A	BERR	00200 - 003FF

Table 18 - Connection Memory LSB Stream Address Offset at Various Output Rates

Within each stream group, the mapping of each of the actual output streams, SToA*n*, SToB*n*, SToC*n* and SToD*n*, depends on the output rate programmed into the Group Control Registers. The address offsets to these control areas for each of the output streams are illustrated in Table 18.

14.2 Data Memory

The data memory field is a read only address range used to monitor the data being received by the input streams. Addressing into each of the streams is illustrated in Table 19.

Input Group	Start Address (Hex)	Address Range (Hex)	Input Group	Start Address (Hex)	Address Range (Hex)
0	028000	028000 - 0283FF	12	02B000	02B000 - 02B3FF
1	028400	028400 - 0287FF	13	02B400	02B400 - 02B7FF
2	028800	028800 - 028BFF	14	02B800	02B800 - 02BBFF
3	028C00	028C00 - 028FFF	15	02BC00	02BC00 - 02BFFF
4	029000	029000 - 0293FF	16	02C000	02C000 - 02C3FF
5	029400	029400 - 0297FF	17	02C400	02C400 - 02C7FF
6	029800	029800 - 029BFF	18	02C800	02C800 - 02CBFF
7	029C00	029C00 - 029FFF	19	02CC00	02CC00 - 02CFFF
8	02A000	02A000 - 02A3FF	20	02D000	02D000 - 02D3FF
9	02A400	02A400 - 02A7FF	21	02D400	02D400 - 02D7FF
10	02A800	02A800 - 02ABFF	22	02D800	02D800 - 02DBFF
11	02AC00	02AC00 - 02AFFF	23	02DC00	02DC00 - 02DFFF

Table 19 - Data Memory Group Address Mapping

Within each stream group, the mapping of each of the actual input streams, STiA*n*, STiB*n*, STiC*n* and STiD*n*, depends on the input rate programmed into the Group Control Registers. The address offsets to these data areas for each of the input streams are illustrated in Table 20.

Input Group Data Rate	Time-slot Range	Input Streams	Address Offset Range (Hex)
65 Mbps	0 - 1023	STiA*n*	00000 - 003FF
		SToB*n*, C*n*, D*n*	N/A
32 Mbps	0 - 511	STiAn	00000 - 001FF
		STiBn	00200 - 003FF
		SToC*n*, D*n*	N/A
16 Mbps	0 - 255	STiAn	00000 - 000FF
		STiBn	00100 - 001FF
		STiCn	00200 - 002FF
		STiDn	00300 - 003FF
8 Mbps	0 - 127	STiAn	00000 - 0007F
		STiBn	00080 - 000FF
		STiCn	00100 - 0017F
		STiDn	00180 - 001FF
	N/A	$\overline{\text{BERR}}$	00200 - 003FF

Table 20 - Data Memory Stream Address Offset at Various Output Rates

The address ranges for the data memory portion corresponding to each of the actual input streams, STiA*n*, STiB*n*, STiC*n* and STiD*n*, for any particular input group number is calculated by adding the Start Address for the particular group, as indicated in Table 19, to the appropriate Address Offset Range, as indicated in Table 20. The time-slots

map linearly into the appropriate address offset range. (i.e., timeslots 0, 1, 2, ... map into addresses 00000, 00001, 00002, ...)

The entire data memory is a read only structure. Any write attempts will result in a bus error. **$\overline{\text{BERR}}$** is driven active low to terminate the bus cycle.

14.3 BER Control Memory and Error Counters

14.3.1 Input BER Enable Control Memory

The BER Enable Control Memory (IBERECM) is a read/write memory block. Each memory location is used to control the BER counter of one incoming timeslot. Addressing into each of the streams is illustrated in Table 21.

Input Group	Start Address (Hex)	Address Range (Hex)	Input Group	Start Address (Hex)	Address Range (Hex)
0	030000	030000 - 0303FF	12	033000	033000 - 0333FF
1	030400	030400 - 0307FF	13	033400	033400 - 0337FF
2	030800	030800 - 030BFF	14	033800	033800 - 033BFF
3	030C00	030C00 - 030FFF	15	033C00	033C00 - 033FFF
4	031000	031000 - 0313FF	16	034000	034000 - 0343FF
5	031400	031400 - 0317FF	17	034400	034400 - 0347FF
6	031800	031800 - 031BFF	18	034800	034800 - 034BFF
7	031C00	031C00 - 031FFF	19	034C00	034C00 - 034FFF
8	032000	032000 - 0323FF	20	035000	035000 - 0353FF
9	032400	032400 - 0327FF	21	035400	035400 - 0357FF
10	032800	032800 - 032BFF	22	035800	035800 - 035BFF
11	032C00	032C00 - 032FFF	23	035C00	035C00 - 035FFF

Table 21 - BER Enable Control Memory Group Address Mapping

Each byte location of the BER Enable Memory contains one read/write BER counter enable (BCE) bit, mapped into the D0 location. If the BCE bit is set, then the BER counter for the corresponding stream and timeslot is enabled for the duration of that timeslot. If the BCE bit is cleared the counter is disabled.

Input Group Data Rate	Time-slot Range	Input Streams	Address Offset Range (Hex)
65 Mbps	0 - 1023	STiA*n*	00000 - 003FF
		STiB*n*, C*n*, D*n*	N/A
32 Mbps	0 - 511	STiA*n*	00000 - 001FF
		STiB*n*	00200 - 003FF
		STiC*n*, D*n*	N/A
16 Mbps	0 - 255	STiAn	00000 - 000FF
		STiBn	00100 - 001FF
		STiCn	00200 - 002FF
		STiDn	00300 - 003FF

Table 22 - BER Enable Control Memory Stream Address Offset at Various Output Rates

Input Group Data Rate	Time-slot Range	Input Streams	Address Offset Range (Hex)
8 Mbps	0 - 127	STiAn	00000 - 0007F
		STiBn	00080 - 000FF
		STiCn	00100 - 0017F
		STiDn	00180 - 001FF

Table 22 - BER Enable Control Memory Stream Address Offset at Various Output Rates (continued)

14.3.2 BER Counters

There are a total of 96 Bit Error Counters, corresponding to the 96 serial input streams. Each count value is 32 bits wide, but only the least significant 16 bits are used. The most significant 16 bits of the bit error counters will always read back zero. A write operation to any byte of the counter, including the 16 most significant bits, will clear that counter.

Each bit error counter contains the number of single bit errors detected on the corresponding stream, since the counter was last cleared. If the number of bit errors detected exceeds 65,535 (decimal), the counter will hold that value until it is cleared.

BER Input Group	BER Input Stream	Start Address (Hex)	End Address (Hex)
0	STiA0	40000	40003
	STiB0	40080	40083
	STiC0	40100	40103
	STiD0	40180	40183
1	STiA1	40004	40007
	STiB1	40084	40087
	STiC1	40104	40107
	STiD1	40184	40187
2	STiA2	40008	4000B
	STiB2	40088	4008B
	STiC2	40108	4010B
	STiD2	40188	4018B
. . .	. . .	. . .	. . .
23	STiA23	4005C	4005F
	STiB23	400DC	400DF
	STiC23	4015C	4015F
	STiD23	401DC	401DF

Table 23 - BER Counter Group and Stream Address Mapping

14.4 Group Control Registers

The ZL50070 addresses the issues of a simple programming model and automatic stream configuration by defining a basic switching bit rate of 65.536 Mbps and by grouping the I/O streams. Each TDM I/O group contains 4 input and 4 output streams. The 4 input streams in the same group have identical input characteristics, and similarly, the 4 output streams in the same group have identical output characteristics. However, input and output streams in the same group can have different input and output operation characteristics.

The Group Control Registers are provided for setting the operating characteristics of the TDM input and output streams. All of the Group Control Registers are mapped long-word aligned on 32 bit boundaries in the memory space. Each of the 24 registers is used to control one group. The mapping of the Group Control Registers to the I/O group numbers is illustrated in Table 24. The bit functions of each of the Group Control Registers are illustrated in Table 25.

TDM Group	Group Control Register Address (Hex)
0	40200-40203
1	40204-40207
2	40208-4020B
3	4020C-4020F
: :	: :
21	40254-40257
22	40258-4025B
23	4025C-4025F

Table 24 - Group Control Register Addressing

External Read/Write Address: 40200_H - $4025F_H$
Reset Value: $000C000C_H$

31	30	29	28	27	26	25	24	23	22	21	20	19	18	17	16
0	0	0	0	0	0	0	0	0	OSI	OSBA 1	OSBA 0	OSBR 1	OSBR 0	OSSRC 1	OSSRC 0
15	14	13	12	11	10	9	8	7	6	5	4	3	2	1	0
0	0	0	0	0	0	ISI	ISPD 4	ISPD 3	ISPD2	ISPD 1	ISPD 0	ISBR 1	ISBR 0	ISSRC 1	ISSRC 0

Bit	Name	Description
31 - 23	Unused	**Reserved.** In normal functional mode, these bits **MUST** be set to zero.
22	OSI	**Output Stream Invert** For normal operation, this bit is set low. To invert the output stream, set this bit high.

Table 25 - Group Control Register

External Read/Write Address: 40200_H - $4025F_H$
Reset Value: $000C000C_H$

31	30	29	28	27	26	25	24	23	22	21	20	19	18	17	16
0	0	0	0	0	0	0	0	0	OSI	OSBA 1	OSBA 0	OSBR 1	OSBR 0	OSSRC 1	OSSRC 0
15	14	13	12	11	10	9	8	7	6	5	4	3	2	1	0
0	0	0	0	0	0	ISI	ISPD 4	ISPD 3	ISPD2	ISPD 1	ISPD 0	ISBR 1	ISBR 0	ISSRC 1	ISSRC 0

Bit	Name	Description
21 - 20	OSBA1 - 0	**Output Stream Bit Advancement** OSBA1 - 0 / Non-65 Mbps / 65 Mbps 00 / 0 ns / 0 ns 01 / 7.6 ns / 3.8 ns 10 / 15.2 ns / 7.6 ns 11 / 22.8 ns / 11.4 ns
19 - 18	OSBR1 - 0	**Output Stream Bit Rate** OSBR1 - 0 / Bit Rates Per Group: STi/oA / STi/oB / STi/oC / STi/oD 00 / 8.192 Mbps / 8.192 Mbps / 8.192 Mbps / 8.192 Mbps 01 / 16.384 Mbps / 16.384 Mbps / 16.384 Mbps / 16.384 Mbps 10 / 32.768 Mbps / 32.768 Mbps / Not Used / Not Used 11 / 65.536 Mbps / Not Used / Not Used / Not Used Unused streams are tri-stated. If the internal system clock is used as the clock source, all the above data rates are available. Otherwise, the data rate cannot exceed the selected clock source's rate.
17 - 16	OSSRC1 - 0	**Output Stream Clock Source Select** OSSRC1 - 0 / Output Timing Source 00 / Internal System Clock 01 / $\overline{CKi}$0 and $\overline{FPi}$0 10 / $\overline{CKi}$1 and $\overline{FPi}$1 11 / $\overline{CKi}$2 and $\overline{FPi}$2
15 - 10	Unused	**Reserved.** In normal functional mode, these bits **MUST** be set to zero.
9	ISI	**Input Stream Inversion** For normal operation, this bit is set low. To invert the input stream, set this bit high.

Table 25 - Group Control Register (continued)

External Read/Write Address: 40200_H - $4025F_H$
Reset Value: $000C000C_H$

31	30	29	28	27	26	25	24	23	22	21	20	19	18	17	16
0	0	0	0	0	0	0	0	0	OSI	OSBA 1	OSBA 0	OSBR 1	OSBR 0	OSSRC 1	OSSRC 0
15	14	13	12	11	10	9	8	7	6	5	4	3	2	1	0
0	0	0	0	0	0	ISI	ISPD 4	ISPD 3	ISPD2	ISPD 1	ISPD 0	ISBR 1	ISBR 0	ISSRC 1	ISSRC 0

Bit	Name	Description
8 - 4	ISPD4 - 0	**Input Sampling Point Delay** Default Sampling Point is 3/4. Adjust according to Figure on page 20.
3 - 2	ISBR1 - 0	**Input Stream Bit Rate** ISBR1 - 0 / Bit Rates Per Group: STi/oA, STi/oB, STi/oC, STi/oD 00: 8.192 Mbps, 8.192 Mbps, 8.192 Mbps, 8.192 Mbps 01: 16.384 Mbps, 16.384 Mbps, 16.384 Mbps, 16.384 Mbps 10: 32.768 Mbps, 32.768 Mbps, Not Used, Not Used 11: 65.536 Mbps, Not Used, Not Used, Not Used Unused streams must be connected to ground. If the internal system clock is used as the clock source, all the above data rates are available. Otherwise, the data rate cannot exceed the selected clock source's rate.
1 - 0	ISSRC1 - 0	**Input Stream Clock Source Select** ISSRC1 - 0 / Input Timing Source 00: Internal System Clock 01: $\overline{CKi}0$ and $\overline{FPi}0$ 10: $\overline{CKi}1$ and $\overline{FPi}1$ 11: $\overline{CKi}2$ and $\overline{FPi}2$

Table 25 - Group Control Register (continued)

The Group Control Register is a static control register. Changes to bit settings may disrupt data flow on the selected port for a maximum of 2 frames.

14.5 Input Clock Control Register

The Input Clock Control Register is used to select the logic sense of the input clock.

External Read/Write Address: 40280_H-40283_H
Reset Value: $0DB_H$

31	30	29	28	27	26	25	24	23	22	21	20	19	18	17	16
0	0	0	0	0	0	0	0	0	0	0	0	0	0	0	0

15	14	13	12	11	10	9	8	7	6	5	4	3	2	1	0
0	0	0	0	0	0	0	GCI SEL2	FPI POL2	CKI POL2	GCI SEL1	FPI POL1	CKI POL1	GCI SEL0	FPI POL0	CKI POL0

Bit	Name	Description
31 - 9	Unused	**Reserved.** In normal functional mode, these bits **MUST** be set to zero.
8	GCISEL2	**GCI-Bus Selection for $\overline{\text{FPi2}}$** When this bit is low, $\overline{\text{FPi2}}$ is set for ST-BUS mode. When this bit is high, $\overline{\text{FPi2}}$ is set for GCI-Bus mode.
7	FPIPOL2	**Frame Pulse Polarity Selection for $\overline{\text{FPi2}}$** When this bit is low, $\overline{\text{FPi2}}$ is set for active high. When this bit is high, $\overline{\text{FPi2}}$ is set for active low.
6	CKIPOL2	**Clock Polarity Selection for $\overline{\text{CKi2}}$** When this bit is low, $\overline{\text{CKi2}}$ is set for the positive clock edge. When this bit is high, $\overline{\text{CKi2}}$ is set for the negative clock edge.
5	GCISEL1	**GCI-Bus Selection for $\overline{\text{FPi1}}$** When this bit is low, $\overline{\text{FPi1}}$ is set for ST-BUS mode. When this bit is high, $\overline{\text{FPi1}}$ is set for GCI-Bus mode.
4	FPIPOL1	**Frame Pulse Polarity Selection for $\overline{\text{FPi1}}$** When this bit is low, $\overline{\text{FPi1}}$ is set for active high. When this bit is high, $\overline{\text{FPi1}}$ is set for active low.
3	CKIPOL1	**Clock Polarity Selection for $\overline{\text{CKi1}}$** When this bit is low, $\overline{\text{CKi1}}$ is set for the positive clock edge. When this bit is high, $\overline{\text{CKi1}}$ is set for the negative clock edge.
2	GCISEL0	**GCI-Bus Selection $\overline{\text{FPi0}}$** When this bit is low, $\overline{\text{FPi0}}$ is set for ST-BUS mode. When this bit is high, $\overline{\text{FPi0}}$ is set for GCI-Bus mode.
1	FPIPOL0	**Frame Pulse Polarity Selection $\overline{\text{FPi0}}$** When this bit is low, $\overline{\text{FPi0}}$ is set for active high. When this bit is high, $\overline{\text{FPi0}}$ is set for active low.
0	CKIPOL0	**Clock Polarity Selection for $\overline{\text{CKi0}}$** When this bit is low, $\overline{\text{CKi0}}$ is set for the positive clock edge. When this bit is high, $\overline{\text{CKi0}}$ is set for the negative clock edge.

Table 26 - Input Clock Control Register

14.6 Output Clock Control Register

The Output Clock Control Register is used to select the desired source, frequency, and logic sense of the output clocks. The bit functions of the Output Clock Control Register are illustrated in Table 27.

External Read/Write Address: 40284_H-40287_H
Reset Value: $060D1C3C_H$

31	30	29	28	27	26	25	24	23	22	21	20	19	18	17	16
0	0	0	0	GCO SEL3	FPO POL3	CKO POL3	CKO3 RATE1	CKO3 RATE0	CKO3 SRC1	CKO3 SRC0	GCO SEL2	FPO POL2	CKO POL2	CKO2 RATE1	CKO2 RATE0

15	14	13	12	11	10	9	8	7	6	5	4	3	2	1	0
CKO2 SRC1	CKO2 SRC0	GCO SEL1	FPO POL1	CKO POL1	CKO1 RATE1	CKO1 RATE0	CKO1 SRC1	CKO1 SRC0	GCO SEL0	FPO POL0	CKO POL0	CKO0 RATE1	CKO0 RATE0	CKO0 SRC1	CKO0 SRC0

Bit	Name	Description
31 - 28	Unused	**Reserved.** In normal functional mode, these bits **MUST** be set to zero.
27	GCO SEL3	**GCI-Bus Selection for $\overline{FPo3}$** When this bit is low, $\overline{FPo3}$ is set for ST-BUS mode. When this bit is high, $\overline{FPo3}$ is set for GCI-Bus mode.
26	FPO POL3	**Frame Pulse Polarity Selection for $\overline{FPo3}$** When this bit is low, $\overline{FPo3}$ is set for active high. When this bit is high, $\overline{FPo3}$ is set for active low.
25	CKO POL3	**Clock Polarity Selection for $\overline{CKo3}$** When this bit is low, $\overline{CKo3}$ is set for the positive clock edge. When this bit is high, $\overline{CKo3}$ is set for the negative clock edge.
24 - 23	CKO3 RATE 1 - 0	**Output Clock Rate for $\overline{CKo3}$ and $\overline{FPo3}$** The output clock rate can not exceed the selected clock source rate. All rates are available when the internal system clock is selected as clock source.

CKO3RATE1 - 0	$\overline{CKo3}$	$\overline{FPo3}$
00	8.192 MHz	120 ns
01	16.384 MHz	60 ns
10	32.768 MHz	30 ns
11	65.536 MHz	15 ns

Bit	Name	Description
22 - 21	CKO3 SRC 1 - 0	**Output Clock Source for $\overline{CKo3}$ and $\overline{FPo3}$**

CKO3SRC1 - 0	Output Timing Source
00	Internal System Clock
01	$\overline{CKi0}$ and $\overline{FPi0}$
10	$\overline{CKi1}$ and $\overline{FPi1}$
11	$\overline{CKi2}$ and $\overline{FPi2}$

Table 27 - Output Clock Control Register

External Read/Write Address: 40284_H-40287_H
Reset Value: $060D1C3C_H$

31	30	29	28	27	26	25	24	23	22	21	20	19	18	17	16
0	0	0	0	GCO SEL3	FPO POL3	CKO POL3	CKO3 RATE1	CKO3 RATE0	CKO3 SRC1	CKO3 SRC0	GCO SEL2	FPO POL2	CKO POL2	CKO2 RATE1	CKO2 RATE0

15	14	13	12	11	10	9	8	7	6	5	4	3	2	1	0
CKO2 SRC1	CKO2 SRC0	GCO SEL1	FPO POL1	CKO POL1	CKO1 RATE1	CKO1 RATE0	CKO1 SRC1	CKO1 SRC0	GCO SEL0	FPO POL0	CKO POL0	CKO0 RATE1	CKO0 RATE0	CKO0 SRC1	CKO0 SRC0

Bit	Name	Description
20	GCO SEL2	**GCI-Bus Selection for $\overline{FPo2}$** When this bit is low, $\overline{FPo2}$ is set for ST-BUS mode. When this bit is high, $\overline{FPo2}$ is set for GCI-Bus mode.
19	FPO POL2	**Frame Pulse Polarity Selection for $\overline{FPo2}$** When this bit is low, $\overline{FPo2}$ is set for active high. When this bit is high, $\overline{FPo2}$ is set for active low.
18	CKO POL2	**Clock Polarity Selection for $\overline{CKo2}$** When this bit is low, $\overline{CKo2}$ is set for the positive clock edge. When this bit is high, $\overline{CKo2}$ is set for the negative clock edge.
17 - 16	CKO2 RATE 1 - 0	**Output Clock Rate for $\overline{CKo2}$ and $\overline{FPo2}$** The output clock rate can not exceed the selected clock source rate. All rates are available when the internal system clock is selected as clock source. CKO2RATE1 - 0 / $\overline{CKo2}$ / $\overline{FPo2}$ 00 / 8.192 MHz / 120 ns 01 / 16.384 MHz / 60 ns 10 / 32.768 MHz / 30 ns 11 / 65.536 MHz / 15 ns
15 - 14	CKO2 SRC 1 - 0	**Output Clock Source for $\overline{CKo2}$ and $\overline{FPo2}$** CKO2SRC1 - 0 / Output Timing Source 00 / Internal System Clock 01 / $\overline{CKi0}$ and $\overline{FPi0}$ 10 / $\overline{CKi1}$ and $\overline{FPi1}$ 11 / $\overline{CKi2}$ and $\overline{FPi2}$
13	GCO SEL1	**GCI-Bus Selection for $\overline{FPo1}$** When this bit is low, $\overline{FPo1}$ is set for ST-BUS mode. When this bit is high, $\overline{FPo1}$ is set for GCI-Bus mode.

Table 27 - Output Clock Control Register (continued)

External Read/Write Address: 40284_H-40287_H
Reset Value: $060D1C3C_H$

31	30	29	28	27	26	25	24	23	22	21	20	19	18	17	16
0	0	0	0	GCO SEL3	FPO POL3	CKO POL3	CKO3 RATE1	CKO3 RATE0	CKO3 SRC1	CKO3 SRC0	GCO SEL2	FPO POL2	CKO POL2	CKO2 RATE1	CKO2 RATE0

15	14	13	12	11	10	9	8	7	6	5	4	3	2	1	0
CKO2 SRC1	CKO2 SRC0	GCO SEL1	FPO POL1	CKO POL1	CKO1 RATE1	CKO1 RATE0	CKO1 SRC1	CKO1 SRC0	GCO SEL0	FPO POL0	CKO POL0	CKO0 RATE1	CKO0 RATE0	CKO0 SRC1	CKO0 SRC0

Bit	Name	Description
12	FPO POL1	**Frame Pulse Polarity Selection for $\overline{FPo1}$** When this bit is low, $\overline{FPo1}$ is set for active high. When this bit is high, $\overline{FPo1}$ is set for active low.
11	CKO POL1	**Clock Polarity Selection for $\overline{CKo1}$** When this bit is low, $\overline{CKo1}$ is set for the positive clock edge. When this bit is high, $\overline{CKo1}$ is set for the negative clock edge.
10 - 9	CKO1 RATE 1 - 0	**Output Clock Rate for $\overline{CKo1}$ and $\overline{FPo1}$** The output clock rate can not exceed the selected clock source rate. All rates are available when the internal system clock is selected as clock source**.**

CKO1RATE1 - 0	$\overline{CKo1}$	$\overline{FPo1}$
00	8.192 MHz	120 ns
01	16.384 MHz	60 ns
10	32.768 MHz	30 ns
11	65.536 MHz	15 ns

Bit	Name	Description
8 - 7	CKO1 SRC 1 - 0	**Output Clock Source for $\overline{CKo1}$ and $\overline{FPo1}$**

CKO1SRC1 - 0	Output Timing Source
00	Internal System Clock
01	$\overline{CKi0}$ and $\overline{FPi0}$
10	$\overline{CKi1}$ and $\overline{FPi1}$
11	$\overline{CKi2}$ and $\overline{FPi2}$

Bit	Name	Description
6	GCO SEL0	**GCI-Bus Selection for $\overline{FPo0}$** When this bit is low, $\overline{FPo0}$ is set for ST-BUS mode. When this bit is high, $\overline{FPo0}$ is set for GCI-Bus mode.
5	FPO POL0	**Frame Pulse Polarity Selection for $\overline{FPo0}$** When this bit is low, $\overline{FPo0}$ is set for active high. When this bit is high, $\overline{FPo0}$ is set for active low.

Table 27 - Output Clock Control Register (continued)

External Read/Write Address: 40284_H-40287_H
Reset Value: $060D1C3C_H$

31	30	29	28	27	26	25	24	23	22	21	20	19	18	17	16
0	0	0	0	GCO SEL3	FPO POL3	CKO POL3	CKO3 RATE1	CKO3 RATE0	CKO3 SRC1	CKO3 SRC0	GCO SEL2	FPO POL2	CKO POL2	CKO2 RATE1	CKO2 RATE0

15	14	13	12	11	10	9	8	7	6	5	4	3	2	1	0
CKO2 SRC1	CKO2 SRC0	GCO SEL1	FPO POL1	CKO POL1	CKO1 RATE1	CKO1 RATE0	CKO1 SRC1	CKO1 SRC0	GCO SEL0	FPO POL0	CKO POL0	CKO0 RATE1	CKO0 RATE0	CKO0 SRC1	CKO0 SRC0

Bit	Name	Description
4	CKO POL0	**Clock Polarity Selection for $\overline{CKo0}$** When this bit is low, $\overline{CKo0}$ is set for the positive clock edge. When this bit is high, $\overline{CKo0}$ is set for the negative clock edge.
3 - 2	CKO0 RATE 1 - 0	**Output Clock Rate for $\overline{CKo0}$ and $\overline{FPo0}$** The output clock rate can not exceed the selected clock source rate. All rates are available when the internal system clock is selected as clock source. CKO0RATE1 - 0 / $\overline{CKo0}$ / $\overline{FPo0}$ 00 / 8.192 MHz / 120 ns 01 / 16.384 MHz / 60 ns 10 / 32.768 MHz / 30 ns 11 / 65.536 MHz / 15 ns
1 - 0	CKO0 SRC 1 - 0	**Output Clock Source for $\overline{CKo0}$ and $\overline{FPo0}$** CKO0SRC1 - 0 / Output Timing Source 00 / Internal System Clock 01 / $\overline{CKi0}$ and $\overline{FPi0}$ 10 / $\overline{CKi1}$ and $\overline{FPi1}$ 11 / $\overline{CKi2}$ and $\overline{FPi2}$

Table 27 - Output Clock Control Register (continued)

14.7 Block Init Register

The Block Init Register is a 32 bit read/write register at address 040288 - $04028B_H$.

The Block Init Register is used during block initialization of the connection memory. A block initialization automatically occurs at power-up. However, it is possible to perform a block initialization at any time. During Block Initialization, the value of the Block Init Register is copied to all connection memory locations in an operation that runs in about 120 µs. If the Block Init Register is modified during a block initialization, the new value used is ignored.

14.8 Block Init Enable Register

The Block Init Enable Register is a 32 bit read/write register at address 04028C - 04028F$_H$.

The Block Init Enable Register is used to initiate a block initialization of the connection memory. A block initialization automatically occurs at power-up. Since the Block Init Register is cleared at power-up this automatic block initialization will write all zeros to all Connection Memory Bits. However, it is possible to perform a block initialization at any time. To begin a block initialization, the hex value 31415926 must be written to the Block Init Enable Register. If a block initialization is signaled while one is in progress, the signal is ignored, and the currently active block initialization is allowed to complete.

The value read back from the Block Init Enable Register is different from the value written. It represents both the block initialization status, and the power-up reset initialization status. The meaning of the initialization status bits is illustrated in Table 28. The bits 31 - 2 always read back 0.

Bit	Name	Description
0	Block Init Status	0 if Block initialization is completed; 1 if Block initialization is in progress.
1	Reset Init Status	0 if Reset initialization is completed; 1 if Reset initialization is in progress.

Table 28 - Block and Power-up Initialization Status Bits

Any access to the connection memory or the data memory during a block initialization or a reset initialization will result in a bus error, $\overline{\text{BERR}}$. All TDM outputs are tri-stated during any block initialization.

15.0 DC/AC Electrical Characteristics

Absolute Maximum Ratings[1] - Voltages are with respect to ground (V_{SS}) unless otherwise stated.

	Characteristics	Sym.	Min.	Typ.[2]	Max.	Unit
1	Chip I/O Supply Voltage	V_{DD_IO}	-0.5		5.0	V
2	Chip Core Supply Voltage	V_{DD_CORE}	-0.5		5.0	V
3	Input Voltage (non-5 V tolerant inputs)	V_{I_3V}	-0.5		V_{DD_IO} + 0.5	V
4	Input Voltage (5 V tolerant inputs)	V_{I_5V}	-0.5		7.0	V
5	Continuous Current at digital outputs	I_o			15	mA
6	Package power dissipation	P_D			2.1	W
7	Storage temperature	T_S	- 55		+125	°C

Note 1: Exceeding these values may cause permanent damage. Functional operation under these conditions is not implied.

Note 2: Typical figures are at 25°C, V_{DD_CORE} at 1.8 V and V_{DD_IO} at 3.3 V and are for design aid only: not guaranteed and not subject to production testing.

Recommended Operating Conditions - Voltages are with respect to ground (V_{SS}) unless otherwise stated.

	Characteristics	Sym.	Min.	Typ.[1]	Max.	Unit
1	Operating Temperature	T_{OP}	-40	25	+85	°C
2	Positive Supply Core	V_{DD_CORE}	1.71	1.8	1.89	V
3	Positive Supply I/O	V_{DD_IO}	3.0	3.3	3.6	V
4	Input Voltage (non-5 V tolerant inputs)	V_{I_3V}	0		V_{DD_IO}	V
5	Input Voltage (5 V tolerant inputs)	V_{I_5V}	0		5.5	

Note 1: Typical figures are at 25°C, V_{DD_CORE} at 1.8 V and V_{DD_IO} at 3.3 V and are for design aid only: not guaranteed and not subject to production testing.

DC Electrical Characteristics - Voltages are with respect to ground (VSS) unless otherwise stated.

	Characteristics	Sym.	Min.	Typ.[1]	Max.	Unit	Test Conditions
1	Core Supply Current[2]	I_{DD_CORE}			500	mA	
2	I/O Supply Current	I_{DD_IO}			62	mA	Outputs Unloaded
3	Leakage Current	I_{DDQ}		105		µA	
4	Dynamic Power Dissipation	P_{DD}			1.2	W	Outputs Unloaded
5	Input High Voltage	V_{IH}	2.0			V	
6	Input Low Voltage	V_{IL}			0.8	V	
7	Input Leakage-input pins[3]	I_{IL}			5	µA	$0 \leq < V_I \leq V_{DD_IO}$
8	Input Leakage-bidirectional pins	I_{BL}			5	µA	$0 \leq < V_I \leq V_{DD_IO}$
9	Pull-up Current	I_{PU}		-33		µA	Input at 0 V

DC Electrical Characteristics - Voltages are with respect to ground (VSS) unless otherwise stated.

	Characteristics	Sym.	Min.	Typ.[1]	Max.	Unit	Test Conditions
10	Pull-down Current	I_{PD}		33		µA	Input at V_{DD_IO}
11	Input Pin Capacitance	C_I		3		pF	
12	Output High Voltage	V_{OH}	2.4			V	I_{OH} = 8 mA
13	Output Low Voltage	V_{OL}			0.4	V	I_{OL} = 8 mA

Note 1: Typical figures are at 25°C, V_{DD_CORE} at 1.8 V and V_{DD_IO} at 3.3 V and are for design aid only: not guaranteed and not subject to production testing.

Note 2: StoA = 65 Mbps with random patterns. CKo0 = 65 MHz, CKo1 = 32 MHz.

Note 3: Maximum leakage on pins (output or I/O pins in high impedance state) is over an applied voltage (Vin).

AC Electrical Characteristics[1] - Timing Parameter Measurement Voltage Levels - Voltages are with respect to ground (V_{SS}) unless otherwise stated.

	Characteristics	Sym.	Level	Unit	Test Conditions
1	CMOS Threshold	V_{CT}	$0.5V_{DD_IO}$	V	
2	Rise/Fall Threshold Voltage High	V_{HM}	$0.7V_{DD_IO}$	V	
3	Rise/Fall Threshold Voltage Low	V_{LM}	$0.3V_{DD_IO}$	V	

1. Characteristics are over recommended operating conditions unless otherwise stated.

AC Electrical Characteristics[1] - $\overline{FPi}$0-2 and $\overline{CKi}$0-2 Timing

No.	Characteristic (Figure)	Sym.	Min.	Typ.[2]	Max.	Units	Notes
1	$\overline{FPi}$0-2 Input Frame Pulse Setup Time	t_{FPIS}	3		12	ns	$\overline{CKi}$ = 65.536 MHz
			3		25	ns	$\overline{CKi}$ = 32.768 MHz
			3		55	ns	$\overline{CKi}$ = 16.384 MHz
			3		115	ns	$\overline{CKi}$ = 8.192 MHz
2	$\overline{FPi}$0-2 Input Frame Pulse Hold Time	t_{FPIH}	2		12	ns	$\overline{CKi}$ = 65.536 MHz
			2		25	ns	$\overline{CKi}$ = 32.768 MHz
			2		55	ns	$\overline{CKi}$ = 16.384 MHz
			2		115	ns	$\overline{CKi}$ = 8.192 MHz
3	$\overline{FPi}$0-2 Input Frame Pulse width	t_{FPIW}	5		24	ns	$\overline{CKi}$ = 65.536 MHz
			5		50	ns	$\overline{CKi}$ = 32.768 MHz
			5		110	ns	$\overline{CKi}$ = 16.384 MHz
			5		230	ns	$\overline{CKi}$ = 8.192 MHz

AC Electrical Characteristics[1] - $\overline{FPi}$0-2 and $\overline{CKi}$0-2 Timing

No.	Characteristic (Figure)	Sym.	Min.	Typ.[2]	Max.	Units	Notes
4	$\overline{CKi}$0-2 Input Clock Period (average value, does not consider the effects of jitter)	t_{CKIP}	15	15.26	15.5	ns	65.536 MHz
			30	30.5	31	ns	32.768 MHz
			60	61.0	62	ns	16.384 MHz
			120	122	124	ns	8.192 MHz
5	$\overline{CKi}$ Input Clock High Time	t_{CKIH}	4			ns	
6	$\overline{CKi}$ Input Clock Low Time	t_{CKIL}	4			ns	
7	$\overline{CKi}$ Input Clock Rise/Fall Time	t_{rCKI}, t_{fCKI}	0		6	ns	
8	$\overline{CKi}$ Input Clock Cycle to Cycle Variation	t_{CVC}			2	ns p-p	Standard rating[3]. STi at 65 Mbps
					4	ns p-p	Standard rating[3]. STi at 32 Mbps
					10	ns p-p	Standard rating[3]. STi at 16 Mbps
					20	ns p-p	Standard rating[3]. STi at 8 Mbps
					20% of t_{CKIP}	p-p	Extended rating. With alternate clock source[4] or high $\overline{CKi0}$ rate[5]

Note 1: Characteristics are over recommended operating conditions unless otherwise stated.

Note 2: Typical figures are at 25°C, V_{DD_CORE} at 1.8 V and V_{DD_IO} at 3.3 V and are for design aid only: not guaranteed and not subject to production testing.

Note 3: When using internal APLL clock source and the $\overline{CKi0}$ frequency is less than or equal to the data rate.

Note 4: When using input clock source $\overline{CKi}$2-0 instead of the internal APLL clock source.

Note 5: When using internal APLL clock source and the $\overline{CKi0}$ frequency is higher than or equal to twice the data rate.

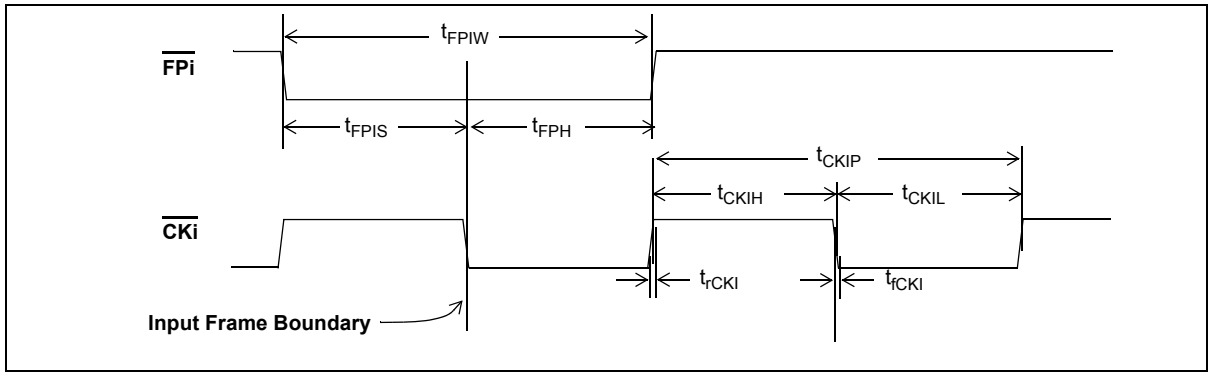

Figure 12 - Frame Pulse Input and Clock Input

AC Electrical Characteristics[1] - $\overline{FPi}$ and $\overline{CKi}$ Skew

No.	Characteristic (Figure 13)	Sym.	Min.	Typ.[2]	Max.	Units	Notes
1	$\overline{CKi0}$ to $\overline{CKi1}$, $\overline{2}$ Skew	t_{CKSK}	-30		+30	ns	C_L 50 pF Assume no jitter on input clocks

Note 1: Characteristics are over recommended operating conditions unless otherwise stated.

Note 2: Typical figures are at 25°C, V_{DD_CORE} at 1.8 V and V_{DD_IO} at 3.3 V and are for design aid only: not guaranteed and not subject to production testing.

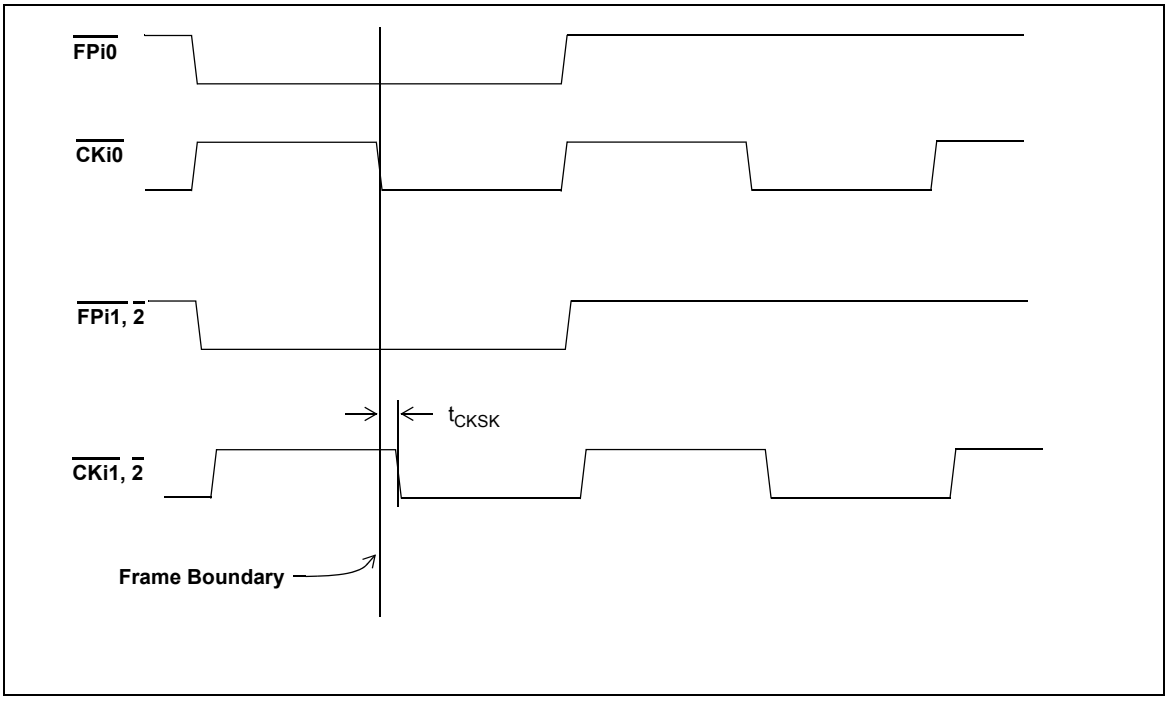

Figure 13 - Frame Skew Timing Diagram

AC Electrical Characteristics[1] - $\overline{FPO}$0-3 and $\overline{CKO}$0-3 (65.536 MHz) Timing

No.	Characteristic	Sym.	Min.	Typ.[2]	Max.	Units	Notes[3]
1	$\overline{FPO}$0-3 Output Frame Pulse Setup Time	t_{FPOS}	5.5		9.5	ns	C_L=30 pF
2	$\overline{FPO}$0-3 Output Frame Pulse Hold Time	t_{FPOH}	5.5		9.5	ns	C_L=30 pF
3	$\overline{CKO}$0-3 Output Clock Period	t_{CKOP}	14.5		15.5	ns	C_L=30 pF

AC Electrical Characteristics[1] - $\overline{FPO}$0-3 and $\overline{CKO}$0-3 (32.768 MHz) Timing

No.	Characteristic	Sym.	Min.	Typ.[2]	Max.	Units	Notes[3]
1	$\overline{FPO}$0-3 Output Frame Pulse Setup Time	t_{FPOS}	14.0		16.5	ns	C_L=30 pF
2	$\overline{FPO}$0-3 Output Frame Pulse Hold Time	t_{FPOH}	14.0		16.5	ns	C_L=30 pF
3	$\overline{CKO}$0-3 Output Clock Period	t_{CKOP}	30.0		31.0	ns	C_L=30 pF

AC Electrical Characteristics[1] - $\overline{FPO}_{0-3}$ and $\overline{CKO}_{0-3}$ (16.384 MHz) Timing

No.	Characteristic	Sym.	Min.	Typ.[2]	Max.	Units	Notes[3]
1	$\overline{FPO}$0-3 Output Frame Pulse Setup Time	t_{FPOS}	29.0		31.0	ns	C_L=30 pF
2	$\overline{FPO}$0-3 Output Frame Pulse Hold Time	t_{FPOH}	29.0		31.0	ns	C_L=30 pF
3	$\overline{CKO}$0-3 Output Clock Period	t_{CKOP}	60.5		61.5	ns	C_L=30 pF

AC Electrical Characteristics[1] - $\overline{FPO}_{0-3}$ and $\overline{CKO}_{0-3}$ (8.192 MHz) Timing

No.	Characteristic	Sym.	Min.	Typ.[2]	Max.	Units	Notes[3]
1	$\overline{FPO}$0-3 Output Frame Pulse Setup Time	t_{FPOS}	60.0		62.0	ns	C_L=30 pF
2	$\overline{FPO}$0-3 Output Frame Pulse Hold Time	t_{FPOH}	60.0		62.0	ns	C_L=30 pF
3	$\overline{CKO}$0-3 Output Clock Period	t_{CKOP}	121.5		122.5	ns	C_L=30 pF

Note 1: Characteristics are over recommended operating conditions unless otherwise stated.

Note 2: Typical figures are at 25°C, V_{DD_CORE} at 1.8 V and V_{DD_IO} at 3.3 V and are for design aid only: not guaranteed and not subject to production testing.

Note 3: $\overline{CKo}$ clock source set to internal 131 MHz APLL, and CKi0 and FPi0 meet all the timing requirements.

Note 4: When CKo source is set to one of the CKi/FPi, its output timings directly follow its source.

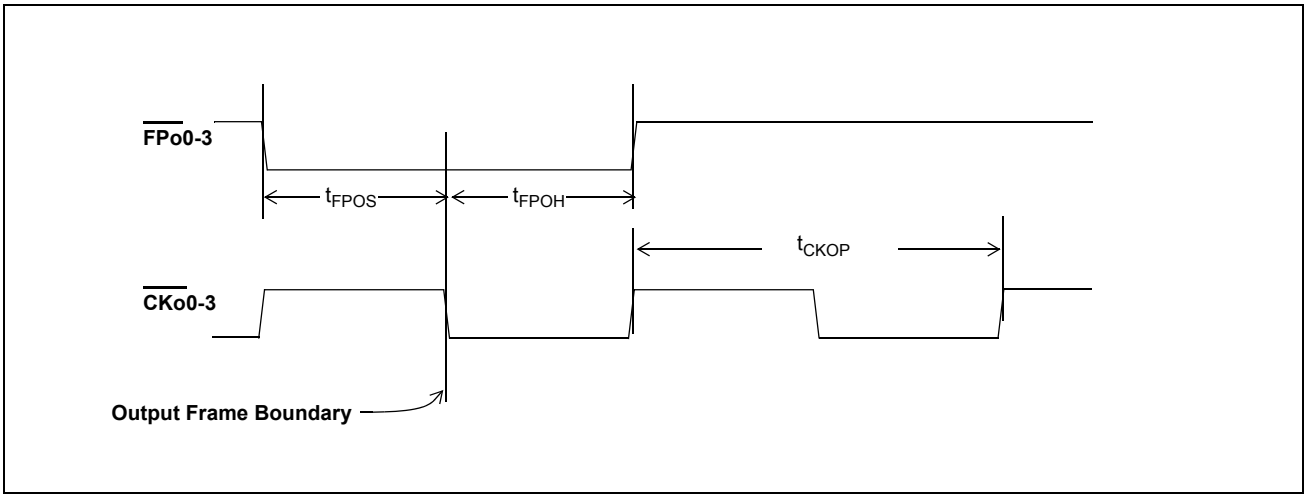

Figure 14 - ST-Bus Frame Pulse and Clock Output Timing

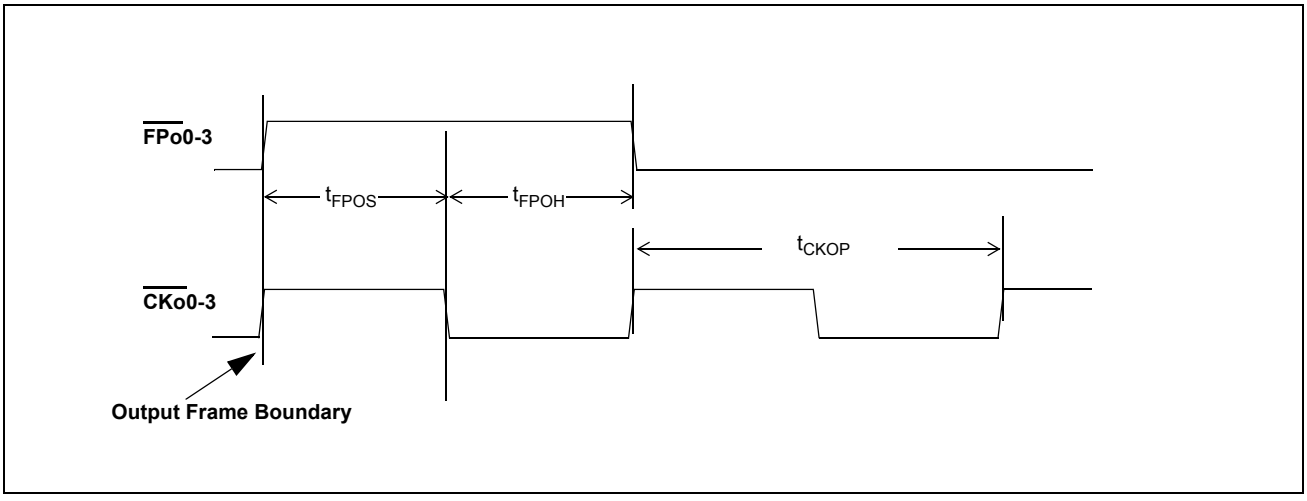

Figure 15 - GCI Frame Pulse and Clock Output Timing

AC Electrical Characteristics - Output Clock Jitter Generation

No.	Characteristic	Max.	Units	Notes[1,2]
1	Jitter at $\overline{\text{CKO}}$0-3 (8.192 MHz)	1050	ps-pp	
2	Jitter at $\overline{\text{CKO}}$0-3 (16.384 MHz)	1030	ps-pp	
3	Jitter at $\overline{\text{CKO}}$0-3 (32.768 MHz)	920	ps-pp	
4	Jitter at $\overline{\text{CKO}}$0-3 (65.536 MHz)	810	ps-pp	

Note 1: $\overline{\text{CKi}}$ at 8 MHz, output clock source set to internal APLL. No jitter presented on the Cki0 input.

Note 2: For 65.536 MHz output clock, the total loading on the output should not be larger than 10pF.

AC Electrical Characteristics[1] - Serial Data Timing[2] to $\overline{CKi}$

No.	Characteristic (Figure)	Sym.	Min.	Typ.[3]	Max.	Units	Notes[4]
1	$\overline{CKi}$ to $\overline{CKo}$ Positive edge Propagation Delay	t_{CKDP}	3.5		8	ns	$\overline{CKo}$ clock source = $\overline{CKi}$
			4.1		9.2	ns	$\overline{CKo}$ Clock source = Internal 131 MHz APLL output
2	$\overline{CKi}$ to $\overline{CKo}$ Negative edge Propagation Delay	t_{CKDN}	4.5		9.2	ns	$\overline{CKo}$ clock source = $\overline{CKi}$
			5		10.1	ns	$\overline{CKo}$ Clock source = Internal 131 MHz APLL output
3	STi to posedge $\overline{CKi}$ setup	t_{SIPS}	-0.8			ns	
4	STi to posedge $\overline{CKi}$ hold	t_{SIPH}	5.9			ns	
5	STi to negedge $\overline{CKi}$ setup	t_{SINS}	-0.8			ns	
6	STi to negedge $\overline{CKi}$ hold	t_{SINH}	5.9			ns	
7	Posedge $\overline{CKi}$ to Output Data Valid	t_{SIPV}	4.8		11.6	ns	SToA[5]
			4.1		13.7	ns	SToB, C, D[5]
8	Negedge $\overline{CKi}$ to Output Data Valid	t_{SINV}	5.8		12.9	ns	SToA[5]
			4.5		14.8	ns	SToB, C, D[5]
9	Posedge $\overline{CKi}$ to Output Data tri-state	t_{SIPZ}	4.3		14.6	ns	SToA[5]
			4.6		14.5	ns	SToB, C, D[5]
10	Negedge $\overline{CKi}$ to Output Data tri-state	t_{SINZ}	5.3		13	ns	SToA[5]
			5.7		13.6	ns	SToB, C, D[5]
11	ODE to Output Data tri-state	t_{SOZ}			10	ns	SToA C_L = 30 pF, R_L = 1K[5]
					11	ns	SToB, C, D C_L = 30 pF, R_L = 1K[5]
12	ODE to Output Data Enable	t_{SOE}	4.5		15	ns	SToA[5]
			6		20	ns	SToB, C, D[5]

Note 1: Characteristics are over recommended operating conditions unless other wise stated.

Note 2: All of these specifications refer to ST-BUS inputs and outputs with clock source set to $\overline{CKi}$.

Note 3: Typical figures are at 25°C, V_{DD_CORE} at 1.8 V and V_{DD_IO} at 3.3 V and are for design aid only: not guaranteed and not subject to production testing.

Note 4: Loads on all serial outputs set to 30 pF.

Note 5: High Impedance is measured by pulling to the appropriate rail with R_L, with timing corrected to cancel time taken to discharge C_L.

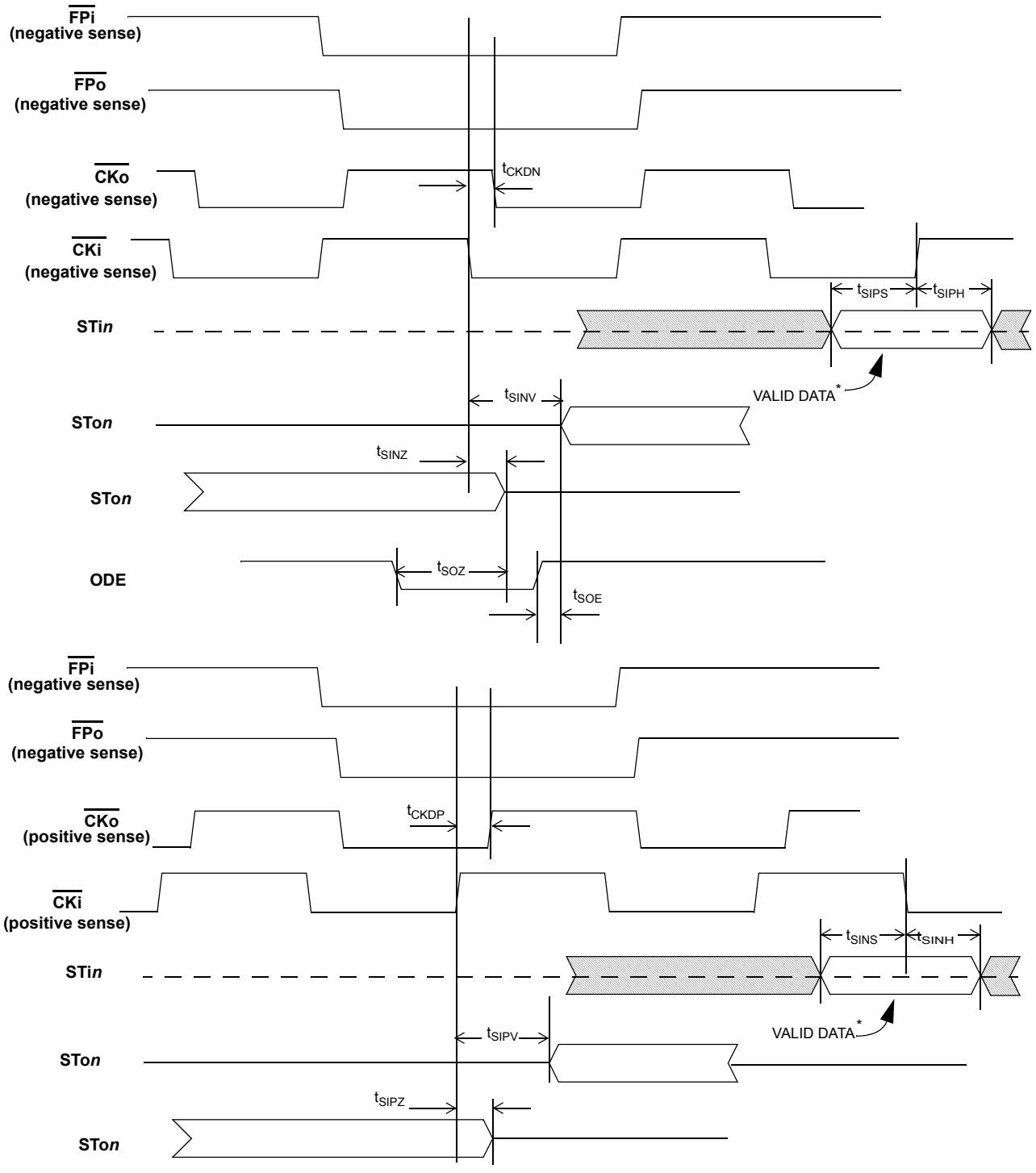

Note 1: $\overline{\text{CKi}}$ frequency is assumed to be twice of the STin data rate, so that the sampling point is at the 3/4 point of the bit cell, or 1 1/2 clock period after the active clock edge

Note 2: If $\overline{\text{CKi}}$ frequency is the same as the STin data rate, the sampling point moves to the 1/2 point of the bit cell, or 1/2 clock period after the active clock edge.

Figure 16 - Serial Data Timing to $\overline{\text{CKi}}$

AC Electrical Characteristics - Serial Data Timing[1] to $\overline{CKo}$[2]

No.	Characteristic (Figure)	Sym.	Min.	Typ.[3]	Max.	Units	Notes[4]
1	STi to posedge $\overline{CKo}$ setup	t_{SOPS}	7.3			ns	
2	STi to posedge $\overline{CKo}$ hold	t_{SOPH}	-2.0			ns	
3	STi to negedge $\overline{CKo}$ setup	t_{SONS}	7.3			ns	
4	STi to negedge $\overline{CKo}$ hold	t_{SONH}	-2.0			ns	
5	Posedge $\overline{CKo}$ to Output Data Valid	t_{SOPV}	0.1		2.7	ns	SToA^4
			0		4.6	ns	SToB, C, D^4
6	Negedge $\overline{CKo}$ to Output Data Valid	t_{SONV}	-1.2		1.7	ns	SToA^4
			-1.6		3.7	ns	SToB, C, D^4
7	Posedge $\overline{CKo}$ to Output Data tri-state	t_{SOPZ}	0.9		4.9	ns	SToA^4
			0.1		5.1	ns	SToB, C, D^4
8	Negedge $\overline{CKo}$ to Output Data tri-state	t_{SONZ}	0.4		4.7	ns	SToA^4
			0		4.8	ns	SToB, C, D^4

Note 1: Data Capture points vary with respect to $\overline{CKo}$ edge depending on clock rates & fractional delay settings.

Note 2: All of these specifications refer to ST-BUS inputs, ST-BUS outputs and $\overline{CKo}$ outputs set to internal clock source.

Note 3: Typical figures are at 25°C, V_{DD_CORE} at 1.8 V and V_{DD_IO} at 3.3 V and are for design aid only: not guaranteed and not subject to production testing.

Note 4: Loads on all serial outputs set to 30 pF.

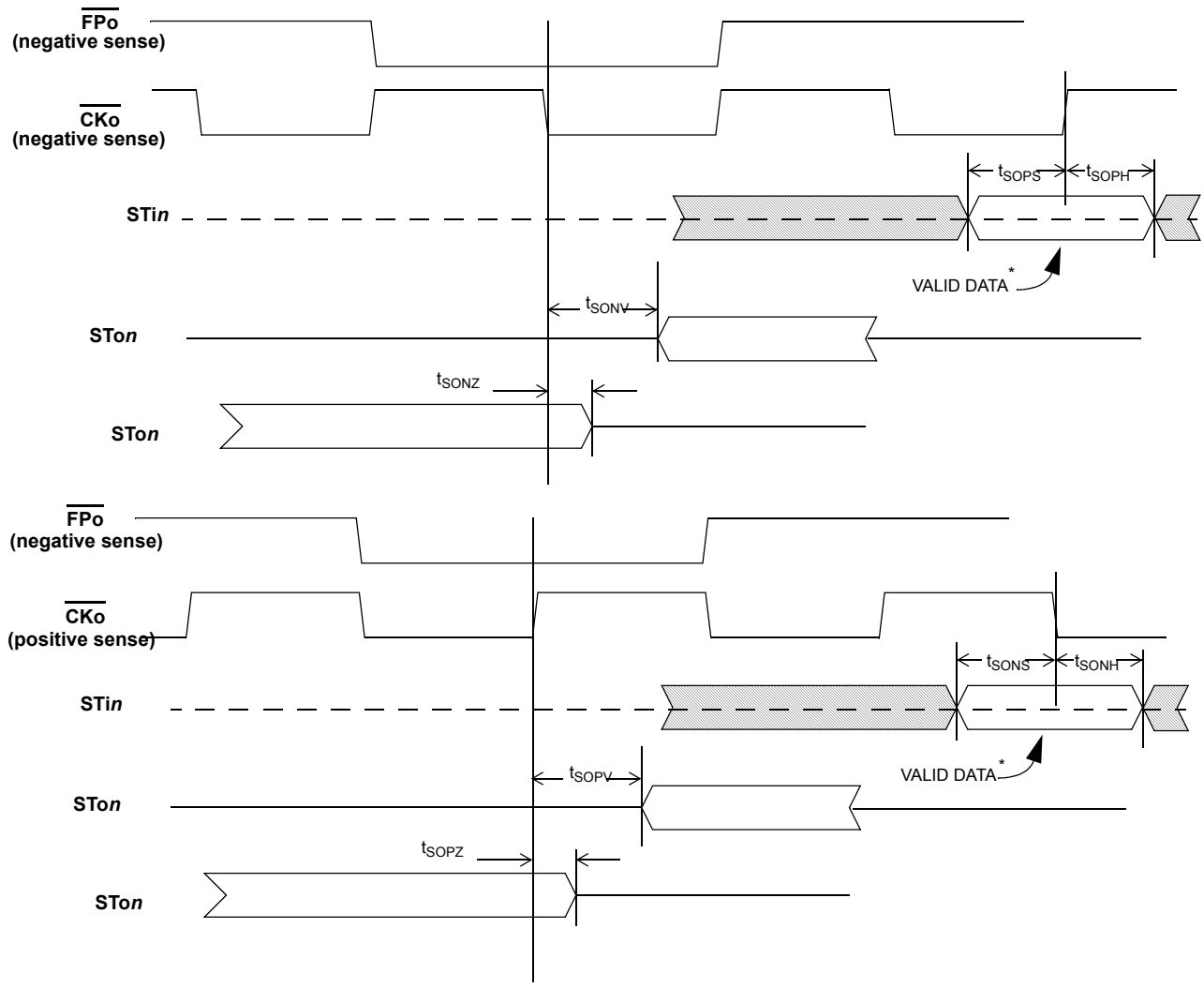

Note 1 : $\overline{\text{CKo}}$ frequency is assumed to be twice of the STin data rate, so that the sampling point is at the 3/4 point of the bit cell, or 1 1/2 clock period after the active clock edge

Note 2: If $\overline{\text{CKo}}$ frequency is the same as the STin data rate, the sampling point moves to the 1/2 point of the bit cell, or 1/2 clock period after the active clock edge.

Figure 17 - Serial Data Timing to $\overline{\text{CKo}}$

AC Electrical Characteristics - $\overline{CKo}$ to Other $\overline{CKo}$[1] Skew

No.	Characteristic (Figure 17)	Sym.	Min.	Typ.[2]	Max.	Units	Notes
1	$\overline{CKo1}$ to $\overline{CKo0}$ skew	$t_{CKOS1-0}$	0		1.2	ns	
2	$\overline{CKo2}$ to $\overline{CKo0}$ skew	$t_{CKOS2-0}$	0		1.2	ns	
3	$\overline{CKo1}$ to $\overline{CKo3}$ skew	$t_{CKOS1-3}$	0		1.2	ns	
4	$\overline{CKo2}$ to $\overline{CKo3}$ skew	$t_{CKOS2-3}$	0		1.2	ns	
5	$\overline{CKo3}$ to $\overline{CKo0}$ skew	$t_{CKOS3-0}$	-0.6		0.6	ns	
6	$\overline{CKo2}$ to $\overline{CKo1}$ skew	$t_{CKOS2-1}$	-0.6		0.6	ns	

Note 1: All of these specifications refer to ST-BUS inputs, ST-BUS outputs and $\overline{CKo}$ outputs set to internal clock source.

Note 2: Typical figures are at 25°C, V_{DD_CORE} at 1.8 V and V_{DD_IO} at 3.3 V and are for design aid only: not guaranteed and not subject to production testing.

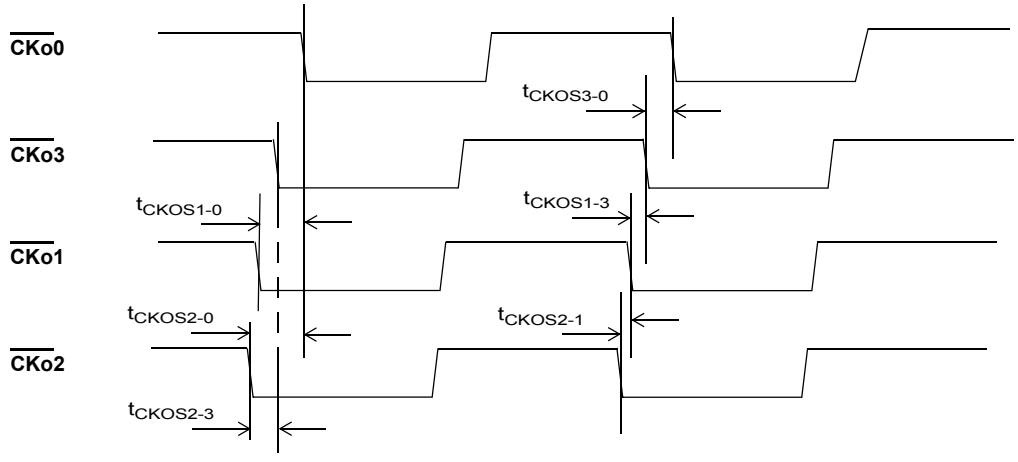

Figure 18 - CKo to other CKo Skew

AC Electrical Characteristics - Microprocessor Bus Interface

No	Characteristics (Figure 19, & Figure 19)	Sym.	Min.	Typ.[1]	Max.	Units	Notes
1	$\overline{DS}$ Recovery	t_{DSRE}	5			ns	
2	$\overline{CS}$ Recovery	t_{CSRE}	0			ns	
3	$\overline{CS}$ asserted setup to $\overline{DS}$ asserted	t_{CSS}	0			ns	
4	Address, SIZ1-0, R/$\overline{W}$ setup to $\overline{DS}$ asserted	t_{ADS}	0			ns	
5	$\overline{CS}$ hold from $\overline{DS}$ deasserted	t_{CSH}	0			ns	
6	Address, SIZ0-1, R/$\overline{W}$ hold from $\overline{DS}$ deasserted	t_{ADH}	0			ns	
7	Data valid to $\overline{DTA}$ asserted on read	t_{DSR}	0			ns	C_L = 50 pF, R_L = 1k[2]
8	$\overline{CS}$ deasserted to Data tri-stated on read	t_{DZ}			5	ns	C_L = 50 pF, R_L = 1k[2]
9	Data setup to $\overline{DS}$ asserted on write	t_{WDS}	0			ns	
10	$\overline{CS}$ asserted to $\overline{WAIT}$ deasserted	t_{CSWA}			9	ns	C_L = 30 pF, R_L = 1K[2]
11	Data hold from $\overline{DTA}$ asserted on write	t_{DHW}	0			ns	
12	$\overline{DS}$ asserted to $\overline{WAIT}$ Asserted	t_{WDD}			9	ns	C_L = 50 pF, R_L = 1k[2]
13	$\overline{WAIT}$ deasserted to $\overline{DTA}$/$\overline{BERR}$ asserted skew	t_{AKS}	0		10	ns	C_L = 50 pF, R_L = 1k[2]
14	$\overline{DS}$ asserted to $\overline{DTA}$ Asserted	t_{AKD}	35		155	ns	Connection Memory
			50		75	ns	All other registers
15	$\overline{DS}$ deasserted to $\overline{DTA}$ Deasserted	t_{AKH}			7	ns	C_L = 30 pF, R_L = 1K[2]
16	$\overline{CS}$ deasserted to $\overline{DTA}$ tri-stated	t_{DTHZ}			13	ns	C_L = 30 pF, R_L = 1K[2]
17	$\overline{CS}$ deasserted to $\overline{WAIT}$ tri-stated	t_{WAHZ}			6	ns	C_L = 30 pF, R_L = 1K[2]
18	$\overline{BE}$ or $\overline{UDS}$/$\overline{LDS}$ skew	t_{DSK}			20	ns	
19	$\overline{BE}$ or $\overline{UDS}$/$\overline{LDS}$ to $\overline{DS}$ set-up	t_{BEDS}	0				

Note 1: Typical figures are at 25°C, V_{DD_CORE} at 1.8 V and V_{DD_IO} at 3.3 V and are for design aid only: not guaranteed and not subject to production testing.

Note 2: High Impedance is measured by pulling to the appropriate rail with R_L, with timing corrected to cancel time taken to discharge C_L.

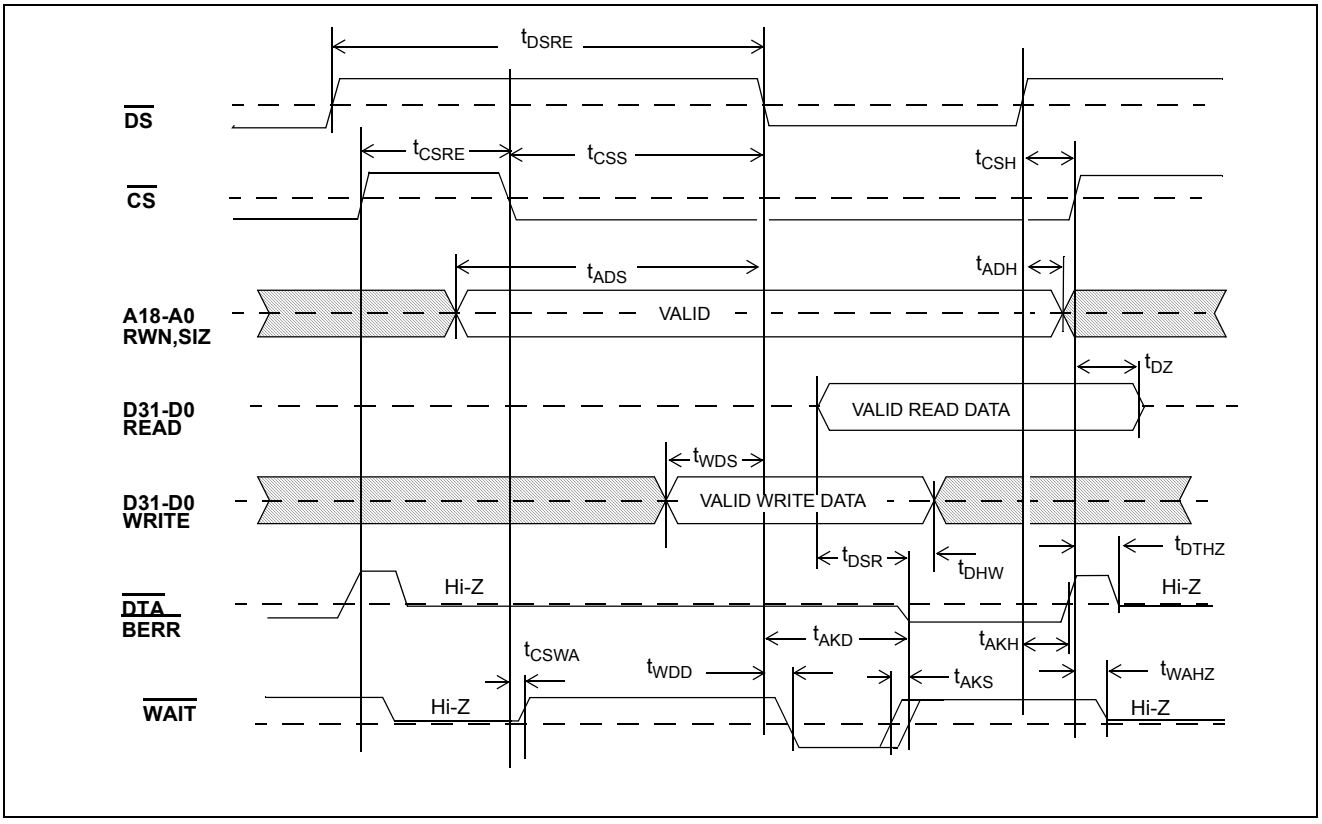

Figure 19 - Microprocessor Bus Interface Timing

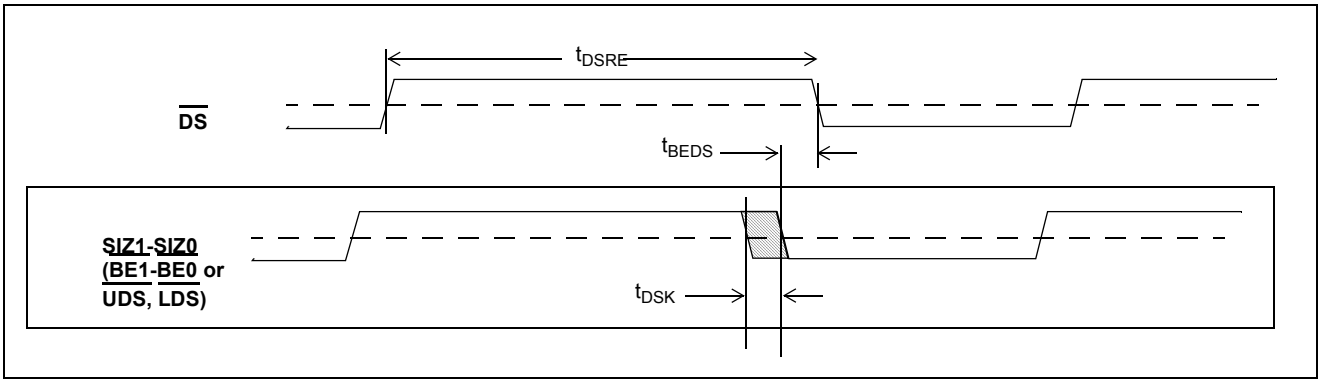

Figure 20 - Intel Mode Timing

AC Electrical Characteristics[1] - IEEE 1149.1 Test Port and $\overline{PWR}$ Pin Timing

No.	Characteristic (Figure 21)	Sym.	Min.	Typ.[2]	Max.	Units	Notes
1	TCK Clock Period	t_{TCKP}	100			ns	
2	TCK Clock Frequency	t_{TCKF}			10	MHz	
3	TCK Clock Pulse Width High	t_{TCKH}	20			ns	
4	TCK Clock Pulse Width Low	t_{TCKL}	20			ns	
5	TMS Set-up Time	t_{TMSS}	10			ns	
6	TMS Hold Time	t_{TMSH}	10			ns	
7	TDi Input Set-up Time	t_{TDIS}	20			ns	
8	TDi Input Hold Time	t_{TDIH}	60			ns	
9	TDo Output Delay	t_{TDOD}			20	ns	C_L = 30 pF
10	$\overline{TRST}$ pulse width	t_{TRSTW}	20			ns	
11	$\overline{PWR}$ pulse width	t_{TPWR}	20			ns	

Note 1: Characteristics are over recommended operating conditions unless otherwise stated.

Note 2: Typical figures are at 25°C, V_{DD_CORE} at 1.8 V and V_{DD_IO} at 3.3 V and are for design aid only: not guaranteed and not subject to production testing.

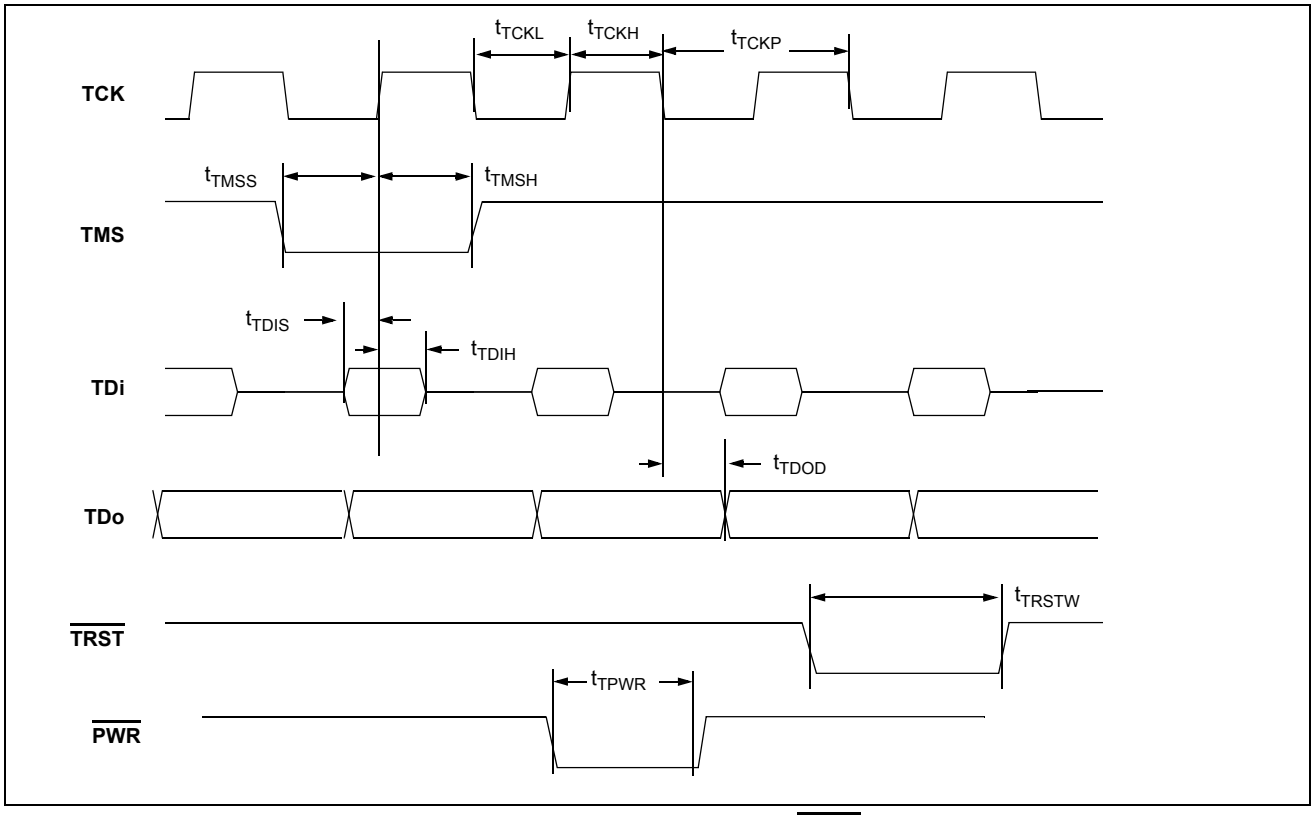

Figure 21 - IEEE 1149.1 Test Port & $\overline{PWR}$ Reset Timing

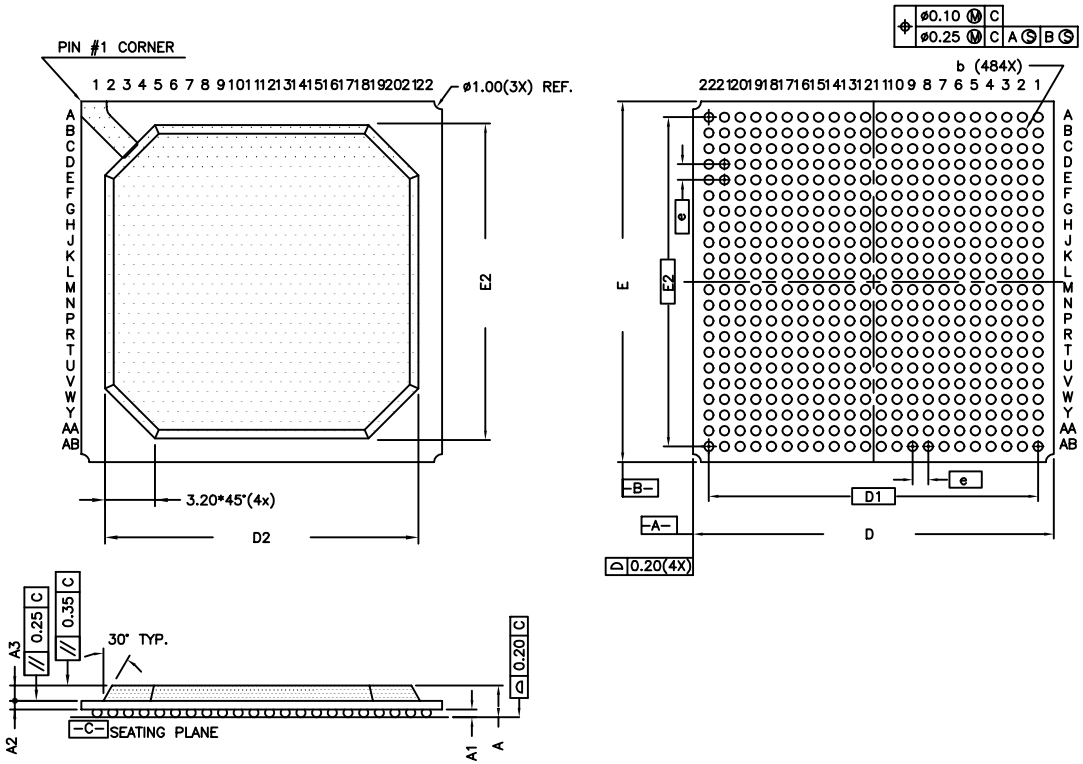

SYMBOL	MILLIMETER		
	MIN	NOM	MAX
A	1.90	2.03	2.16
A1	0.40	0.50	0.60
A2	0.56 Ref.		
A3	0.97 Ref.		
b	0.50	0.60	0.70
D	22.80	23.00	23.20
D1	21.00 Ref.		
D2	20.00 Ref.		
E	22.80	23.00	23.20
E1	21.00 Ref.		
E2	20.00 Ref.		
e	1.00 Ref.		

Confirms to JEDEC MS-034
AAJ-1 iss. A

NOTE:

1. ALL DIMENSIONS AND TOLERANCES CONFORM TO ANSI Y14.5M-1982.
2. DIMENSION "b" IS MEASURED AT THE MAXIMUM SOLDER BALL DIAMETER
3. PRIMARY DATUM -C- AND SEATING PLANE ARE DEFINED BY THE SPHERICAL CROWNS OF THE SOLDER BALLS.
4. ALL DIMENSIONS ARE IN MILLIMETERS.
5. NOT TO SCALE.
6. DETAILS OF A1 CORNER ARE OPTIONAL, AND MAY CONSIST OF INK DOT, LASER MARK OR METALISED MARKING, BUT MUST BE LOCATED WITHIN ZONE INDICATED.

© Zarlink Semiconductor 2003 All rights reserved.

ISSUE	1			
ACN				
DATE	15 Jul 03			
APPRD.				

ZARLINK SEMICONDUCTOR

Previous package codes

Package Code GA

Package Outline for 484, PBGA (23x23)mm, 1.00 Pitch

100770

For more information about all Zarlink products visit our Web Site at

www.zarlink.com

Information relating to products and services furnished herein by Zarlink Semiconductor Inc. or its subsidiaries (collectively "Zarlink") is believed to be reliable. However, Zarlink assumes no liability for errors that may appear in this publication, or for liability otherwise arising from the application or use of any such information, product or service or for any infringement of patents or other intellectual property rights owned by third parties which may result from such application or use. Neither the supply of such information or purchase of product or service conveys any license, either express or implied, under patents or other intellectual property rights owned by Zarlink or licensed from third parties by Zarlink, whatsoever. Purchasers of products are also hereby notified that the use of product in certain ways or in combination with Zarlink, or non-Zarlink furnished goods or services may infringe patents or other intellectual property rights owned by Zarlink.

This publication is issued to provide information only and (unless agreed by Zarlink in writing) may not be used, applied or reproduced for any purpose nor form part of any order or contract nor to be regarded as a representation relating to the products or services concerned. The products, their specifications, services and other information appearing in this publication are subject to change by Zarlink without notice. No warranty or guarantee express or implied is made regarding the capability, performance or suitability of any product or service. Information concerning possible methods of use is provided as a guide only and does not constitute any guarantee that such methods of use will be satisfactory in a specific piece of equipment. It is the user's responsibility to fully determine the performance and suitability of any equipment using such information and to ensure that any publication or data used is up to date and has not been superseded. Manufacturing does not necessarily include testing of all functions or parameters. These products are not suitable for use in any medical products whose failure to perform may result in significant injury or death to the user. All products and materials are sold and services provided subject to Zarlink's conditions of sale which are available on request.

Purchase of Zarlink's I^2C components conveys a licence under the Philips I^2C Patent rights to use these components in and I^2C System, provided that the system conforms to the I^2C Standard Specification as defined by Philips.

Zarlink, ZL and the Zarlink Semiconductor logo are trademarks of Zarlink Semiconductor Inc.

Copyright Zarlink Semiconductor Inc. All Rights Reserved.

TECHNICAL DOCUMENTATION - NOT FOR RESALE