Ultra Low Cost 3-Pin Microprocessor Reset

Description

The V6340 monitors the supply voltage of any electronic system, and generates the appropriate Reset signal. The threshold must be chosen to the minimum allowed voltage which guarantees the good functionality of the system. As long as V_{DD} stays upside this voltage level, the output stays inactive. If V_{DD} drops below V_{TH}, the output gets active. The threshold voltage may be obtained in different versions: 2.6V, 3.0V, 3.7V and 4.4V.

Features

- SOT-23 package
- Reset output state guaranteed down to V_{DD} = 1V @ 25°C
- Low supply current: stays stable during switching
  versions B, H, N: typ. 19µA at V_{DD} = 5V
  other versions: typ. 38µA at V_{DD} = 5V
- ±2.5% voltage threshold accuracy
- High noise immunity
- No external components required
- Push-pull or Open drain output
- Pin compatible with MAX 809 in SOT-23, by appropriate layout on PCB
- TTL output compatibility

Applications

Applications needing a voltage detection:

- Computer electronics
- White / Brown goods
- Industrial electronics
- Telecom systems
- Hand-held systems

Typical Operating Configuration

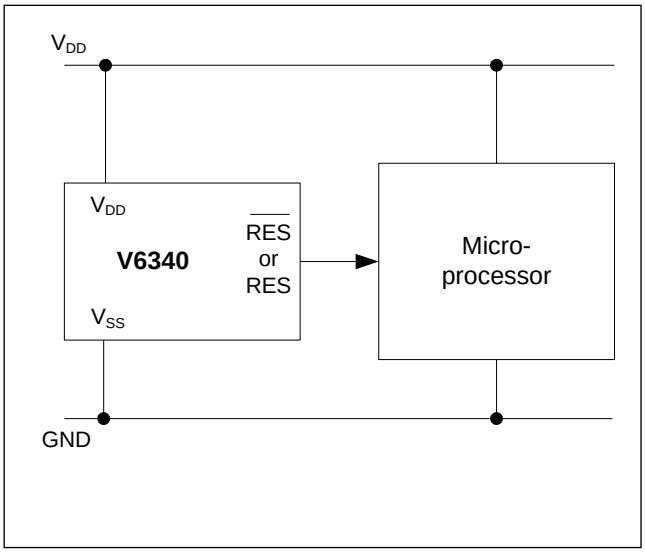

Fig. 1

Pin Assignment

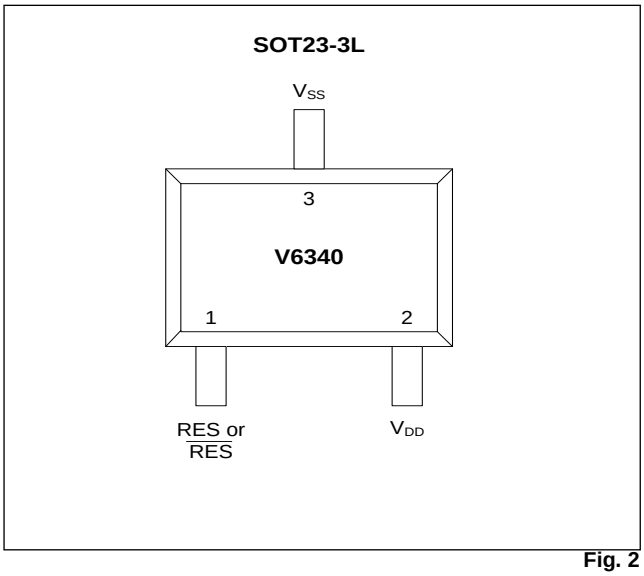

Fig. 2

Absolute Maximum Ratings

Parameter	Symbol	Conditions
Voltage at V_{DD} to V_{SS}	V_{DD}	-0.3V to +8V
Minimum voltage at RES or $\overline{RES}$	V_{min}	V_{SS} – 0.3V
Maximum voltage at RES or $\overline{RES}$	V_{max}	V_{DD} + 0.3V
Storage Temperature Range	T_{STO}	-65°C to +150°C

Table 1

Stresses above these listed maximum ratings may cause permanent damages to the device. Exposure beyond specified operating conditions may affect device reliability or cause malfunction.

Handling Procedures

This device has built-in protection against high static voltages or electric fields; however, it is advised that normal precautions be taken as for any other CMOS component. Unless otherwise specified, proper operation can only occur when all terminal voltages are kept within the voltage range.

Operating Conditions

Parameter	Symbol	Min	Max	Unit
Operating Temperature [1)]	T_A	-40	+125	°C
Positive Supply Voltage [2)]	V_{DD}	1	5.5	V

Table 2

[1)] The maximum operating temperature is confirmed by sampling at initial device qualification. In production, all devices are tested at +25°C

[2)] V_{DD} = 1V guaranteed at +25°C (see Fig. 14 for more information)

Electrical Characteristics

T_A = +25°C, unless otherwise specified

Parameter	Symbol	Test Conditions	Min.	Typ.	Max.	Unit
Supply current	I_{DD}	V_{DD} = 5V, output open		38	50	µA
Threshold voltage	V_{TH}	C, I, O	2.94	3.02	3.10	V
	V_{TH}	D, J, P	3.62	3.72	3.82	V
	V_{TH}	F, L, R	4.27	4.39	4.51	V
Threshold hysteresis	V_{HYS}			5		mV
RES Output Low Level	V_{OL}	V_{DD} = 1.6V, I_{OL} = 1mA		200	270	mV
	V_{OL}	V_{DD} = 2.5V, I_{OL} = 2mA		195	250	mV
	V_{OL}	V_{DD} = 3.5V, I_{OL} = 3mA		198	250	mV
	V_{OL}	V_{DD} = 5V, I_{OL} = 4mA		185	250	mV
RES Output High Level	V_{OH}	V_{DD} = 1.6V, I_{OH} = -1mA	1.25	1.36		V
	V_{OH}	V_{DD} = 2.5V, I_{OH} = -1.5mA	2.2	2.3		V
	V_{OH}	V_{DD} = 3.5V, I_{OH} = -2.5mA	3.15	3.27		V
	V_{OH}	V_{DD} = 5V, I_{OH} = -3.5mA	4.65	4.76		V
Output leakage current[1)]	I_{LEAK}	V_{DD} = 5V		0.005	1	µA

Only for version B, H and N

Parameter	Symbol	Test Conditions	Min.	Typ.	Max.	Unit
Supply current	I_{DD}	V_{DD} = 5V, output open		19	31	µA
Threshold voltage	V_{TH}	B, H, N	2.56	2.65	2.74	V
Threshold hysteresis	V_{HYS}			32		mV

Table 3

[1)] Only for Open drain versions

Timing Waveform

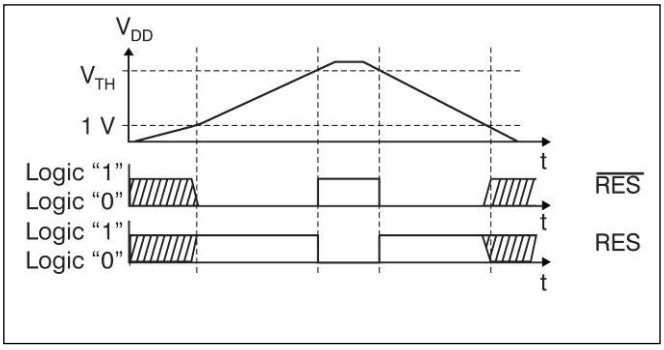

Fig.3

Block Diagram

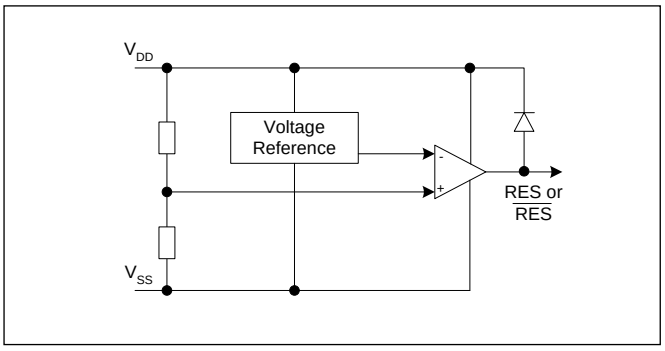

Fig.4

Typical Characteristics

Normalized V_{OL} vs. Temperature

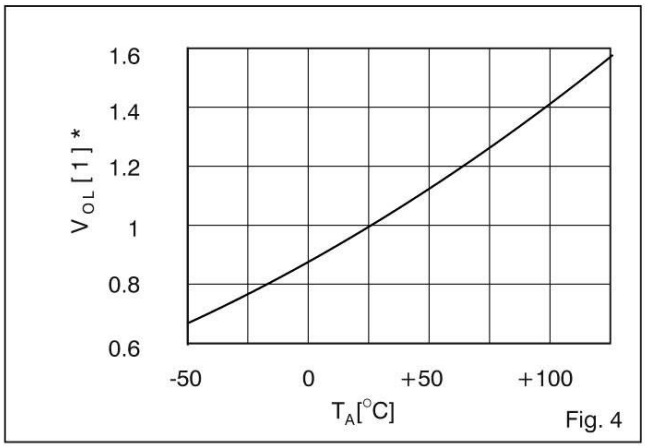

Fig. 4

Normalized V_{OH} vs. Temperature

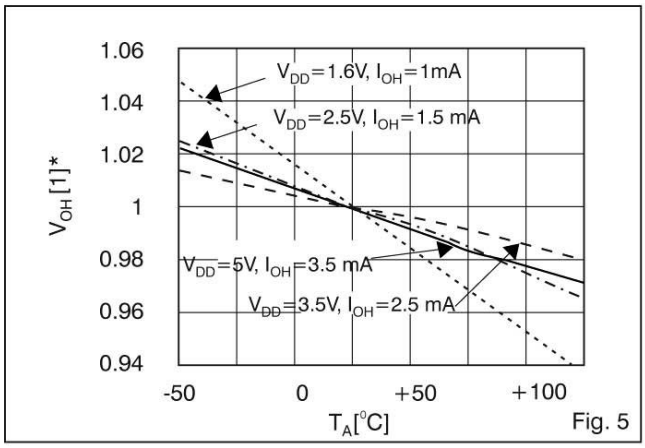

Fig. 5

V_{OL} vs. Output Current

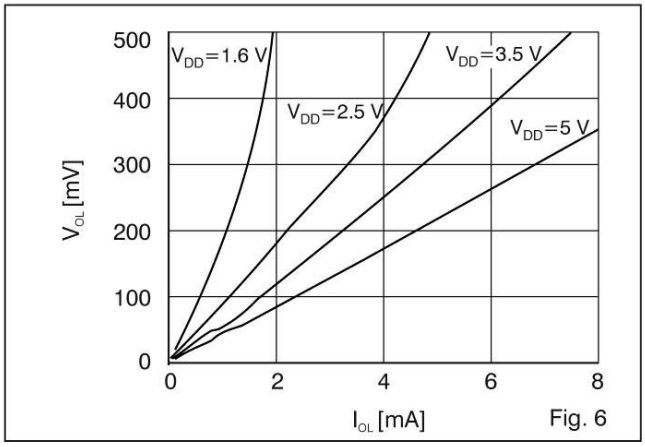

Fig. 6

V_{DD} - V_{OH} vs. Output Current

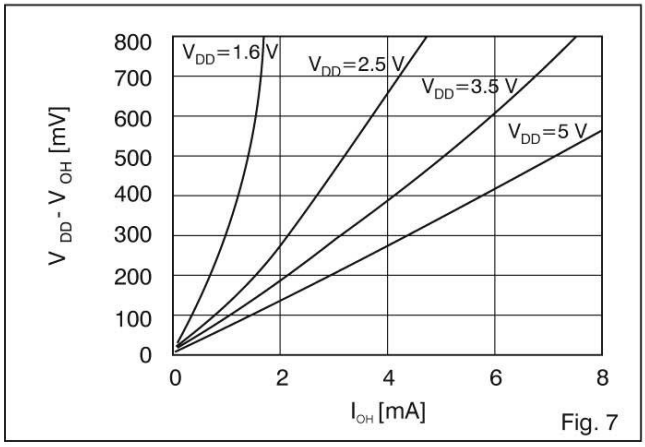

Fig. 7

V_{OL} vs. Supply Voltage

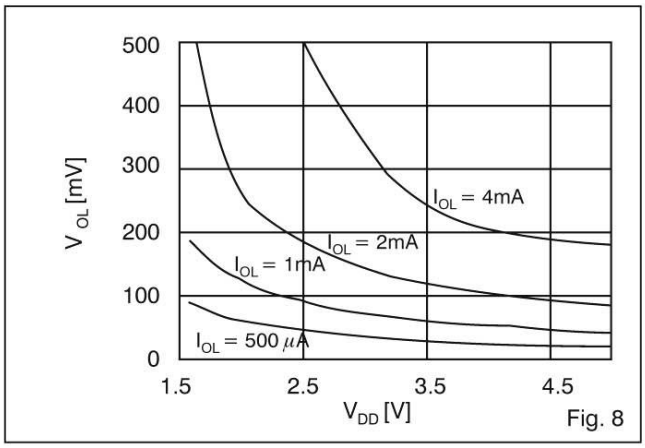

Fig. 8

V_{DD} - V_{OH} vs. Supply Voltage

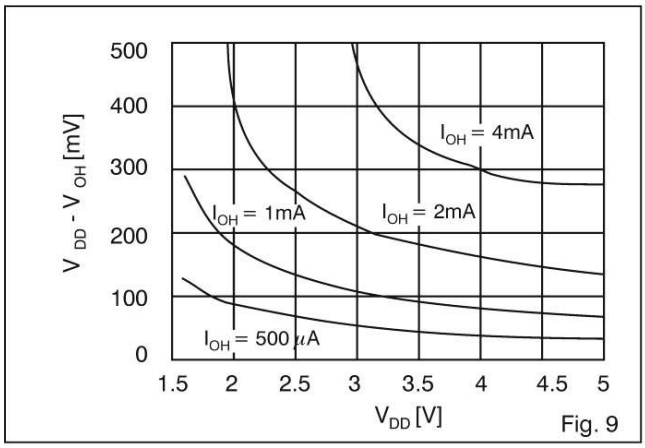

Fig. 9

[1]* Multiply value at +25°C by this factor to determine the value at temperature

Copyright ©2016, EM Microelectronic-Marin SA

Supply Current vs. Temperature

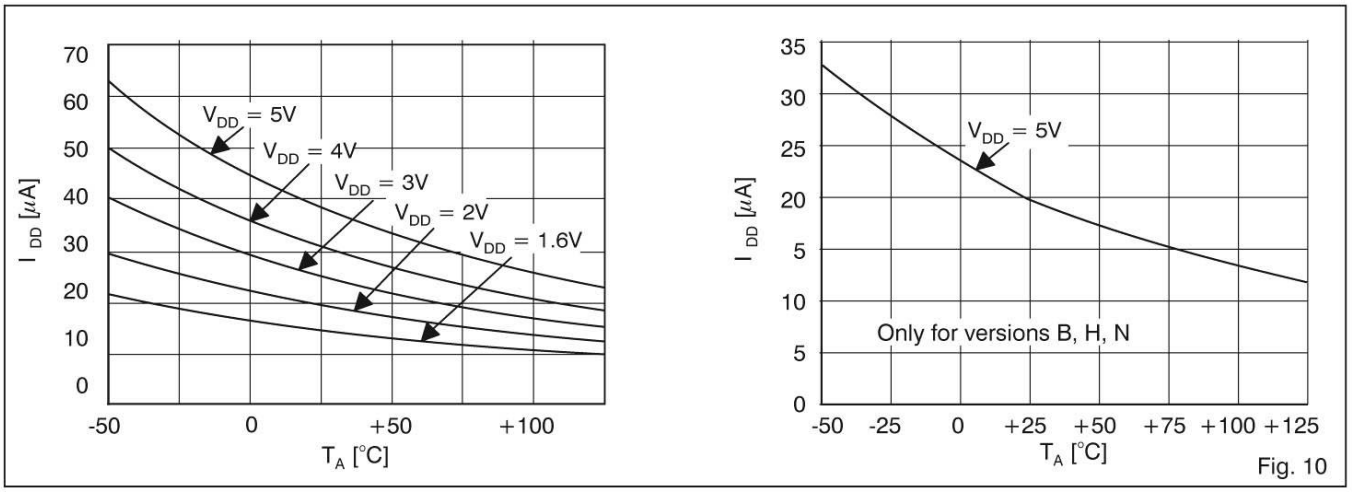

Fig. 10

Normalized Threshold vs. Temperature

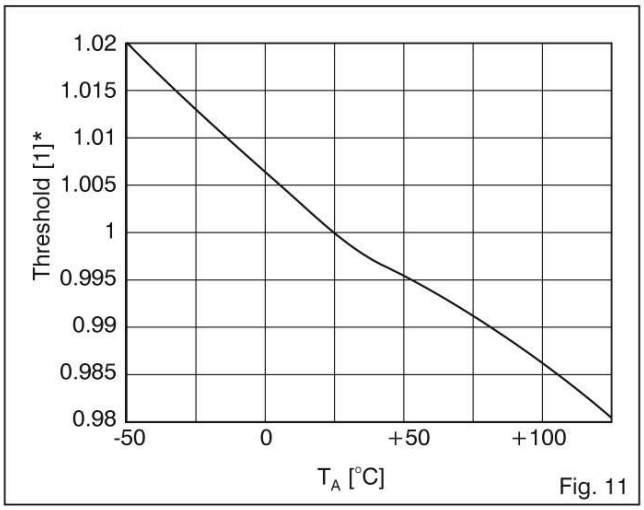

Fig. 11

Typical Sensivity vs. Temperature

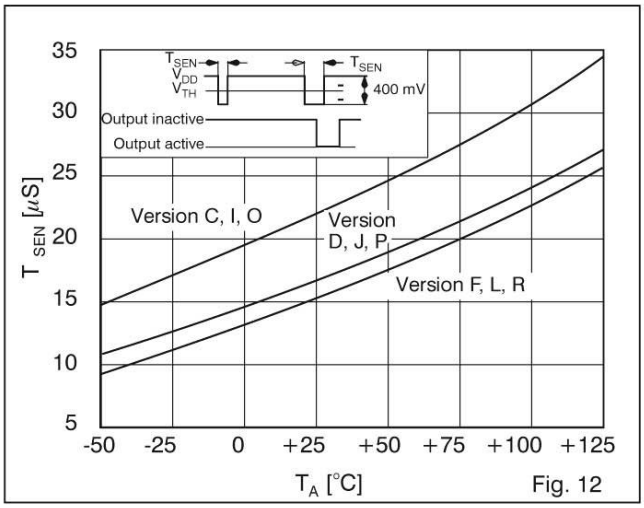

Fig. 12

Typical Sensivity vs. Temperature

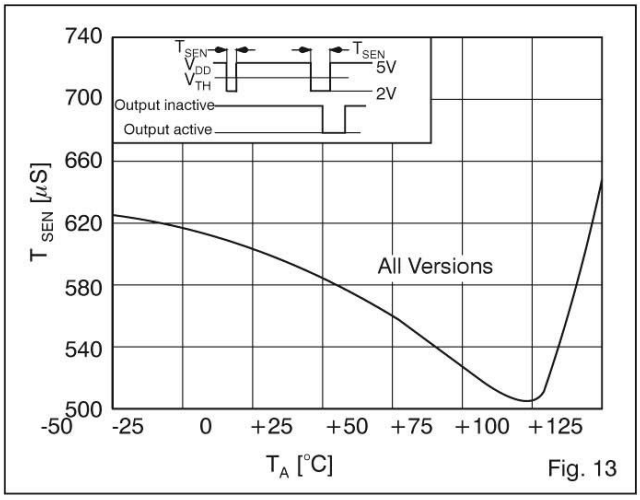

Fig. 13

Typical Minimum Operating Supply Voltage (V_{DD})

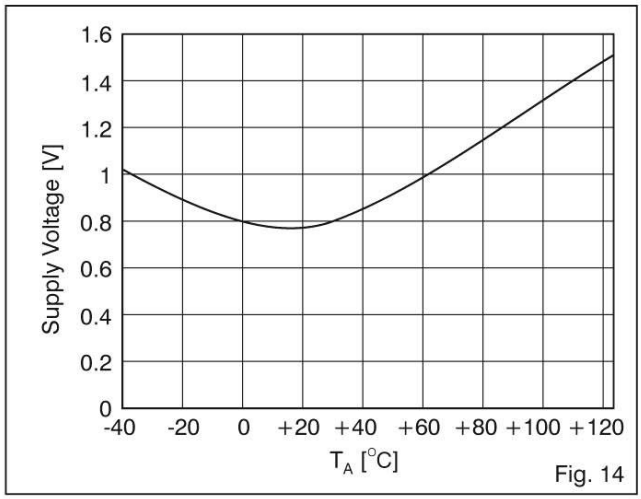

Fig. 14

[1]* Multiply value at +25°C by this factor to determine the value at temperature

Typical Applications

Voltage Monitor with Manual Reset

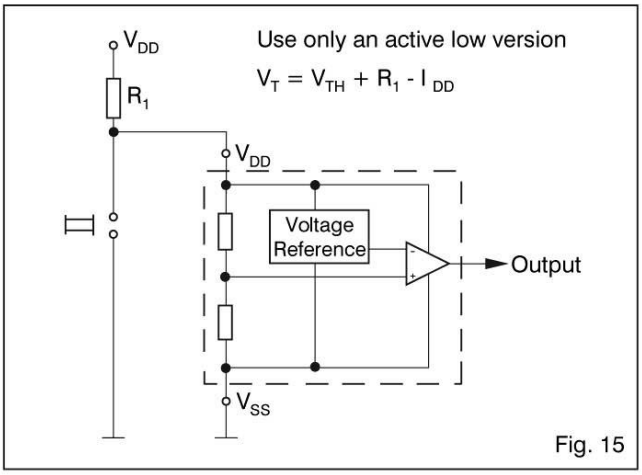

Fig. 15

Reset Circuit with Hysteresis

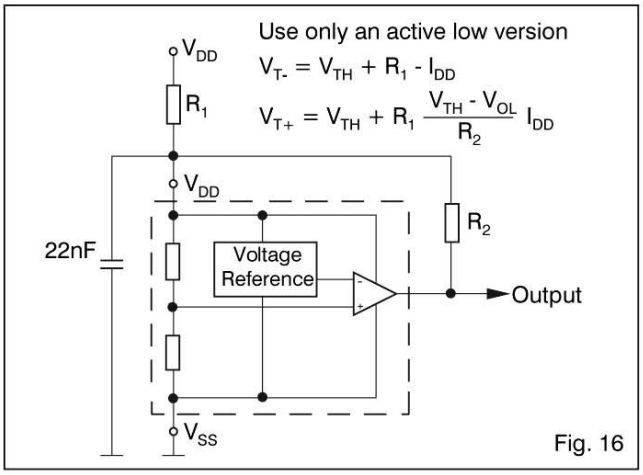

Fig. 16

Solar Cell Power O.K. Indicator

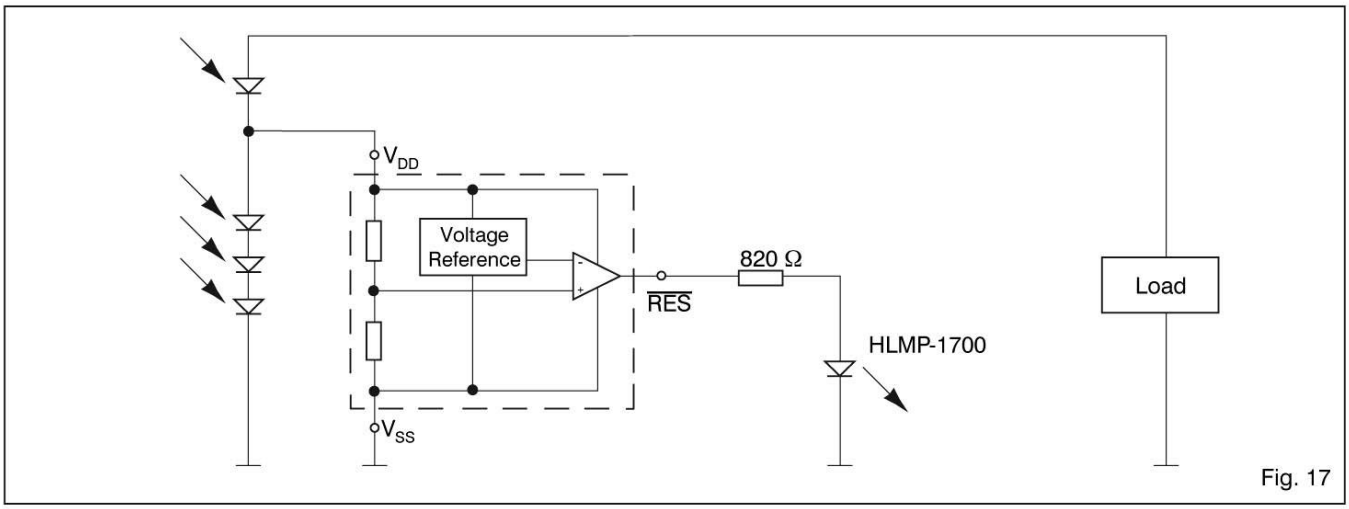

Fig. 17

Accurate High Voltage Monitoring

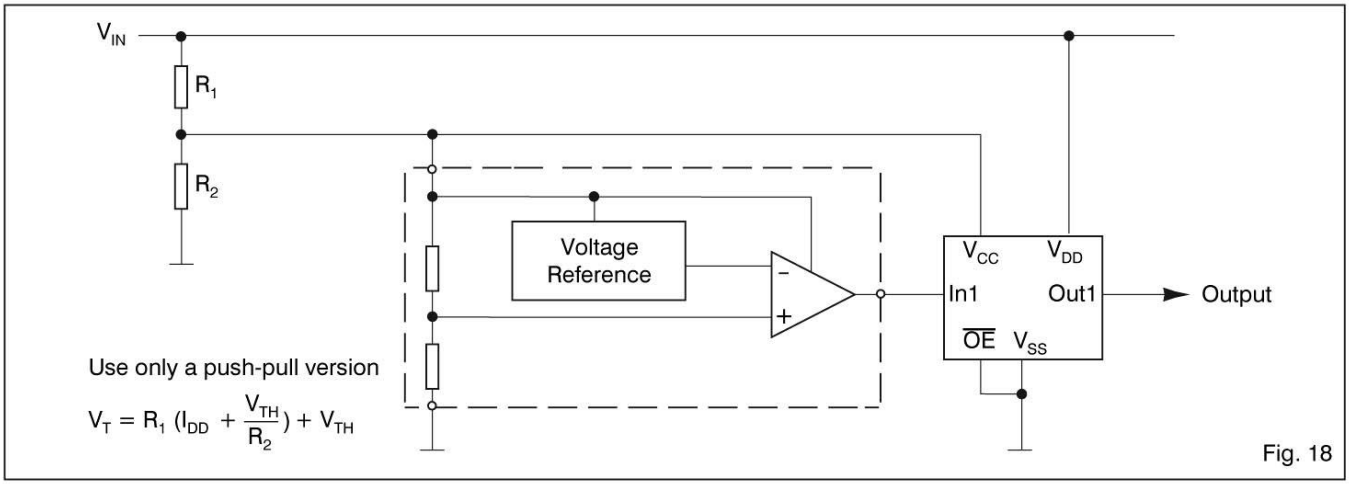

Fig. 18

Pin Description

SOT23-3L

Pin	Name	Function
1	RES or $\overline{RES}$	Reset output
2	V_{DD}	Positive supply
3	V_{SS}	Supply ground

Table 4

Packaging and Ordering Information

Dimensions of SOT23-3L Package

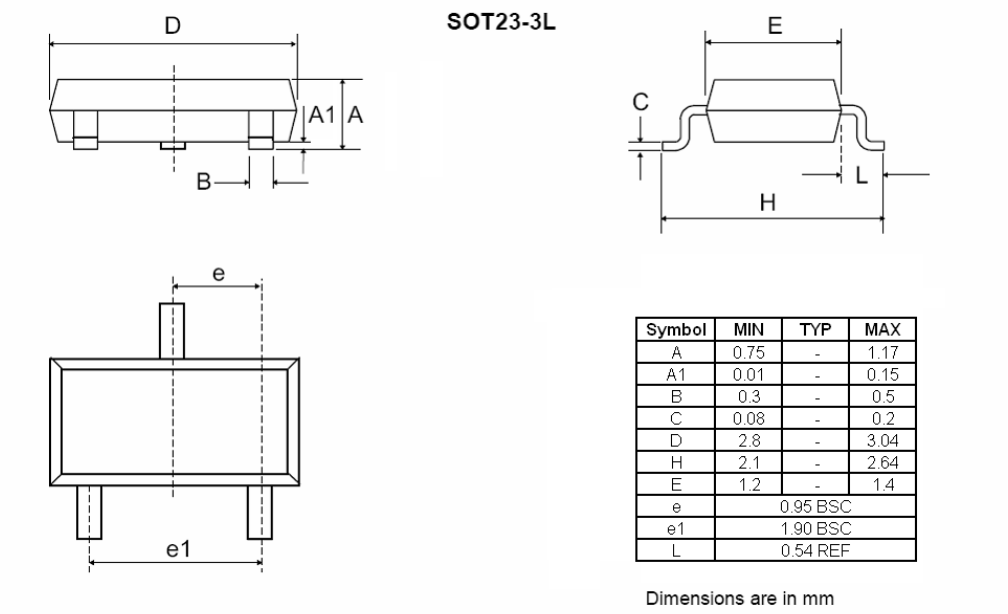

Symbol	MIN	TYP	MAX
A	0.75	-	1.17
A1	0.01	-	0.15
B	0.3	-	0.5
C	0.08	-	0.2
D	2.8	-	3.04
H	2.1	-	2.64
E	1.2	-	1.4
e	0.95 BSC		
e1	1.90 BSC		
L	0.54 REF		

Dimensions are in mm

Fig. 5

Copyright ©2016, EM Microelectronic-Marin SA

Ordering Information

Part Number: V6340 R SP3B +

Threshold Voltage and Output Type

	2.6V	3.0V	3.7V	4.4V
Push-pull, Reset active low	B	C	D	F
Push-pull, Reset active high	H	I	J	L
Open drain, Reset active low	N	O	P	R

Table 5

RoHS
+ = lead-free & green mold

Package and Delivery Form
SP3B = SOT23-3, Tape & Reel

Note: Subject to availability (see standard versions list below). When ordering, please give complete Part Number without space between letters: eg. V6340RSP3B, etc.

Standard Versions (Top Marking)

Marking for SOT23-3 package

Part Number	Threshold Voltage	Output type	Package and Delivery Form	Top Marking [1)]
V6340BSP3B+	2.6V	Active low push-pull	SOT23-3L, Tape & Reel 3000 pcs	E1##
V6340CSP3B+	3.0V			EC##
V6340DSP3B+	3.7V			BU##
V6340FSP3B+	4.4V			EA##
V6340LSP3B+	4.4V	Active high push-pull		E8##
V6340OSP3B+	3.0V	Active low open-drain		EB##
V6340PSP3B+	3.7V			ED##
V6340RSP3B+	4.4V			E3##

[1)] Top marking is standard from 2006. No bottom marking exists. Where ## refers to the lot number (EM internal reference only)

Traceability for small packages
Due to the limited space on the package surface, the bottom marking contains a limited number of characters that provide only partial information for lot traceability. Full information for complete traceability is however provided on the packing labels of the product at delivery from EM: It is highly recommended that the customer insures full lot traceability of EM product in his final product.

Standards Version (Samples)

Part Number
V6340BSP3B+
V6340CSP3B+
V6340DSP3B+
V6340FSP3B+

Part Number
V6340LSP3B+
V6340OSP3B+
V6340PSP3B+
V6340RSP3B+

Sample stock is generally held on **standard versions** only. Please contact factory for other versions not shown here and for availability of non standard versions.

EM Microelectronic-Marin SA ("EM") makes no warranties for the use of EM products, other than those expressly contained in EM's applicable General Terms of Sale, located at http://www.emmicroelectronic.com. EM assumes no responsibility for any errors which may have crept into this document, reserves the right to change devices or specifications detailed herein at any time without notice, and does not make any commitment to update the information contained herein.

No licenses to patents or other intellectual property rights of EM are granted in connection with the sale of EM products, neither expressly nor implicitly.

In respect of the intended use of EM products by customer, customer is solely responsible for observing existing patents and other intellectual property rights of third parties and for obtaining, as the case may be, the necessary licenses.

Important note: The use of EM products as components in medical devices and/or medical applications, including but not limited to, safety and life supporting systems, where malfunction of such EM products might result in damage to and/or injury or death of persons is expressly prohibited, as EM products are neither destined nor qualified for use as components in such medical devices and/or medical applications. The prohibited use of EM products in such medical devices and/or medical applications is exclusively at the risk of the customer