TUSB1310
USB 3.0 Transceiver

Data Manual

PRODUCTION DATA information is current as of publication date. Products conform to specifications per the terms of the Texas Instruments standard warranty. Production processing does not necessarily include testing of all parameters.

Literature Number: SLLSE16E
December 2009–Revised May 2011

Contents

1 PRODUCT OVERVIEW 7
1.1 Features 7
1.2 Target Applications 7
1.3 Introduction 8
1.4 Functional Block Diagram 8
2 PIN DESCRIPTIONS 10
2.1 Configuration Pins 10
2.2 PIPE 10
2.3 ULPI 13
2.3.1 ULPI Modes 13
2.4 Clocking 14
2.5 JTAG Interface 14
2.6 Reset and Output Control Interface 14
2.7 Strap Options 14
2.8 USB Interfaces 15
2.9 Special Connect 15
2.10 Power and Ground 15
3 FUNCTIONAL DESCRIPTION 17
3.1 Power On and Reset 17
3.1.1 RESETN and PHY_RESETN – Hardware Reset 17
3.1.2 ULPI Reset – Software Reset 17
3.1.3 OUT_ENABLE - Output Enable 17
3.1.4 Power Up Sequence 17
3.2 Clocks 18
3.2.1 Clock Distribution 18
3.2.2 Output Clock 18
3.3 Power Management 18
3.3.1 USB Power Management 19
3.4 Receiver Status 19
3.4.1 Clock Tolerance Compensation 20
3.4.2 Receiver Detection 20
3.4.3 8b/10b Decode Errors 20
3.4.4 Elastic Buffer Errors 21
3.4.5 Disparity Errors 21
3.5 Loopback 21
4 REGISTERS 22
4.1 Register Definitions 22
4.2 Register Map 22
4.2.1 Vendor ID and Product ID (00h-03h) 23
4.2.2 Function Control (04h-06h) 23
4.2.3 Interface Control (07h-09h) 24
4.2.4 OTG Control 24
4.2.5 USB Interrupt Enable Rising (0Dh-0Fh) 24
4.2.6 USB Interrupt Enable Falling (10h-12h) 25
4.2.7 USB Interrupt Status (13h) 25

Copyright © 2009–2011, Texas Instruments Incorporated

4.2.8 USB Interrupt Latch (14h) 25
4.2.9 Debug (15h) 25
4.2.10 Scratch Register (16-18h) 25
5 DESIGN GUIDELINES 26
5.1 Chip Connection on PCB 26
5.1.1 USB Connector Pins Connection 26
5.1.2 Clock Connections 27
5.2 Clock Source Requirements 28
5.2.1 Clock Source Selection Guide 28
5.2.2 Oscillator 29
5.2.3 Crystal 29
6 ELECTRICAL SPECIFICATIONS 30
6.1 ABSOLUTE MAXIMUM RATINGS 30
6.2 RECOMMENDED OPERATING CONDITIONS 30
6.3 DC CHARACTERISTICS FOR 1.8-V DIGITAL IO 30
6.4 DEVICE POWER CONSUMPTION 31
6.5 AC Characteristics 31
6.5.1 Power Up and Reset Timing 31
6.5.2 PIPE Transmit 32
6.5.3 PIPE Receive 32
6.5.4 ULPI Parameters 33
6.5.5 ULPI Clock 33
6.5.6 ULPI Transmit 33
6.5.7 ULPI Receive Timing 34
6.5.8 Power State Transition Time 34

Copyright © 2009–2011, Texas Instruments Incorporated

List of Figures

1-1 Typical Application 8
1-2 Functional Block Diagram 9
3-1 Power Up Sequence 18
5-1 Analog Pin Connections 26
5-2 USB Standard-A Connector Pin Connection 27
5-3 USB Standard-B Connector Pin Connection 27
5-4 Typical Crystal Connections 28
6-1 Power Up and Reset Timing 31
6-2 PIPE Transmit Timing 32
6-3 PIPE Receive Timing 32
6-4 ULPI Transmit Timing 34
6-5 ULPI Receive Timing 34

Copyright © 2009–2011, Texas Instruments Incorporated

List of Tables

2-1 Configuration Pins 10
2-2 PIPE Signal Description 10
2-3 ULPI Signal Description 13
2-4 ULPI Synchronous and Low Power Mode Functions 13
2-5 Clock Signal Name Description 14
2-6 JTAG Signal Name Description 14
2-7 Reset and Output Control Signal Description 14
2-8 Strapping Options 14
2-9 USB Interface Signal Name Descriptions 15
2-10 Special Connect Signal Descriptions 15
2-11 Power/Ground Signal Descriptions 15
3-1 Pin States in Chip Reset 17
3-2 Power States 19
3-3 PIPE Control Pin Matrix 19
3-4 RX_STATUS - SKP 20
3-5 RX_STATUS - Receiver Detection 20
3-6 8b/10b Decode Errors 21
3-7 Elastic Buffer Errors 21
3-8 Disparity Errors 21
4-1 Register Definitions 22
4-2 Register Map 22
4-3 Vendor ID and Product ID 23
4-4 Function Control 23
4-5 Interface Control 24
4-6 OTG Control Register 24
4-7 USB Interrupt Enable Rising 24
4-8 USB Interrupt Enable Falling 25
4-9 USB Interrupt Status 25
4-10 USB Interrupt Latch 25
4-11 Debug 25
4-12 Scratch Register 25
5-1 Oscillator Specification 29
5-2 Oscillator Specification 29
6-1 Power Up and Reset Timing 32
6-2 PIPE Transmit Timing 32
6-3 PIPE Receive Timing 32
6-4 ULPI Parameters 33
6-5 ULPI Clock Parameters 33
6-6 ULPI Transmit Timing 34
6-7 ULPI Transmit Timing 34

Copyright © 2009–2011, Texas Instruments Incorporated

Copyright © 2009–2011, Texas Instruments Incorporated

USB 3.0 Transceiver

Check for Samples: TUSB1310

1 PRODUCT OVERVIEW

1.1 Features

- **Universal Serial Bus (USB)**
  - **Single Port 5.0-Gbps USB 3.0 Physical Layer Transceiver**
    - **One 5.0-Gbps SuperSpeed Conneciton**
    - **One 480-Mbps HS/FS/LS Connection**
  - **Fully Compliant with USB 3.0 Specification**
  - **Supports 3+ Meters USB 3.0 Cable Length**
  - **Fully Adaptive Equalizer to Optimize Receiver Sensitivity**
  - **PIPE to Link Layer Controller**
    - **Supports 16-Bit SDR Mode at 250 MHz**
    - **Compliant With PHY Interface for the USB Architectures (PIPE), Version 3.0**
  - **ULPI to Link Layer Controller**
    - **Supports 8-Bit SDR Mode at 60 MHz**
    - **Supports Synchronous Mode and Low Power Mode**
    - **Compliant with UTMI+ Low Pin Interface (ULPI) Specification, Revision 1.1**
- **General Features**
  - **IEEE 1149.1 JTAG Support**
  - **IEEE 1149.6 JTAG support for the SuperSpeed Port**
  - **Operates on a Single Reference Clock Selectable from 20, 25, 30 or 40 MHz**
  - **3.3-, 1.8-, and 1.1-V Supply Voltages**
  - **1.8-V PIPE and ULPI I/O**
  - **Available in Lead-Free 175-Ball 12- x 12-nF BGA Package (175ZAY)**

1.2 Target Applications

- **Surveillance Cameras**
- **Multimedia Handset**
- **Smartphone**
- **Digital Still Camera**
- **Portable Media Player**
- **Personal Navigation Device**
- **Audio Dock**
- **Video IP Phone**
- **Wireless IP Phone**
- **Software Defined Radio**

Please be aware that an important notice concerning availability, standard warranty, and use in critical applications of Texas Instruments semiconductor products and disclaimers thereto appears at the end of this data sheet.

PRODUCTION DATA information is current as of publication date. Products conform to specifications per the terms of the Texas Instruments standard warranty. Production processing does not necessarily include testing of all parameters.

Copyright © 2009–2011, Texas Instruments Incorporated

1.3 Introduction

The TUSB1310 is a single port, 5.0-Gbps USB 3.0 physical layer transceiver operating off of a single crystal or an external reference clock. The reference clock frequencies are selectable from 20, 25, 30, and 40 MHz. The TUSB1310 provides a clock to USB link layer controllers. The single reference clock allows the TUSB1310 to provide a cost effective USB 3.0 solution with few external components and a minimum implementation cost.

Link controller interfaces to the TUSB1310 are via a PIPE (SuperSpeed) and a ULPI (USB2.0) interface. The 16-bit PIPE operates with a 250-MHz interface clock. The ULPI supports 8-bit operations with a 60-MHz interface clock.

USB 3.0 reduces active power and idle power by improving power management. The PIPE interface controls the TUSB1310 low power states which minimizes power consumption.

SuperSpeed USB leverages existing USB software infrastructure by keeping the existing software interfaces and software drivers. In addition the SuperSpeed USB retains backward compatibility at the Type-A connector with USB2.0 based PCs and with USB2.0 cables.

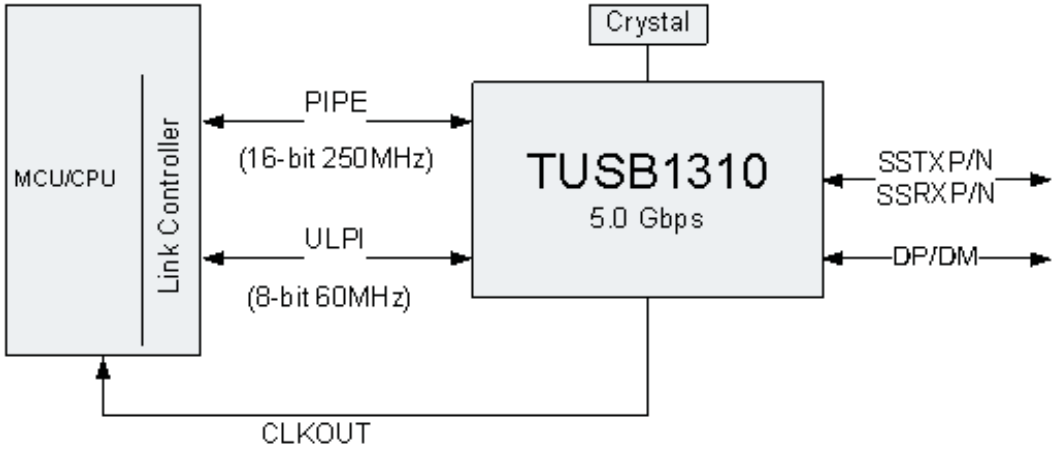

Figure 1-1. Typical Application

1.4 Functional Block Diagram

The USB physical layer handles the low level USB protocol and signaling. This includes data serialization and deserialization, 8b/10b encoding, analog buffers, elastic buffers and receiver detection. It shifts the clock domain of the data from the USB rate to one that is compatible with the link layer controller.

The SuperSpeed USB contains SSTXP/SSTXN and SSRXP/SSRXP differential pairs and uses the PIPE to communicate with the link layer controller. The Non-SuperSpeed USB has a DP/DM differential pair and communicates with the link layer controller via the ULPI. The TUSB1310 reference clock is connected to an internal crystal oscillator, spread spectrum clock and PLL which provides clocks to all blocks and to the CLKOUT pin for the link layer controller.

A JTAG interface is used for IEEE1149.1 and IEEE1149.6 boundary scan.

Copyright © 2009–2011, Texas Instruments Incorporated

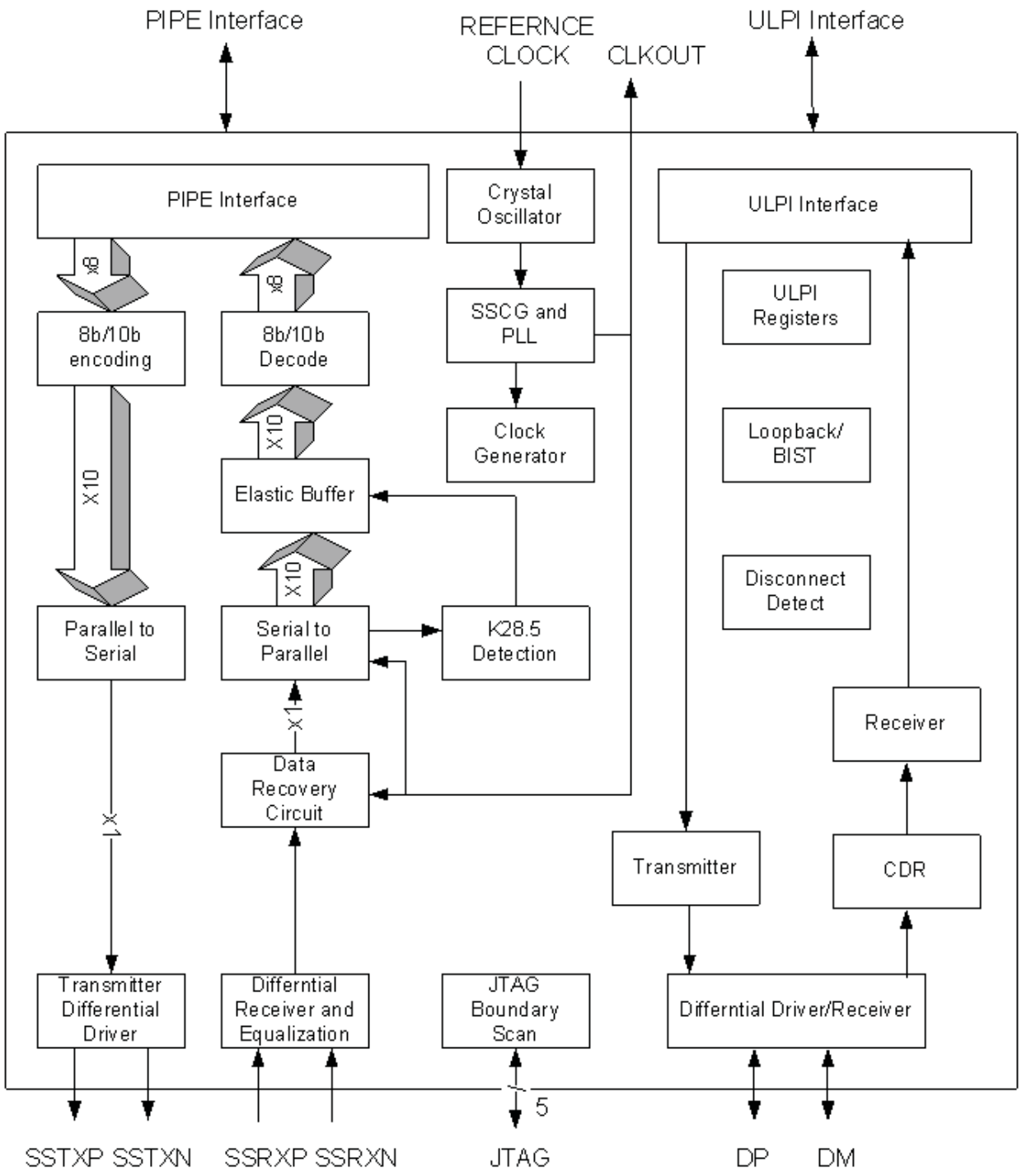

Figure 1-2. Functional Block Diagram

2 PIN DESCRIPTIONS

TYPE	DESCRIPTION
I	Input
O	Output
I/O	Input/output
PD, PU	Internal pull-down / pull-up
S	Strapping pin
P	Power Supply
G	Ground

2.1 Configuration Pins

The configuration pins are not latched by RESETN.

Table 2-1. Configuration Pins

SIGNAL NAME	TYPE	PIN NO.	MODE NAME	DESCRIPTION
PHY_MODE1	I, PD	H12	USB	Must be set to 0. Operates as USB 3.0 transceiver.
PHY_MODE0	I, PU	J12	USB	Must be set to 1. Operates as USB 3.0 transceiver.

2.2 PIPE

The TUSB1310 supports 16-bit SDR mode with a 250-MHz clock.

Table 2-2. PIPE Signal Description

SIGNAL NAME	TYPE	BALL NO.	DESCRIPTION
TX_CLK	I	K1	TX_DATA and TX_DATAK clock for source synchronous PIPE. This clock frequency is the same as PCLK frequency. The rising edge of the clock is the reference for all signals.
TX_DATA15	I	G2	Parallel USB SuperSpeed data input bus. The 16 bits represent 2 symbols of transmit data where TX_DATA7-0 is the first symbol to be transmitted, and TX_DATA15-8 is the second symbol.
TX_DATA14		H2	
TX_DATA13		H1	
TX_DATA12		J2	
TX_DATA11		L3	
TX_DATA10		L2	
TX_DATA9		M2	
TX_DATA8		M1	
TX_DATA7		N1	
TX_DATA6		P1	
TX_DATA5		N2	
TX_DATA4		P2	
TX_DATA3		N3	
TX_DATA2		P3	
TX_DATA1		N4	
TX_DATA0		P5	
TX_DATAK1	I	G1	Data/Control for the symbols of transmit data. TX_DATAK0 corresponds to the low-byte of TX_DATA, TX_DATAK1 to the upper byte.
TX_DATAK0		J1	
PCLK	O	A6	Parallel interface data clock. All data movement across the parallel PIPE is synchronous to this clock. This clock operates at 250 MHz. The rising edge of the clock is the reference for all signals.

Copyright © 2009–2011, Texas Instruments Incorporated

Table 2-2. PIPE Signal Description (continued)

SIGNAL NAME	TYPE	BALL NO.	DESCRIPTION
RX_DATA15 RX_DATA14 RX_DATA13 RX_DATA12 RX_DATA11 RX_DATA10 RX_DATA9 RX_DATA8 RX_DATA7 RX_DATA6 RX_DATA5 RX_DATA4 RX_DATA3 RX_DATA2 RX_DATA1 RX_DATA0	O	B9 A9 A8 B8 B5 B4 A4 B3 A3 A2 B1 C2 C1 D1 D2 E2	Parallel USB SuperSpeed data output bus. The 16 bits represent 2 symbols of receive data where RX_DATA7-0 is the first symbol received, and RX_DATA15-8 is the second.
RX_DATAK1 RX_DATAK0	O	B7 A7	Data/Control for the symbols of receive data. RX_DATAK0 corresponds to the low-byte of RX_DATA, RX_DATAK1 to the upper byte. A value of zero indicates a data byte; a value of 1 indicates a control byte.
RX_VALID	O	F1	Active High. Indicates symbol lock and valid data on RX_DATA and RX_DATAK.
CONTROL AND STATUS SIGNALS			
PHY_RESETN	I, PU	J3	Active Low. Resets the transmitter and receiver. This signal is asynchronous.
TX_DETRX_LPBK	I, PD	M6	Active High. Used to tell the PHY to begin a receiver detection operation or to begin loopback.
TX_ELECIDLE	I	K3	Active High. Forces TX output to electrical idle depending on the power state.
RX_ELECIDLE	S, I/O, PD	F3	Active High. While de-asserted with the PHY in P0, P1, P2, or P3, indicates detection of LFPS.
RX_STATUS2 RX_STATUS1 RX_STATUS0	O	C7 C6 C5	Encodes receiver status and error codes for the received data stream when receiving data.

BIT 2	BIT 1	BIT 0	DESCRIPTION
0	0	0	Received data OK
0	0	1	1 SKP ordered set added
0	1	0	1 SKP ordered set removed
0	1	1	Receiver detected
1	0	0	8B/10B decode error
1	0	1	Elastic buffer overflow
1	1	0	Elastic buffer underflow. This error code is not used if the elasticity buffer is operating in the nominal buffer empty mode.
1	1	1	Receive disparity error

POWER_DOWN1 POWER_DOWN0	I	G3 H3	Power up and down the transceiver power states.

BIT 1	BIT 0	DESCRIPTION
0	0	P0, normal operation
0	1	P1, low recovery time latency, power saving state
1	0	P2, longer recovery time latency, low power state
1	1	P3, lowest power state

When transitioning from P3 to P0, the signaling is asynchronous.

Table 2-2. PIPE Signal Description (continued)

SIGNAL NAME	TYPE	BALL NO.	DESCRIPTION
PHY_STATUS	S, I/O, PD	E3	Active High. Used to communicate completion of several PHY func-tions including power management state transitions, rate change, and receiver detection. When this signal transitions during entry and exit from P3 and PCLK is not running, then the signaling is asynchronous.
PWRPRESENT	O	H11	Indicates the presence of VBUS
CONFIGURATION PINS			
TX_ONESZEROS	I, PD	M4	Active High. Used only when transmitting USB compliance pat-terns CP7 or CP8. Causes the transmitter to transmit an alternating sequence of 50 - 250 ones and 50 - 250 zeros – regardless of the state of the TX_DATA interface.
TX_DEEMPH1 TX_DEEMPH0	I, PD, PU	K11 L11	Selects transmitter de-emphasis. When the MAC changes, the TUSB1310 starts to transmit with the new setting within 128 ns.

BIT 1	BIT 0	DESCRIPTION
0	0	-6 dB de-emphasis
0	1	-3.5 dB de-emphasis
1	0	No de-emphasis
1	1	Reserved

TX_MARGIN2 TX_MARGIN1 TX_MARGIN0	I, PD	M11 M10 M9	Selects transmitter voltage levels

BIT 2	BIT 1	BIT 0	TX_SWING	DESCRIPTION
0	0	0	0	Normal operating range 800 mV - 1200 mV
0	0	0	1	Normal operating range 400 mV - 700 mV
0	0	1	0	800 mV - 1200 mV
			1	400 mV - 700 mV
0	1	0	0	700 mV - 900 mV
			1	300 mV - 500 mV
0	1	1	0	400 mV - 600 mV
			1	200 mV - 400 mV
1	Don't care		0	200 mV - 400 mV
1			1	100 mV - 200 mV

TX_SWING	I, PD	M5	Controls transmitter voltage swing level 0 Full swing 1 Half swing
RX_POLARITY	I, PD	C8	Active High. Tells PHY to do a polarity inversion on the received data. Inverted data show up on RX_DATA15-0 within 20 PCLK clocks after RX_POLARITY is asserted. 0 PHY does no polarity inversion. 1 PHY does polarity inversion.
RX_TERMINATION	I, PD	D3	Controls presence of receiver terminations 0 Terminations removed 1 Terminations present
RATE	I, PU	L6	Controls the link signaling rate The RATE is always 1.
ELAS_BUF_MODE	I, PD	C9	Selects elasticity buffer operating mode 0 Nominal half full buffer mode 1 Nominal empty buffer mode

Copyright © 2009–2011, Texas Instruments Incorporated

2.3 ULPI

The ULPI (ultra low pin count interface) is a low pin count USB PHY to a link layer controller interface. The ULPI consists of the interface and the ULPI registers. The TUSB1310 is always the master of the ULPI bus.

Table 2-3. ULPI Signal Description

SIGNAL NAME	TYPE	BALL NO.	DESCRIPTION
ULPI_CLK	O	P11	60-MHz interface clock. All ULPI signals are synchronous to ULPI_CLK. The ULPI_CLK is always a 60-MHz output of the TUSB1310. In low power mode, the ULPI_CLK is not driven.
ULPI_DATA7 ULPI_DATA6 ULPI_DATA5 ULPI_DATA4 ULPI_DATA3 ULPI_DATA2 ULPI_DATA1 ULPI_DATA0	S, I/O, PD	N6 P6 N7 P7 N8 P8 P9 N9	Data bus. Driven to 00h by the Link when the ULPI bus is idle. 8-bit data timed on rising edge of ULPI_CLK
ULPI_DIR	O	M7	Controls the direction of the ULPI_DATA bus 0 ULPI_DATA lines are inputs 1 ULPI_DATA lines are outputs
ULPI_STP	S, I, PU	M8	Active High. The Link must assert ULPI_STP to signal the end of a USB transmit packet or a register write operation. The ULPI_STP signal must be asserted in the cycle after the last data byte is presented on the bus. The ULPI_STP has an internal weak pull-up to safeguard against false commands on the ULPI_DATA lines.
ULPI_NXT	O	N11	Active High. The PHY asserts ULPI_NXT to throttle all data types, except register read data and the RX CMD. The PHY also asserts ULPI_NXT and ULPI_DIR simultaneously to indicate USB receive activity, if ULPI_DIR was previously low. The PHY is not allowed to assert ULPI_NXT during the first cycle of the TX CMD driven by the Link.

2.3.1 ULPI Modes

The TUSB1310 supports synchronous mode and low power mode. The default mode is synchronous mode.

The synchronous mode is a normal operation mode. The ULPI_DATA are synchronous to ULPI_CLK. The low power mode is used during power down and no ULPI_CLK. The TUSB1310 sets ULPI_DIR to output and drives LineState signals and interrupts.

Table 2-4. ULPI Synchronous and Low Power Mode Functions

SYNCHRONOUS	LOW POWER
ULPI_CLK(OUT)	
ULPI_DATA7(I/O)	
ULPI_DATA6(I/O)	
ULPI_DATA5(I/O)	
ULPI_DATA4{I/O}	
ULPI_DATA3(I/O)	ULPI_INT (OUT)
ULPI_DATA2(I/O)	
ULPI_DATA1(I/O)	ULPI_LINESTATE1(OUT)
ULPI_DATA0(I/O)	ULPI_LINE_STATE0 (OUT)
ULPI_DIR(OUT)	
ULPI_STP(IN)	
ULPI_NXT(OUT)	

Copyright © 2009–2011, Texas Instruments Incorporated

2.4 Clocking

Table 2-5. Clock Signal Name Description

SIGNAL NAME	TYPE	BALL NO.	DESCRIPTION
XI	I	A12	Crystal Input. This pin is the clock reference input for the TUSB1310. The TUSB1310 supports either a crystal unit, or a 1.8-V clock input. Frequencies supported are 20, 25, 30, or 40 MHz.
XO	O	A11	Crystal output. If a 1.8-V clock input is connected to XI, XO must be left open.
CLKOUT	O	D10	OOBCLK is driven in U3 mode.

2.5 JTAG Interface

The JTAG Interface is used for board-level boundary scan. All digital IO support IEEE1149.1 boundary scan and SuperSpeed differential pairs support IEEE1149.6 boundary scan.

Table 2-6. JTAG Signal Name Description

SIGNAL NAME	TYPE	BALL NO.	DESCRIPTION
JTAG_TCK	I, PU	G11	JTAG test clock
JTAG_TMS	I, PU	D11	JTAG test mode select
JTAG_TDI	I, PU	E11	JTAG test data input
JTAG_TRSTN	I, PD	E12	JTAG test asynchronous reset. Active Low.
JTAG_TDO	O	F11	JTAG test data output

2.6 Reset and Output Control Interface

Table 2-7. Reset and Output Control Signal Description

SIGNAL NAME	TYPE	BALL NO.	DESCRIPTION
RESETN	I	J11	Active Low. Resets the transmitter and receiver. This signal is asynchronous.
OUT_ENABLE	I	L10	Active High. This can be connected to a 1.8-V power on reset signal on the PCB in order to avoid static current and signal contention during power up. 0: Disable all driver outputs while IO powers are supplied, but internal control circuit powers are not present during power up. 1: Enable all driver outputs during normal operation.

2.7 Strap Options

Strapping pins are latched by reset de-assertion in the TUSB1310.

Table 2-8. Strapping Options

SIGNAL NAME	TYPE	BALL NO.	DESCRIPTION
XTAL_DIS (RX_ELECIDLE)	S, I/O, PD	F3	Selects an input clock source 0 Crystal Input 1 Clock Input
PIPE_16BIT (PHY_STATUS)	S, I/O, PD	E3	Selects PIPE 0 16-bit PIPE SDR mode Must be 0 at reset.
ISO_START (ULPI_DATA7)	S, I/O, PD	N6	Active High. Puts PIPE into isolate mode. When in the isolate mode, TUSB1310 does not respond to packet data present at TX_DATA15-0, TXDATAK1-0 inputs and presents a high imped-ance on the PCLK, RX_DATA15-0, RX_DATAK1-0, RX_VALID outputs. When in the isolate mode, the TUSB1310 will continue to respond to ULPI. Once the isolate mode bit in ULPI register is cleared, the USB interfaces will start transmitting packet data on TX_DATA15-0 and driving PCLK, RX_DATA15-0, RX_DATA1-0, and RX_VALID.

Copyright © 2009–2011, Texas Instruments Incorporated

Table 2-8. Strapping Options (continued)

SIGNAL NAME	TYPE	BALL NO.	DESCRIPTION
ULPI_8BIT (ULPI_DATA6)	S, I/O, PD	P6	Selects ULPI data bus bit width 0 8-bit ULPI SDR mode Must be set to 0.
REFCLKSEL1, REFCLKSEL0 (ULPI_DATA5, ULPI_DATA4)	S, I/O, PD	N7 P7	Select input reference clock frequency for on-chip oscillator 00 20 MHz on XI 01 25 MHz on XI 10 30 MHz on XI 11 40 MHz on XI

2.8 USB Interfaces

Table 2-9. USB Interface Signal Name Descriptions

SIGNAL NAME	TYPE	BALL NO.	DESCRIPTION
SSTXP SSTXM	O	H14 J14	USB SuperSpeed transmitter differential pair
SSRXP SSRXM	I	E14 F14	USB SuperSpeed receiver differential pair
DP DM	I/O	P14 P13	USB non-SuperSpeed differential pair
VBUS	I	N12	USB VBUS pin Connected through an external voltage divider.

2.9 Special Connect

Table 2-10. Special Connect Signal Descriptions

SIGNAL NAME	TYPE	BALL NO.	DESCRIPTION
R1EXT	O	L14	High precision external resistor used for calibration. The R1 value shall be 10 kΩ ±1% accuracy.
R1EXTRTN	I	L13	R1 ground reference. This pin is not connected to board ground.
CEXT	O	M14	Connected to an external 4.7-nF capacitor
CEXTSS	O	A14	Connected to an external 4.7-nF capacitor
RSVD	I/O	D6 D5 C13 C14 K4 J4	Must be left open.

2.10 Power and Ground

Table 2-11. Power/Ground Signal Descriptions

SIGNAL NAME	TYPE	BALL NO.	DESCRIPTION
VDDA3P3	P	P12	Analog 3.3-V power supply
VDDA1P8	P	N14 A13 C10	Analog 1.8-V power supply

Copyright © 2009–2011, Texas Instruments Incorporated

Table 2-11. Power/Ground Signal Descriptions (continued)

SIGNAL NAME	TYPE	BALL NO.	DESCRIPTION
VDDA1P1	P	C12 K14 G13 G14 D14 C11	Analog 1.1-V power supply
VDD1P8	P	B2 C3 D4 D7 D8 D9 E4 F4 G4 H4 L5 L4 M3 L7 L8 L9	Digital IO 1.8-V power supply
VDD1P1	P	A5 A10 B6 B10 E1 F2 K2 L1 N5 P4 N10 P10 K13 D13 C4	Digital 1.1-V power supply
VSSA	G	B14 B13 J13 H13 F13 E13 K12 L12 G12 D12 N13 M12 M13	Analog ground
VSSOSC	G	B12	Oscillator ground If using a crystal, this should not be connected to PCB ground plane. See Chapter 5 for guidelines. If using an oscillator, this should be connected to PCB ground.
VSS	G	F6 F7 F8 F9 G6 G7 G8 G9 J6 J7 H6 H7 H8 H9 J8 J9 B11 F12	Digital ground

Copyright © 2009–2011, Texas Instruments Incorporated

3 FUNCTIONAL DESCRIPTION

3.1 Power On and Reset

The TUSB1310 has two hardware reset pins, a chip reset RESETN and a logic reset PHY_RESETN. The RESETN is used only at Power On. The PHY_RESETN can be used as a functional reset. The ULPI register also has a software reset.

Until all power sources are supplied, the OUT_ENABLE pin can control the output driver enable. After all power sources are supplied, the chip reset RESETN and a ULPI soft reset will be asserted by the link layer. The power up sequence is described in section 3.1.4.

3.1.1 RESETN and PHY_RESETN – Hardware Reset

The RESETN sets all internal states to initial values. The link layer needs to hold the PHY in reset via the RESETN until all power sources and the reference clock to the TUSB1310 are stable. All pins used for strapping options must be set before RESETN de-assertion. All strapping option pins have internal pull-up or pull-down to set default values, but if any non-default values are desired, they need to be controlled externally by the link layer controller.

Table 3-1. Pin States in Chip Reset

PIPE CONTROL PIN NAME	STATE	VALUE
TX_DETRX_LPBK	Inactive	0
TX_ELECIDLE	Active	1
TX_COMPLIANCE	Inactive	0
RX_POLARITY	Inactive	0
POWER_DOWN	U2	10b
TX_MARGIN2-0	Normal operating range	000b
TX_DEEMP	-3.5 dB	1
RATE	5.0 Gbps	1
TX_SWING	Full swing or half swing	0 or 1
RX_TERMINATION	Appropriate state	0 or 1

3.1.2 ULPI Reset – Software Reset

After power-up, the link layer controller must set the Reset bit in ULPI register. It resets the core but does not reset the ULPI interface or the ULPI registers.

During the ULPI reset, the ULPI_DIR is de-asserted. After the reset, the ULPI_DIR is asserted again and the TUSB1310 sends an RX CMD update to the link layer. During the reset, the link should ignore signals on the ULPI_DATA7-0 and must not access the TUSB1310.

3.1.3 OUT_ENABLE - Output Enable

Digital IO buffers use two power supplies, core VDD1P1 and IO VDD1P8. During power up, OUT_ENABLE must be asserted low for proper operation.

3.1.4 Power Up Sequence

The power up sequence is shown in Figure 3-1.

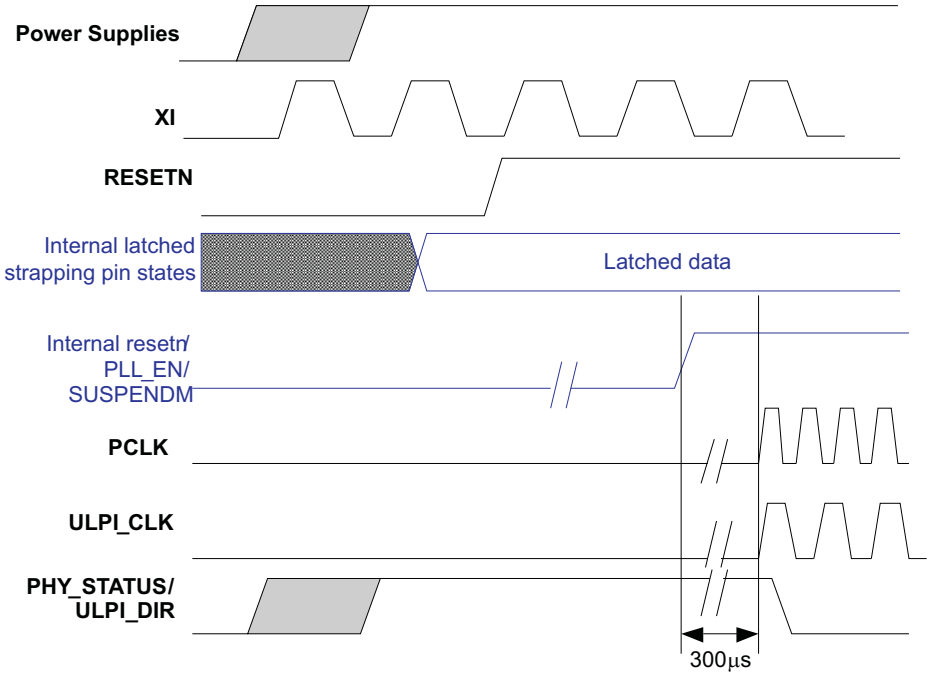

Figure 3-1. Power Up Sequence

After proper power supply sequencing, the reference clock on XI starts to operate. On the RESETN de-assertion, REFCLKSEL1-0 is determined depending on the PHY_MODE pins, PLL is locked and the valid ULPI_CLK and the valid PCLK are driven.

After all stable clocks are provided, the TUSB1310 allows the link layer controller to access by de-asserting the ULPI_DIR. The link layer controller sets the Reset bit in the ULPI register. At the PIPE in-terface, the PHY_STATUS changes from high to low in order to indicate the TUSB1310 is in the power state specified by the POWER_DOWN signal. After the PHY_STATUS change, the TUSB1310 is ready for PIPE transactions.

3.2 Clocks

3.2.1 Clock Distribution

A source clock should be provided via XI/XO from an external crystal or from a square wave clock. The USB3.0 PLL provides a clock to the PIPE which drives 250 MHz. The USB2.0 PLL provides a 60-MHz clock to the ULPI.

3.2.2 Output Clock

The CLKOUT is used by the link layer controller or the MAC. When ClkoutEn bit at the ULPI SS USB register is set low, a 120-MHz clock is available via the CLKOUT only in the USB U3 power state. If the ClkoutEn bit is set high, the 250-MHz clock is driven via CLKOUT in all power states.

3.3 Power Management

The SuperSpeed USB power state transition is controlled by the PIPE POWER_DOWN1-0 and the non-SuperSpeed USB power state is transitioned by setting suspendM bit in the ULPI Function control register via the ULPI or by asserting the ULPI_STP.

Copyright © 2009–2011, Texas Instruments Incorporated

3.3.1 USB Power Management

The USB 3.0 specification improves power consumption by defining 4 power states, U0, U1, U2, and U3 while the PIPE specification defines P0, P1, P2 and P3. The POWER_DOWN pin states are mapped to LTSSM states as described in Table 2-10. For all power state transitions, the link layer controller must not begin any operational sequences or further power state transitions until the TUSB1310 has indicated that the internal state transition is completed.

Table 3-2. Power States

PIPE POWER STATE	USB POWER STATE	PCLK	PLL	TRANSMITTING	RECEIVING	PHY_STATUS
P0	U0, all other LTSSM states	On	On	Active or Idle or LFPS	Active or Idle	A single cycle assertion
P1	U1	On	On	Idle or LFPS	Idle	A single cycle assertion
P2	U2, RxDetect, SS.Inactive	On	On	Idle or LFPS or RxDetect	Idle	A single cycle assertion
P3	U3, SS.disabled	Off. The PIPE is in an asynchronous mode	Off	LFPS or RxDetect	Idle	PHY_STATUS is asserted before PCLK is turned off and deasserted when PCLK is fully off.

When the link layer controller wants to transmit LFPS in P1, P2, or P3 state, it must de-assert TX_ELECIDLE. The TUSB1310 generates valid LFPS until the TX_ELECIDLE is asserted. The link layer controller must assert TX_ELECIDLE before transitioning to P0.

When RX_ELECIDLE is de-asserted in P0, P1, P2, or P3, the TUSB1310 receiver monitors for LFPS except during reset or when RX_TERMINATION is removed for electrical idle.

When the TUSB1310 is in P0 and is actively transmitting; only RX_POLARITY can be asserted.

Table 3-3. PIPE Control Pin Matrix

POWER STATE	TX_DETRX_LPBK	TX_ELECIDLE	DESCRIPTION
P0	0	0	Transmitting data on TX_DATA
	0	1	Not transmitting and is in electrical idle.
	1	0	Goes into loopback mode
	1	1	Transmits LFPS signaling
P1	Don't care	0	Transmits LFPS signaling
		1	Not transmitting and is in electrical idle.
P2	Don't care	0	Transmits LFPS signaling
	0	1	Idle
	1	1	Does a receiver detection operation
P3	Don't care	0	Transmits LFPS signaling
		1	Does a receiver detection operation

3.4 Receiver Status

The TUSB1310 has an elastic buffer for clock tolerance compensation, the link partner detection, and some received data error detections. The receive data status from SSRXP/SSRXN differential pair presents on RX_STATUS2-0. If an error occurs during a SKP ordered set, the error signaling has precedence. If more than one error occurs on a received byte, the errors have the priority below.

1. 8B/10B decode error
2. Elastic buffer overflow

3. Elastic buffer underflow (can not occur in nominal empty buffer model)
4. Disparity error

3.4.1 Clock Tolerance Compensation

The receiver contains an elastic buffer used to compensate for differences in frequencies between bit rates at the two ends of a link. The elastic buffer must be capable of holding enough symbols to handle worst case differences in frequency and worst case intervals between SKP ordered sets. A SKP order set is a set of symbols transmitted as a group. The SKP ordered sets allows the receiver to adjust the data stream being received to prevent the elastic buffer from either overflowing or under-flowing due to any clock tolerance differences.

The TUSB1310 supports two models, nominal half full buffer model and nominal empty buffer mode. For the nominal half full buffer model, the TUSB1310 monitors the receive data stream. When a Skip ordered set is received, the TUSB1310 adds or removes one SKP order set from each SKP to manage its elastic buffer to keep the buffer as close to half full as possible. Only full SKP ordered sets are added or removed. When a SKP order set is added, the TUSB1310 asserts an “Add SKP” code (001b) on the RX_STATUS for one clock cycle. When a SKP order set is removed, the RX_STATUS is has a “Remove SHP” code (010b).

For the nominal empty buffer model the TUSB1310 attempts to keep the elasticity buffer as close to empty as possible. When no SKP ordered sets have been received, the TUSB1310 will be required to insert SKP ordered sets into the received data stream.

Table 3-4. RX_STATUS - SKP

RX_STATUS2-0	SKP ADDITION or REMOVAL	LENGTH
001b	1 SKP ordered set added	One clock cycle
010b	1 SKP ordered set removed	

3.4.2 Receiver Detection

TX_DETRX_LPBK starts a receiver detection operation to determine if there is a receiver at the other end of the link. When the receiver detect sequence completes, the PHY_STATUS is asserted for one clock and drives the RX_STATUS signals to the appropriate code. Once the TX_DETRX_LPBK signal is asserted, the link layer controller must leave the signal asserted until the PHY_STATUS pulse. When receiver detection is performed in P3, the PHY_STATUS shows the appropriate receiver detect value until the TX_DETRX_LPBK is de-asserted.

Table 3-5. RX_STATUS - Receiver Detection

RX_STATUS2-0	DETECTED CONDITION	LENGTH
000b	Receiver not present	One clock cycle
011b	Receiver present	

3.4.3 8b/10b Decode Errors

When the TUSB1310 detects an 8b/10b decode error, it will assert an EDB (0xFE) symbol in the data on the RX_DATA where the bad byte occurred. In the same clock cycle that the EDB symbol is asserted on the RX_DATA, the 8b/10b decode error code (100b) will be asserted on the RX_STATUS. 8b/10b decoding error has priority over all other receiver error codes and could mask out a disparity error occurring on the other byte of data being clocked onto the RX_DATA with the EDB symbol.

Copyright © 2009–2011, Texas Instruments Incorporated

Table 3-6. 8b/10b Decode Errors

RX_STATUS2-0	DETECTED ERROR	LENGTH
100b	8B/10B decode error	Clock cycles during the effected byte is transferred on RX_DATA15-0

3.4.4 Elastic Buffer Errors

When the elastic buffer overflows, data is lost during the reception of the data. The elastic buffer overflow error code (101b) will be asserted on the RX_STATUS on the PCLK cycle the omitted data would have been asserted. The data asserted on the RX_DATA is still valid data, the elastic buffer overflow error code on the RX_STATUS just marks a discontinuity point in the data stream being received.

When the elastic buffer underflows, EDB (0xFE) symbols are inserted into the data stream on the RX_DATA to fill the holes created by the gaps between valid data. For every PCLK cycle a EDB symbol is asserted on the RX_DATA, an elastic buffer underflow error code (111b) is asserted on the RX_STATUS. In nominal empty buffer mode, SKP ordered sets are transferred on RX_DATA and the underflow is not signaled.

Table 3-7. Elastic Buffer Errors

RX_STATUS2-0	DETECTED ERROR	LENGTH
101b	Elastic buffer overflow	Clock cycles the omitted data would have appeared
110b	Elastic buffer underflow	Clock cycles during the EDB symbol presence on RX_DATA15-0

3.4.5 Disparity Errors

When the TUSB1310 detects a disparity error, it will assert a disparity error code (111b) on the RX_STATUS in the same PCLK cycle it asserts the erroneous data on the RX_DATA. The disparity code does not discern which byte on the RX_DATA is the erroneous data.

Table 3-8. Disparity Errors

RX_STATUS2-0	DETECTED ERROR	LENGTH
111b	Disparity error	Clock cycles during the ef-fected byte is transferred on RX_DATA15-0

3.5 Loopback

The TUSB1310 begins an internal loopback operation from SSRXP/SSRXN differential pairs to SSTXP/SSTXN differential pairs when the TX_DETRX_LPBK is asserted while holding TX_ELECIDLE de-asserted. The TUSB1310 will stop transmitting data to the SSTXP/SSTXN signaling pair from the TX_DATA and begin transmitting on the SSTXP/SSTXN signaling pair the data received at the SSRXP/SSRXN signaling pair. This data is not routed through the 8b/10b coding/encoding paths. While in the loopback operation, the received data is still sent to the RX_DATA. The data sent to the RX_DATA is routed through the 10b/8b decoder.

The TX_DETRX_LPBK de-assertion will terminate the loopback operation and return to transmitting TX_DATA over the SSTXP/SSTXN signaling pair. The TUSB1310 only transitions out of loopback on detection of LFPS signaling by transitioning to P2 state and starting the LFPS handshake.

Copyright © 2009–2011, Texas Instruments Incorporated

4 REGISTERS

4.1 Register Definitions

Table 4-1. Register Definitions

ACCESS CODE	EXPANDED NAME	DESCRIPTION
Rd	Read	Register can be read. Read only if this is the only mode given.
Wr	Write	Pattern on the data bus will be written over all bits of the register.
S	Set	Pattern on the data bus is OR'ed with and written into the register.
C	Clear	Pattern on the data bus is a mask. If a bit in the mask is set, then the corresponding register bit will be set to zero(cleared).

4.2 Register Map

The TUSB1310 contains the ULPI registers consisting of an immediate register set and an extended register set.

Table 4-2. Register Map

REGISTER NAME	ADDRESS (6 BITS)			
	Rd	Wr	Set	Clr
IMMEDIATE REGISTER SET				
Vendor ID low	00h			
Vendor ID high	01h			
Product ID low	02h			
Product ID high	03h			
Function control	04h-06h	04h	05h	06h
Interface control	07h-09h	07h	08h	09h
OTG Control	0Ah-0Ch	0Ah	0Bh	0Ch
USB Interrupt Enable Rising	0Dh-0Fh	0Dh	0Eh	0Fh
USB Interrupt Enable Falling	10h-12h	10h	11h	12h
USB Interrupt Status	13h	13h		
USB Interrupt Latch	14h	14h		
Debug	15h			
Scratch register	16h-18h	16h	17h	18h
Reserved	19h-2Eh			

Copyright © 2009–2011, Texas Instruments Incorporated

4.2.1 Vendor ID and Product ID (00h-03h)

Table 4-3. Vendor ID and Product ID

ADDRESS	BITS	NAME	ACCESS	RESET	DESCRIPTION
00h	7:00	Vendor ID low	Rd	51h	Lower byte of vendor ID supplied by USB-IF
01h	7:00	Vendor ID high	Rd	04h	Upper byte of vendor ID supplied by USB-IF
02h	7:00	Product ID low	Rd	10h	Lower byte of vendor ID supplied by vendor
03h	7:00	Product ID high	Rd	13h	Upper byte of vendor ID supplied by vendor

4.2.2 Function Control (04h-06h)

Address: 04h-06h (Read), 04h (Write), 05h (Set), 06h (Clear)

Table 4-4. Function Control

BITS	NAME	ACCESS	RESET	DESCRIPTION
1:00	XcvrSelect	Rd/Wr/S/C	1h	Selects the required transceiver speed 00b : Enable HS transceiver 01b: Enable FS transceiver 10b: Enable LS transceiver 11b: Enable FS transceiver for LS packets (FS preamble is automatically pre-pended)
2	TermSelect	Rd/Wr/S/C	0	Controls the internal 1.5-kΩ pullup resister and 45-Ω HS terminations. Control over bus resistors changes depending on XcvrSelect, OpMode, DpPulldown and DmPulldown. Since low speed peripherals never support full speed or hi-speed, providing the 1.5 kΩ on DM for low speed is optional.
4:03	OpMode	Rd/Wr/S/C	0	Selects the required bit encoding style during transmit 00 : Normal operation 01: Non-driving 10: Disable bit-stuff and NRZI encoding 11: Do not automatically add SYNC and EOP when transmitting. Must be used only for HS packets.
5	Reset	Rd/Wr/S/C	0	Active High transceiver reset. After the Link sets this bit, the TUSB1310 must assert the ULPI_DIR and reset the ULPI. When the reset is completed, the PHY de-asserts the ULPI_DIR and automatically clears this bit. After de-asserting the ULPI_DIR, the PHY must re-assert the ULPI_DIR and send an RX CMD update on the link layer controller. The link layer controller must wait for the ULPI_DIR to de-assert before using the ULPI bus. Does not reset the ULPI or ULPI register set.
6	SuspendM	Rd/Wr/S/C	1h	Active low PHY suspend. Put the TUSB1310 into low power mode. The PHY can power down all blocks except the full speed receiver, OTG comparators, and the ULPI pins. The PHY must automatically set this bit to '1' when low power mode is exited. 0: Low power mode 1: Powered
7	Reserved	Rd	0	Reserved

Copyright © 2009–2011, Texas Instruments Incorporated

4.2.3 Interface Control (07h-09h)

Address: 07-09h (Read), 07h (Write), 08h (Set), 09h (Clear)

Table 4-5. Interface Control

BITS	NAME	ACCESS	RESET	DESCRIPTION
0	Reserved	Rd	0b	Reserved, only write a 0 to this bit.
1	Reserved	Rd	0b	Reserved, only write a 0 to this bit.
2	Reserved	Rd	0h	Reserved
3	ClockSuspendM	Rd/Wr/S/C	0b	Active low clock suspend. Valid only in serial mode. Powers down the internal clock circuitry only. Valid only when SuspendM = 1. The TUSB1310 must ignore ClockSuspend when SuspendM = 0. By default, the clock will not be powered in serial mode. 0 : Clock will not be powered in serial mode 1 : Clock will be powered in serial mode
6:04	Reserved	Rd	0h	Reserved
7	Interface protect disable	Rd/Wr/S/C	0	Controls internal pullups and pulldowns on the ULPI_STP and the ULPI_DATA for protecting the ULPI when the link layer controller tri-states the signals. 0 enables the pullup and pulldown 1 disables the pullup and pulldown

4.2.4 OTG Control

Address: 0Ah-0Ch (Read), 0Ah (Write), 0Bh (Set), 0Ch (Clear). Controls UTMI+ OTG functions of the PHY.

Table 4-6. OTG Control Register

BITS	NAME	ACCESS	RESET	DESCRIPTION
0	Reserved	Rd	0b	This bit is not implemented and returns a 0b when read.
1	DpPulldown	Rd/Wr/S/C	1b	Enables the 15-kΩ pull-down resistor on D+. 0 Pull-down resistor not connected to D+ 1 Pull-down resistor connected to D+
2	DmPulldown	Rd/Wr/S/C	1h	Enables the 15-kΩ pull-down resistor on D-. 0 Pull-down resistor not connected to D- 1 Pull-down resistor connected to D-
7:3	Reserved	Rd	0h	These bits are not implemented and return zeros when read.

4.2.5 USB Interrupt Enable Rising (0Dh-0Fh)

Address: 0D-0Fh (Read), 0Dh (Write), 0Eh (Set), 0Fh (Clear)

Table 4-7. USB Interrupt Enable Rising

BITS	NAME	ACCESS	RESET	DESCRIPTION
0	Hostdisconnect Rise	Rd/Wr/S/C	1b	Generate an interrupt event notification when Hostdisconnect changes from low to high Applicable only in host mode (DpPulldown and DmPulldown both set to 1b).

Copyright © 2009–2011, Texas Instruments Incorporated

4.2.6 USB Interrupt Enable Falling (10h-12h)

Address: 10-12h (Read), 10h (Write), 11h (Set), 12h (Clear)

Table 4-8. USB Interrupt Enable Falling

BITS	NAME	ACCESS	RESET	DESCRIPTION
0	Hostdisconnect Fall	Rd/Wr/S/C	1b	Generate an interrupt event notification when Host-disconnect changes from high to low. Applicable only in host.

4.2.7 USB Interrupt Status (13h)

Address: 13h (Read-only)

Table 4-9. USB Interrupt Status

BITS	NAME	ACCESS	RESET	DESCRIPTION
0	Hostdisconnect Fall	Rd/Wr/S/C	1b	Generate an interrupt event notification when Host-disconnect changes from high to low. Applicable only in host.

4.2.8 USB Interrupt Latch (14h)

Address: 14h (Read-only with auto-clear)

Table 4-10. USB Interrupt Latch

BITS	NAME	ACCESS	RESET	DESCRIPTION
0	Hostdisconnect Fall	Rd/Wr/S/C	1b	Set to 1b by the PHY when an unmasked event occurs on Hostdisconnect. Cleared when this register is read. Applicable only in host mode.

4.2.9 Debug (15h)

Address: 15h (Read-only)

Table 4-11. Debug

BITS	NAME	ACCESS	RESET	DESCRIPTION
0	LineState0	Rd	0	Contains the current value of LineState0
1	LineState1	Rd	0	Contains the current value of LineState0
07:2	Reserved	Rd	0	Reserved

4.2.10 Scratch Register (16-18h)

Address: 16-18h (Read), 16h (Write), 17h (Set), 18h (Clear)

Table 4-12. Scratch Register

BITS	NAME	ACCESS	RESET	DESCRIPTION
7:0	Scratch	Rd/Wr/S/C	00	Empty register byte for testing purposes. Software can read, write, set, and clear this register and the TUSB1310 functionality will not be affected.

Copyright © 2009–2011, Texas Instruments Incorporated

5 DESIGN GUIDELINES

5.1 Chip Connection on PCB

Components should be placed close to the TUSB1310 to reduce the trace length of the interface between the components and the TUSB1310. If external capacitors can not accommodate a close placement, shielding to ground is recommended.

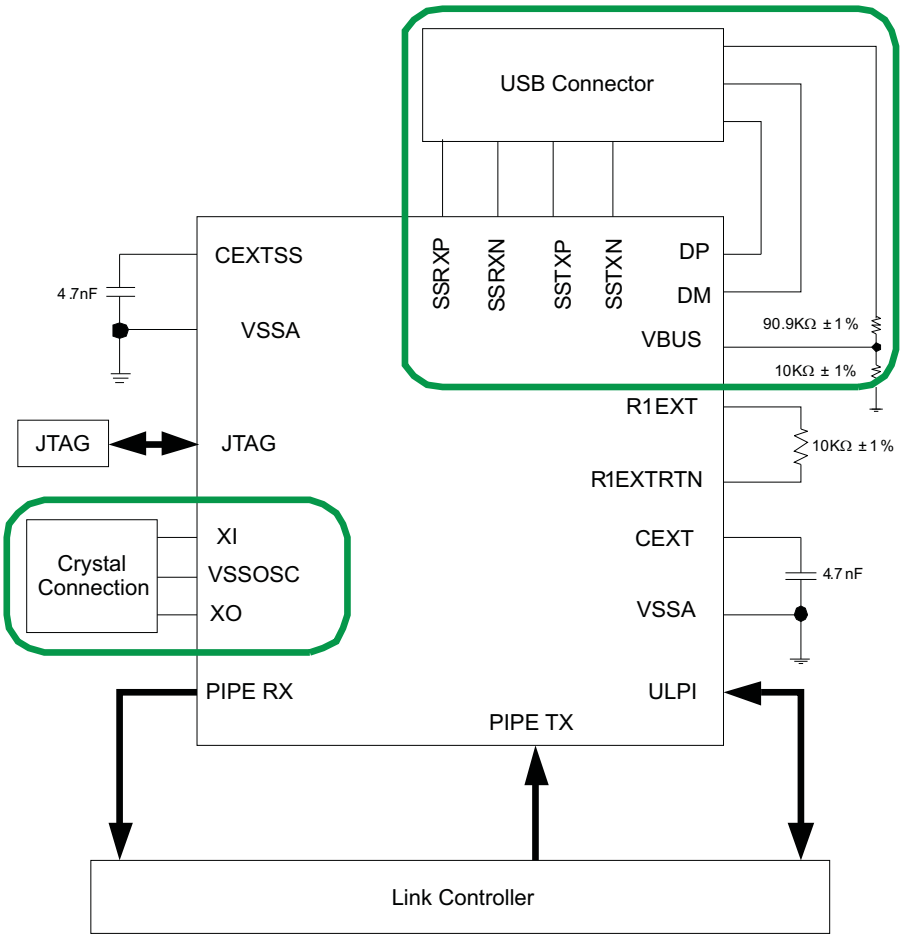

Figure 5-1. Analog Pin Connections

5.1.1 USB Connector Pins Connection

Differential pair signals, DP/DM, SSTXP/SSTXN, SSRXP/SSRXN, should be kept as short as possible. The differential pair traces should be trace-length matched and parallelism should be maintained. They also need to minimize vias and corners and should avoid crossing plane splits and stubs.

Figure 5-2 and Figure 5-3 are for visual reference only.

Copyright © 2009–2011, Texas Instruments Incorporated

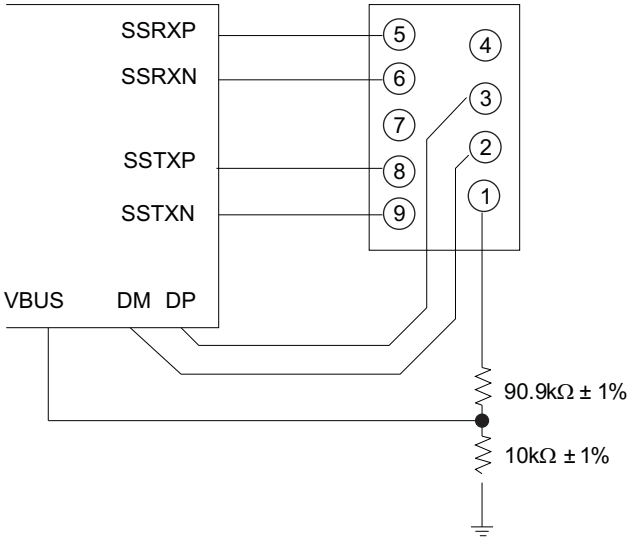

Pin#	Signal Name
1	VBUS
2	DM
3	DP
4	GND
5	SSRXN
6	SSRXP
7	GND_DRAIN
8	SSTXN
9	SSTXP

Figure 5-2. USB Standard-A Connector Pin Connection

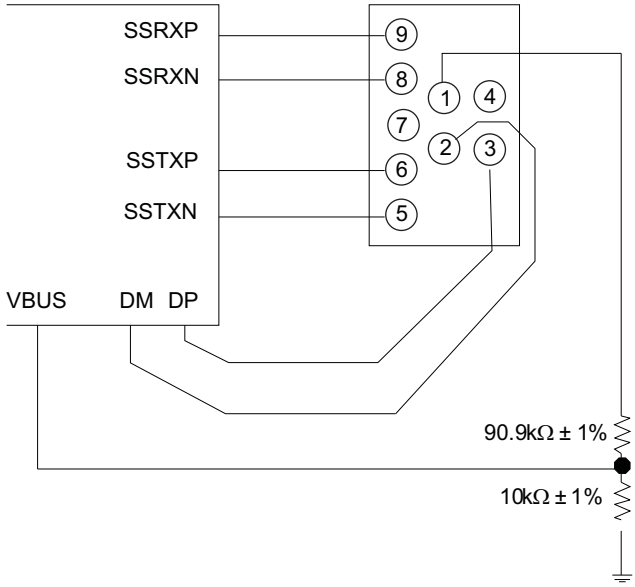

Pin#	Signal Name
1	VBUS
2	DM
3	DP
4	GND
5	SSTXN
6	SSTXP
7	GND_DRAIN
8	SSRXN
9	SSRXP

Figure 5-3. USB Standard-B Connector Pin Connection

5.1.2 Clock Connections

The TUSB1310 supports an external oscillator source or a crystal unit. If a clock is provided to XI instead of a crystal, XO is left open. Otherwise, if a crystal is used, the connection needs to follow the guidelines below.

Since XI and XO are coupled to other leads and supplies on the PCB, it is important to keep them as short as possible and away from any switching leads. It is also recommended to minimize the capacitance between XI and XO. This can be accomplished by connecting the VSSOSC lead to the two external capacitors CL1 and CL2 and shielding them with the clean ground lines. The VSSOSC should not be connected to PCB ground.

Copyright © 2009–2011, Texas Instruments Incorporated

Load capacitance (Cload) of the crystal varying with the crystal vendors is the total capacitance value of the entire oscillation circuit system as seen from the crystal. It includes two external capacitors CL1 and CL2 in Figure 5-4. CVSS below is optional, but recommended for minimum jitter implementation. The trace length between the decoupling capacitors and the corresponding power pins on the TUSB1310 needs to be minimized. It is also recommended that the trace length from the capacitor pad to the power or ground plane be minimized.

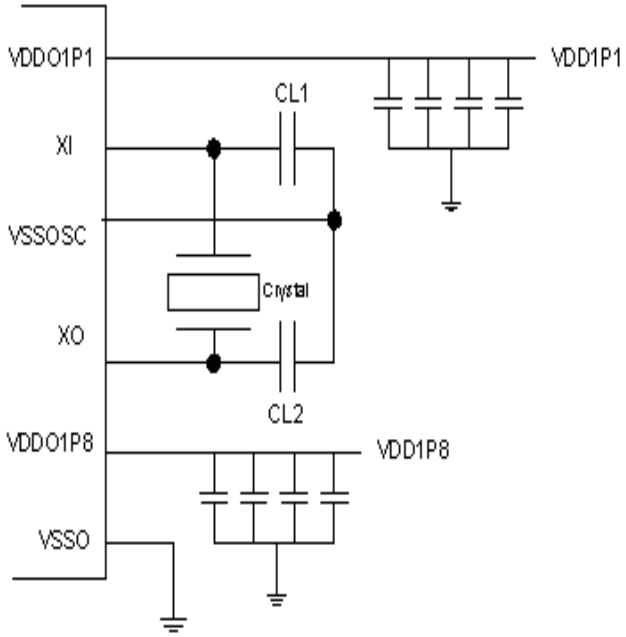

Figure 5-4. Typical Crystal Connections

5.2 Clock Source Requirements

5.2.1 Clock Source Selection Guide

Reference clock jitter is an important parameter. Jitter on the reference clock will degrade both the transmit eye and receiver jitter tolerance no matter how clean the rest of the PLL is, thereby impairing sys-tem performance. Additionally, a particularly jittery reference clock may interfere with PLL lock detection mechanism, forcing the lock detector to issue an unlock signal. A good quality, low jitter reference clock is required to achieve compliance with supported USB3.0 standards. For example, USB3.0 specification requires the random jitter (RJ) component of either RX or TX to be 2.42 ps (random phase jitter calculated after applying jitter transfer function - JTF). As the PLL typically has a number of additional jitter components, the reference clock jitter must be considerably below the overall jitter budget.

Copyright © 2009–2011, Texas Instruments Incorporated

5.2.2 Oscillator

If an external clock source is used, XI should be tied to the clock source and XO should be left floating.

Table 5-1. Oscillator Specification

PARAMETER	CONDITION	MIN	TYP	MAX	UNIT
Frequency tolerance	Operational temperature			±50	ppm
Frequency stability	1 year aging			±50	ppm
Rise / Fall time	20% - 80%			6	ns
Reference clock R_J with JTF (1 sigma)(1)(2)			0.8		ps
Reference clock T_J with JTF (total p-p)(2)(3)			25		ps
Reference clock jitter (absolute p-p)(4)			50		ps

(1) Sigma value assuming Gaussian distribution
(2) After application of JTF
(3) Calculated as 14.1 x R_J + D_J
(4) Absolute phase jitter (p-p)

5.2.3 Crystal

Either a 20-MHz, 25-MHz, 30-MHz, or 40-MHz crystal can be selected. A parallel, 20-pF load crystal should be used if a crystal source is used.

Table 5-2. Oscillator Specification

PARAMETER	CONDITION	MIN	TYP	MAX	UNIT
Frequency tolerance	Operational temperature			±50	ppm
Frequency stability	1 year aging			±50	ppm
Load capacitance		12	20	24	pF

Copyright © 2009–2011, Texas Instruments Incorporated

6 ELECTRICAL SPECIFICATIONS

6.1 ABSOLUTE MAXIMUM RATINGS

over operating free-air temperature range (unless otherwise noted)

		VALUE	UNIT
V_{DD1P1}	Digital 1.1 steady-state supply voltage	-0.3 to 1.4	V
V_{DD1P8}	Digital IO 1.8 steady-state supply voltage	-0.3 to 2.45	V
V_{DDA1P1}	Analog 1.1 steady-state supply voltage	-0.3 to 1.4	V
V_{DDA1P8}	Analog 1.8 steady-state supply voltage	-0.3 to 2.45	V
V_{DDA3P3}	Analog 3.3 steady-state supply voltage	-0.3 to 3.8	V

6.2 RECOMMENDED OPERATING CONDITIONS

over operating free-air temperature range (unless otherwise noted)

			MIN	NOM	MAX	UNIT
V_{DDA3P3}	Analog 3.3 supply voltage		2.97	3.3	3.63	V
V_{DDA1P8}	Analog 1.8 supply voltage		1.71	1.8	1.98	V
V_{DDA1P1}	Analog 1.1 supply voltage		1.045	1.1	1.155	V
V_{DD1P8}	Digital IO 1.8 supply voltage		1.62	1.8	1.98	V
V_{DD1P1}	Digital 1.1 supply voltage		1.045	1.1	1.155	V
V_{BUS}	Voltage at VBUS PAD		0		1.21	V
T_A	Operating free-air temperature range		0		70	°C
T_J	Operating junction temperature range		-40		105	°C
	ESD	Human Body Model (HBM)	500			V
		Charged Device Model (CDM)	500			

6.3 DC CHARACTERISTICS FOR 1.8-V DIGITAL IO

over operating free-air temperature range (unless otherwise noted)

PARAMETER		MIN	TYP	MAX	UNIT
V_{IH}	High-level input voltage	0.65 x VDDS			V
V_{IL}	Low-level input voltage			0.35 x VDDS	V
V_{OH}	IO = -2 mA, V_{DDS} = 1.62 V to 1.98 V, driver enabled, pullup or pulldown disabled	VDDS - 0.45			V
	IO = -2 mA, V_{DDS} = 1.4 V to 1.6 V, driver enabled, pullup or pulldown disabled	0.75 x VDDS			
V_{OL}	IO = 2 mA, driver enabled, V_{DDS} = 1.62 V to 1.98 V, pullup or pulldown disabled			0.45	V
	IO = 2 mA, V_{DDS} = 1.4 V to 1.6 V, driver enabled, pullup or pulldown disabled			0.25 x VDDS	
V_{hys}	Input hysteresis	100	270		mV
I_I	Any receiver, including those with a pullup or pulldown. The pullup or pulldown must be disabled.			±1	µA
$I_{I(PUon)}$	Receiver/pullup only, pullup enabled (not inhibited), V_{PAD} = 0 V		-47 to -169		µA
	Receiver/pullup only, pullup enabled (not inhibited)		-100		
I_{OZ}	Driver only, driver disabled			±20	µA
I_Z (1)				±20	µA
$V_{TX_DIFF_SS}$	SSTXP/SSTXN Differential p-p Tx voltage swing	0.8		1.2	V

(1) I_Z is the total leakage current through the PAD connection of a driver/receiver combination that may include a pullup or pulldown. The driver output is disabled and the pullup or pulldown is inhibited.

Copyright © 2009–2011, Texas Instruments Incorporated

DC CHARACTERISTICS FOR 1.8-V DIGITAL IO *(continued)*

over operating free-air temperature range (unless otherwise noted)

PARAMETER		MIN	TYP	MAX	UNIT
$R_{TX_DIFF_DC}$	DC differential impedance	72		120	Ω
$V_{TX_RCV_DET}$	The amount of voltage change allowed during receiver detection			0.6	V
$C_{AC_COUPLING}$	AC coupling capacitor	75		200	nF
R_{RX_DC}	Receiver DC common mode impedance	18		30	Ω
$R_{RX_DIFF_DC}$	DC differential impedance	72		120	Ω
$V_{RX_LFPS_DET}$	LFPS detect threshold	100		300	mV
$V_{CM_AC_LFPS}$				100	mV
$V_{CM_LFPS_active}$				10	mV
$V_{TX_DIFF_PP_LFPS}$		800		1200	mV

6.4 DEVICE POWER CONSUMPTION(1)

over operating free-air temperature range (unless otherwise noted)

PARAMETER	MIN	TYP	MAX	UNIT
VDDA3P3 power consumption		13		mW
VDDA1P8 power consumption		77		mW
VDDA1P1 power consumption		118		mW
VDD1P1 power consumption		98		mW
VDD1P8 power consumption		128		mW

(1) Power consumption condition is transmitting and/or receiving (in U0) at 25°C and nominal voltages.

6.5 AC Characteristics

6.5.1 Power Up and Reset Timing

The TUSB1310 does not drive signals on any strapping pins before they are latched internally.

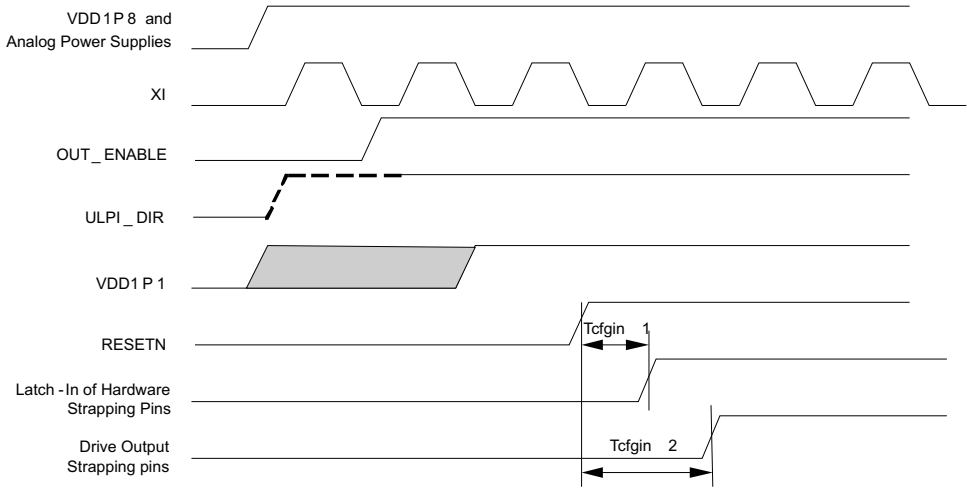

Figure 6-1. Power Up and Reset Timing

Table 6-1. Power Up and Reset Timing

SYMBOL	DESCRIPTION	MIN	TYP	MAX	UNIT
Tcfgin1	Hardware configuration latch-in time from RESETN	0			ns
Tcfgin2	Time from RESETN to dDriver outputs on strapping pins	0			ns
	RESETN pulse width	1			µs
	RESETN to PHY_STATUS de-assertion		300		µs

6.5.2 PIPE Transmit

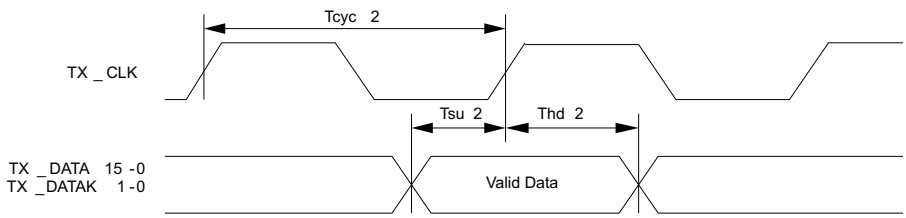

Figure 6-2. PIPE Transmit Timing

Table 6-2. PIPE Transmit Timing

SYMBOL	DESCRIPTION	MIN	TYP	MAX	UNIT
Tcyc2	TX_CLK Period		4		ns
Tdty2	TX_CLK Period		50		%
Tsu2	Data Setup to TX_CLK rise and TX_CLK fall (1)	1			ns
Thd2	Data Hold to TX_CLK rise and TX_CLK fall (1)	0			ns

(1) This includes TX_DATA15-0, TX_DATAK1-0, TX_ONESZEROS, RATE, TX_DEEMPTH, TX_DETRX_LPBK, TX_ELECIDLE, TX_MARGIN, TX_SWING, RX_POLARITY, POWER_DOWN1-0.

6.5.3 PIPE Receive

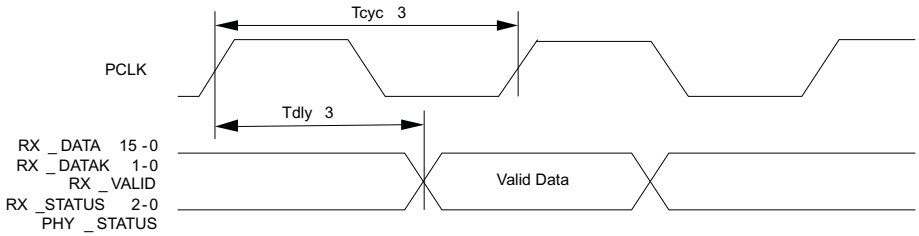

Figure 6-3. PIPE Receive Timing

Table 6-3. PIPE Receive Timing

SYMBOL	DESCRIPTION	MIN	TYP	MAX	UNIT
Tcyc3	PCLK Period		4		ns
Tdty3	PCLK Duty Cycle		50		%
Tdly3	PCLK rise and fall to RX_DATA15-0, RX_DATAK1-0, RX_VALID, RX_STATUS2-0, PHY_STATUS Delay (1)(2)	1		2	ns

(1) Output Load max = 10 pF, min = 5 pF
(2) Timing is relative to the 50% transition point, not V_{IH}/V_{IL}.

Copyright © 2009–2011, Texas Instruments Incorporated

6.5.4 ULPI Parameters

Table 6-4. ULPI Parameters

DESCRIPTION	NOTES	HS	FS	LS	UNIT
RX CMD delay	PHY pipeline delays	2-4	2-4	2-4	clocks
TX start delay		1-2	1-10	1-10	clocks
TX end delay		2-5			clocks
RX start delay		3-8			clocks
RX end delay		3-8	17-18	122-123	clocks
Transmit-Transmit (host only)	Link decision times	15-24	7-18	77-247	clocks
Receive-Transmit (host or peripheral)		1-14	7-18	77-247	clocks

6.5.5 ULPI Clock

Table 6-5. ULPI Clock Parameters

SYMBOL	DESCRIPTION	MIN	TYP	MAX	UNIT
Fstart_8bit	Frequency (first transition) ±10%	54	60	66	MHz
Fsteady	Frequency (steady state) ±500 ppm	59.97	60	60.03	MHz
Dstart_8bit	Duty cycle (first transition) ±10%	40	50	60	%
Dsteady	Duty cycle (steady state) ±500 ppm	49.975	50	50.025	%
Tsteady	Time to reach steady state frequency and duty cycle after first transition			1.4	ms
Tstart_dev	Clock startup time after deassertion of SuspemdM – Peripheral			5.6	ms
Tstart_host	Clock startup time after deassertion of SuspemdM – Hold				ms
Tprep	PHY preparation time after first transition of input clock				µs
Tjitter	Jitter				ps
Trise/Tfall	Rise and fall time				ns

6.5.6 ULPI Transmit

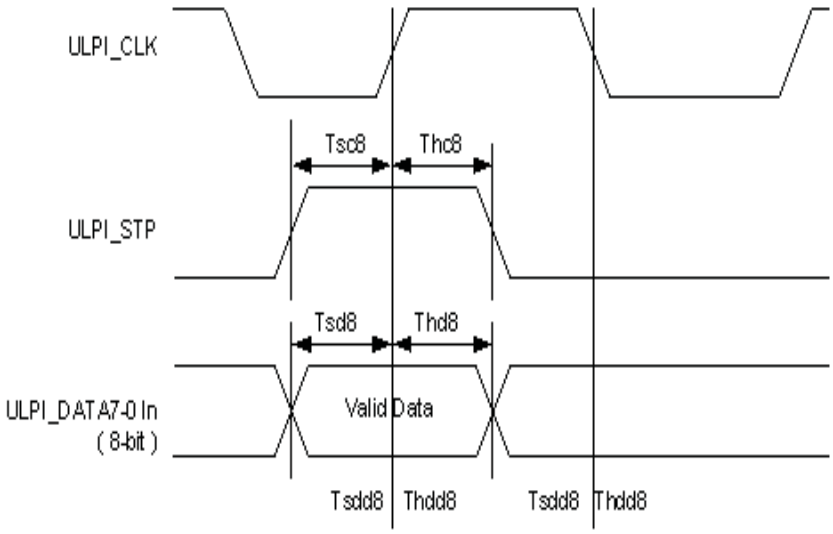

Figure 6-4. ULPI Transmit Timing

Table 6-6. ULPI Transmit Timing

SYMBOL	DESCRIPTION	MIN	TYP	MAX	UNIT
Tsc8, Tsd8	ULPI_STP setup time			6	ns
Thc8, Thd8	ULPI_STP hold time	0			ns

6.5.7 ULPI Receive Timing

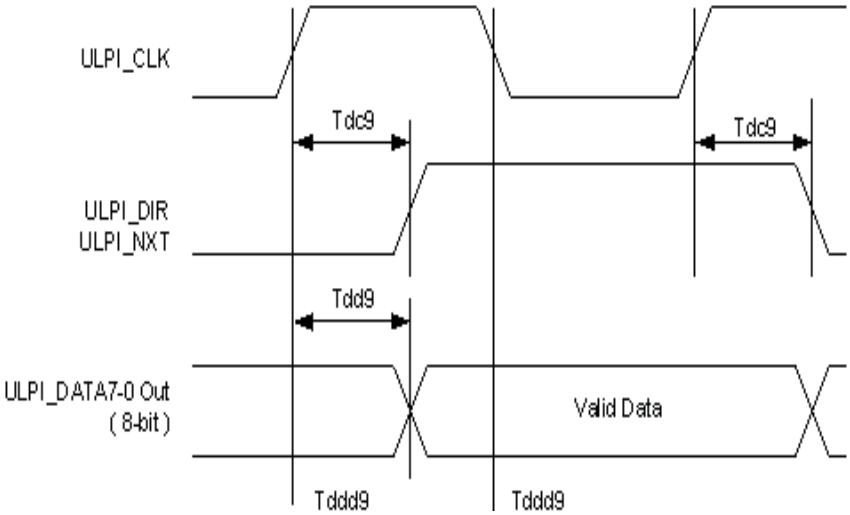

Figure 6-5. ULPI Receive Timing

Table 6-7. ULPI Transmit Timing

SYMBOL	DESCRIPTION	MIN	TYP	MAX	UNIT
Tdc9, Tdd9	ULPI_DIR/ULPI_NXT/ULPI_DATA7-0 (1)			9	ns

(1) Output Load max = 10 pF, min = 5 pF

6.5.8 Power State Transition Time

The P1 to P0 transition time is the amount of time for the TUSB1310 to return to P0 state, after having been in the P1 state. This time is measured from when the MAC sets the POWER_DOWN signals to P0 until the TUSB1310 asserts PHY_STATUS. The TUSB1310 asserts PHY_STATUS when it is ready to begin data transmission and reception.

The P2 to P0 transition time is the amount of time for the TUSB1310 to return to the P0 state, after having been in the P2 state. This time is measured from when the MAC sets the POWER_DOWN signals to P0 until the TUSB1310 asserts PHY_STATUS. The TUSB1310 asserts PHY_STATUS when it is ready to begin data transmission and reception.

The P3 to P0 transition time is the amount of time for the TUSB1310 to go to P0 state, after having been in the P3 state. Time is measured from when the MAC sets the POWER_DOWN signals to P0 until the TUSB1310 deasserts PHY_STATUS. The TUSB1310 asserts PHY_STATUS when it is ready to begin data transmission and reception.

Copyright © 2009–2011, Texas Instruments Incorporated

PACKAGING INFORMATION

Orderable Device	Status (1)	Package Type	Package Drawing	Pins	Package Qty	Eco Plan (2)	Lead/Ball Finish	MSL Peak Temp (3)	Op Temp (°C)	Top-Side Markings (4)	Samples
TUSB1310ZAY	NRND	NFBGA	ZAY	175	160	Green (RoHS & no Sb/Br)	SNAGCU	Level-3-260C-168 HR	0 to 70	TUSB1310	

(1) The marketing status values are defined as follows:
ACTIVE: Product device recommended for new designs.
LIFEBUY: TI has announced that the device will be discontinued, and a lifetime-buy period is in effect.
NRND: Not recommended for new designs. Device is in production to support existing customers, but TI does not recommend using this part in a new design.
PREVIEW: Device has been announced but is not in production. Samples may or may not be available.
OBSOLETE: TI has discontinued the production of the device.

(2) Eco Plan - The planned eco-friendly classification: Pb-Free (RoHS), Pb-Free (RoHS Exempt), or Green (RoHS & no Sb/Br) - please check http://www.ti.com/productcontent for the latest availability information and additional product content details.
TBD: The Pb-Free/Green conversion plan has not been defined.
Pb-Free (RoHS): TI's terms "Lead-Free" or "Pb-Free" mean semiconductor products that are compatible with the current RoHS requirements for all 6 substances, including the requirement that lead not exceed 0.1% by weight in homogeneous materials. Where designed to be soldered at high temperatures, TI Pb-Free products are suitable for use in specified lead-free processes.
Pb-Free (RoHS Exempt): This component has a RoHS exemption for either 1) lead-based flip-chip solder bumps used between the die and package, or 2) lead-based die adhesive used between the die and leadframe. The component is otherwise considered Pb-Free (RoHS compatible) as defined above.
Green (RoHS & no Sb/Br): TI defines "Green" to mean Pb-Free (RoHS compatible), and free of Bromine (Br) and Antimony (Sb) based flame retardants (Br or Sb do not exceed 0.1% by weight in homogeneous material)

(3) MSL, Peak Temp. -- The Moisture Sensitivity Level rating according to the JEDEC industry standard classifications, and peak solder temperature.

(4) Multiple Top-Side Markings will be inside parentheses. Only one Top-Side Marking contained in parentheses and separated by a "~" will appear on a device. If a line is indented then it is a continuation of the previous line and the two combined represent the entire Top-Side Marking for that device.

Important Information and Disclaimer: The information provided on this page represents TI's knowledge and belief as of the date that it is provided. TI bases its knowledge and belief on information provided by third parties, and makes no representation or warranty as to the accuracy of such information. Efforts are underway to better integrate information from third parties. TI has taken and continues to take reasonable steps to provide representative and accurate information but may not have conducted destructive testing or chemical analysis on incoming materials and chemicals. TI and TI suppliers consider certain information to be proprietary, and thus CAS numbers and other limited information may not be available for release.

In no event shall TI's liability arising out of such information exceed the total purchase price of the TI part(s) at issue in this document sold by TI to Customer on an annual basis.

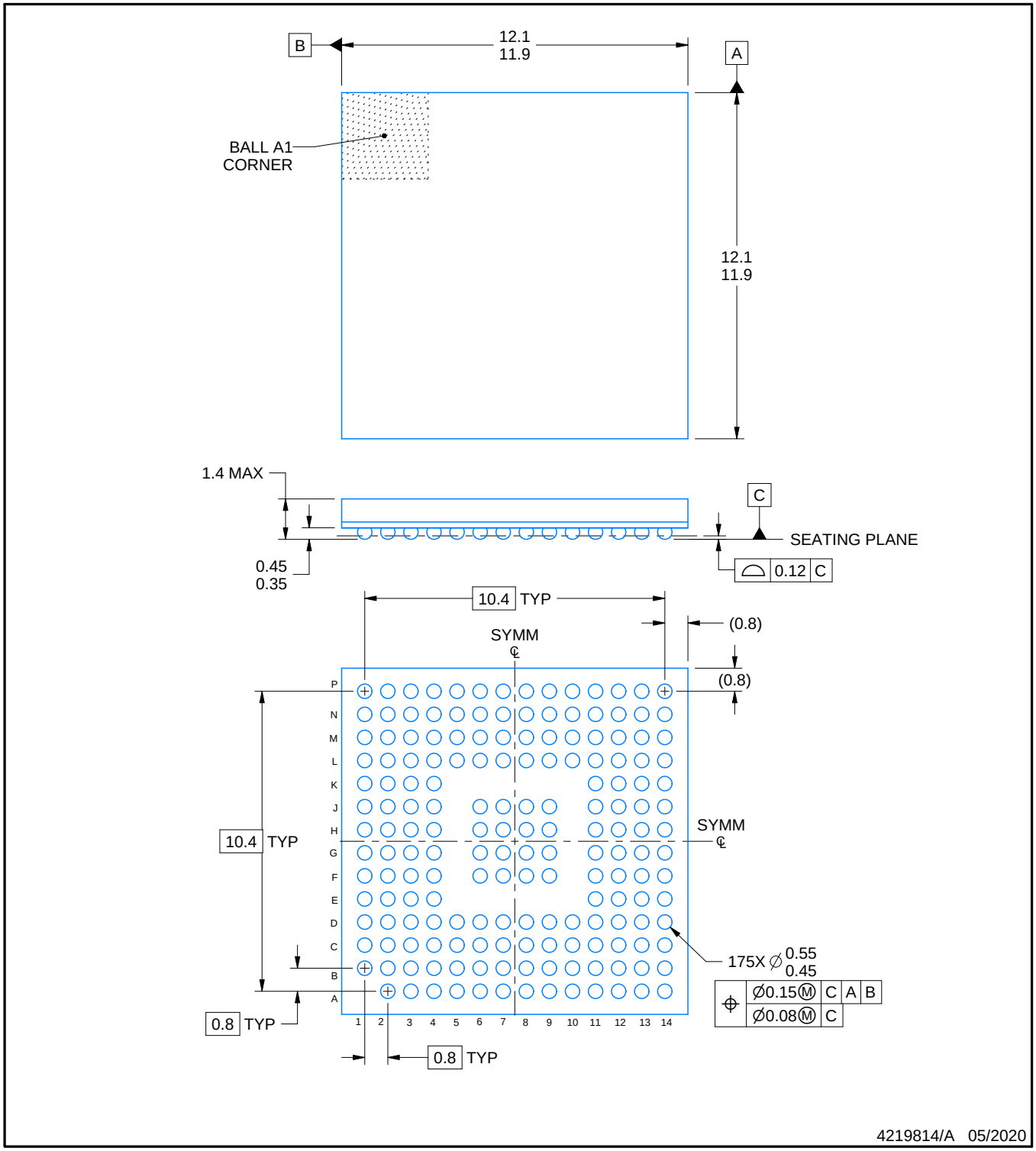

NOTES:

1. All linear dimensions are in millimeters. Any dimensions in parenthesis are for reference only. Dimensioning and tolerancing per ASME Y14.5M.
2. This drawing is subject to change without notice.

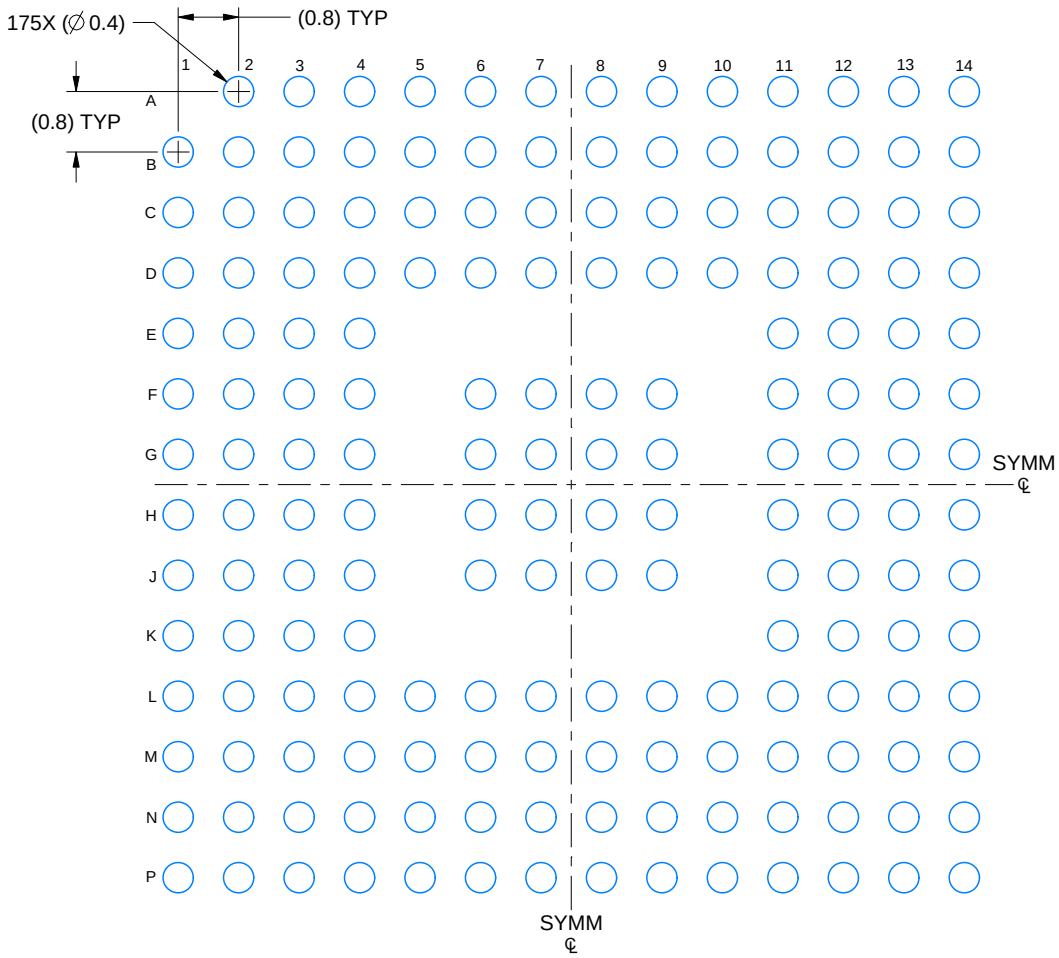

LAND PATTERN EXAMPLE
EXPOSED METAL SHOWN
SCALE: 10X

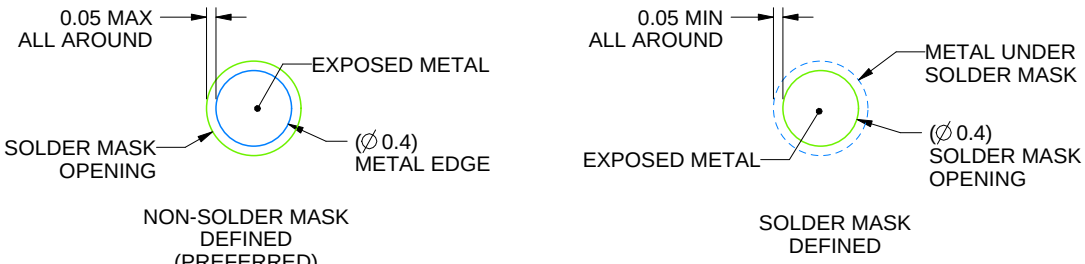

SOLDER MASK DETAILS
NOT TO SCALE

4219814/A 05/2020

NOTES: (continued)

3. Final dimensions may vary due to manufacturing tolerance considerations and also routing constraints.
For information, see Texas Instruments literature number SPRAA99 (www.ti.com/lit/spraa99).

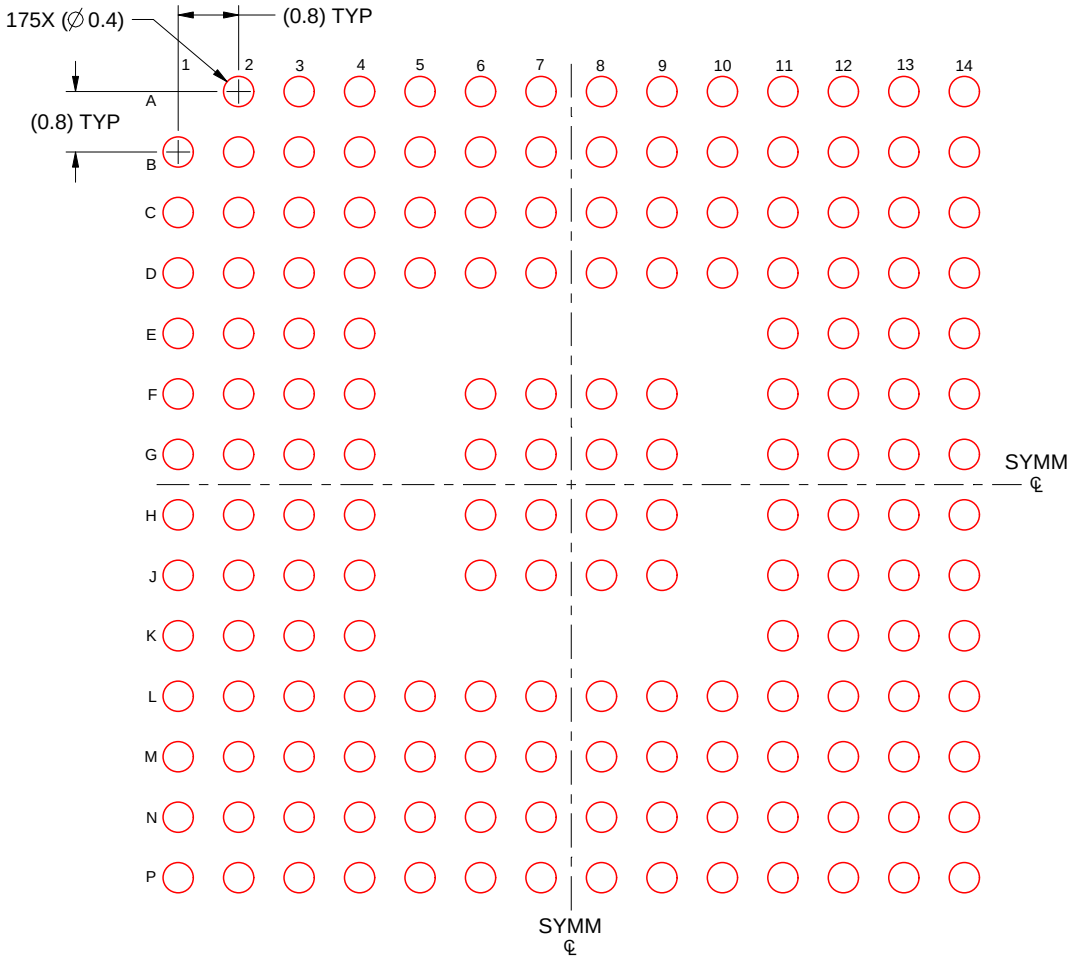

SOLDER PASTE EXAMPLE
BASED ON 0.125 mm THICK STENCIL
SCALE: 10X

4219814/A 05/2020

NOTES: (continued)

4. Laser cutting apertures with trapezoidal walls and rounded corners may offer better paste release.

IMPORTANT NOTICE AND DISCLAIMER

TI PROVIDES TECHNICAL AND RELIABILITY DATA (INCLUDING DATASHEETS), DESIGN RESOURCES (INCLUDING REFERENCE DESIGNS), APPLICATION OR OTHER DESIGN ADVICE, WEB TOOLS, SAFETY INFORMATION, AND OTHER RESOURCES “AS IS” AND WITH ALL FAULTS, AND DISCLAIMS ALL WARRANTIES, EXPRESS AND IMPLIED, INCLUDING WITHOUT LIMITATION ANY IMPLIED WARRANTIES OF MERCHANTABILITY, FITNESS FOR A PARTICULAR PURPOSE OR NON-INFRINGEMENT OF THIRD PARTY INTELLECTUAL PROPERTY RIGHTS.

These resources are intended for skilled developers designing with TI products. You are solely responsible for (1) selecting the appropriate TI products for your application, (2) designing, validating and testing your application, and (3) ensuring your application meets applicable standards, and any other safety, security, or other requirements. These resources are subject to change without notice. TI grants you permission to use these resources only for development of an application that uses the TI products described in the resource. Other reproduction and display of these resources is prohibited. No license is granted to any other TI intellectual property right or to any third party intellectual property right. TI disclaims responsibility for, and you will fully indemnify TI and its representatives against, any claims, damages, costs, losses, and liabilities arising out of your use of these resources.

TI’s products are provided subject to TI’s Terms of Sale (www.ti.com/legal/termsofsale.html) or other applicable terms available either on ti.com or provided in conjunction with such TI products. TI’s provision of these resources does not expand or otherwise alter TI’s applicable warranties or warranty disclaimers for TI products.

Mailing Address: Texas Instruments, Post Office Box 655303, Dallas, Texas 75265
Copyright © 2020, Texas Instruments Incorporated