- **CMOS/EEPROM/EPROM Technologies on a Single Device**
  - **Mask-ROM Devices for High-Volume Production**
  - **One-Time-Programmable (OTP) EPROM Devices for Low Volume Production**
  - **Reprogrammable EPROM Devices for Prototyping Purposes**
- **Internal System Memory Configurations**
  - **On-Chip Program Memory Versions**
    - **ROM: 8K Bytes**
    - **EPROM: 8K Bytes**
  - **Data EEPROM: 256 Bytes**
  - **Static RAM: 256 Bytes Usable as Registers**
- **Flexible Operating Features**
  - **Low-Power Modes: STANDBY and HALT**
  - **Commercial, Industrial, and Automotive Temperature Ranges**
  - **Clock Options**
    - **Divide-by-4 (0.5 to 5 MHz SYSCLK)**
    - **Divide-by-1 (2 to 5 MHz SYSCLK) Phase-Locked Loop (PLL)**
  - **Supply Voltage (V_{CC}) 5 V ±10%**
- **16-Bit General-Purpose Timer**
  - **Software Configurable as a 16-Bit Event Counter, or a 16-Bit Pulse Accumulator, or a 16-Bit Input Capture Functions, or Two Compare Registers, or a Self-Contained Pulse-Width-Modulation (PWM) Function**
  - **Software Programmable Input Polarity**
  - **Eight-Bit Prescaler, Providing a 24-Bit Real-Time Timer**
- **On-Chip 24-Bit Watchdog Timer**
  - **EPROM/OTP Devices: Standard Watchdog**
  - **Mask-ROM Devices: Hard Watchdog, Simple Counter, or Standard Watchdog**
- **Flexible Interrupt Handling**
  - **Two Software-Programmable Interrupt Levels**
  - **Global- and Individual-Interrupt Masking**
  - **Programmable Rising or Falling Edge Detect**
  - **Individual Interrupt Vectors**

FZ AND FN PACKAGES
(TOP VIEW)

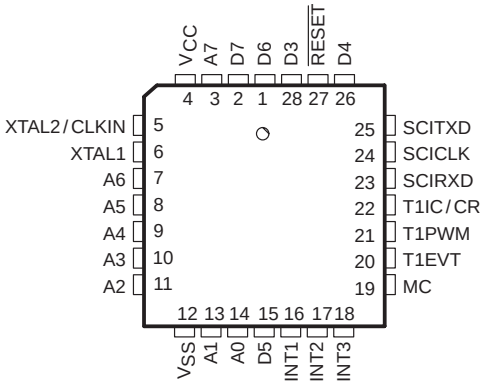

- **Serial Communications Interface 1 (SCI1)**
  - **Asynchronous Mode: 156K bps Maximum at 5 MHz SYSCLK**
  - **Isosynchronous Mode: 25M bps Maximum at 5 MHz SYSCLK**
  - **Full Duplex, Double-Buffered Receiver (RX) and Transmitter (TX)**
  - **Two Multiprocessor Communication Formats**
- **TMS370 Series Compatibility**
  - **Register-to-Register Architecture**
  - **256 General-Purpose Registers**
  - **14 Powerful Addressing Modes**
  - **Instructions Upwardly Compatible With All TMS370 Devices**
- **CMOS/TTL Compatible I/O Pins/Packages**
  - **All Peripheral Function Pins Software Configurable for Digital I/O**
  - **21 Bidirectional Pins, 1 Input Pin**
  - **28-Pin Plastic and Ceramic Leaded Chip Carrier Packages**
- **Workstation/Personal Computed-Based Development System**
  - **C Compiler and C Source Debugger**
  - **Real-time In-Circuit Emulation**
  - **Extensive Breakpoint/Trace Capability**
  - **Multi-Window User Interface**
  - **Microcontroller Programmer**

Please be aware that an important notice concerning availability, standard warranty, and use in critical applications of Texas Instruments semiconductor products and disclaimers thereto appears at the end of this data sheet.

PRODUCTION DATA information is current as of publication date. Products conform to specifications per the terms of Texas Instruments standard warranty. Production processing does not necessarily include testing of all parameters.

Copyright © 1997, Texas Instruments Incorporated

Pin Descriptions

28 PINS LCC		I/O†	DESCRIPTION
NAME	NO.		
A0 A1 A2 A3 A4 A5 A6 A7	14 13 11 10 9 8 7 3	I / O	Port A is a general-purpose bidirectional I/O port.
D3 D4 D5 D6 D7	28 26 15 1 2	I / O	Port D is a general-purpose bidirectional I/O port. D3 is also configurable as SYSCLK.
INT1 INT2 INT3	16 17 18	I I / O I / O	External interrupt (non-maskable or maskable)/general-purpose input pin External maskable interrupt input/general-purpose bidirectional pin External maskable interrupt input/general-purpose bidirectional pin
T1IC/CR T1PWM T1EVT	22 21 20	I / O	Timer1 input capture/counter reset input pin /general-purpose bidirectional pin Timer1 PWM output pin/general-purpose bidirectional pin Timer1 external event input pin/general-purpose bidirectional pin
SCITXD SCIRXD SCICLK	25 23 24	I / O	SCI transmit data output pin, general-purpose bidirectional pin‡ SCI receive data input pin/general-purpose bidirectional pin SCI bidirectional serial clock pin/general-purpose bidirectional pin
$\overline{\text{RESET}}$	27	I / O	System reset bidirectional pin; as input pin, $\overline{\text{RESET}}$ initializes the microcontroller; as open-drain output, $\overline{\text{RESET}}$ indicates that an internal failure was detected by watchdog or oscillator fault circuit.
MC	19	I	Mode control input pin; enables EEPROM write protection override (WPO) mode, also EPROM V_{PP}
XTAL2/CLKIN XTAL1	5 6	I O	Internal oscillator crystal input/External clock source input Internal oscillator output for crystal
V_{CC}	4		Positive supply voltage
V_{SS}	12		Ground reference

† I = input, O = output
‡ The three-pin SCI configuration is referred to as SCI1.

functional block diagram

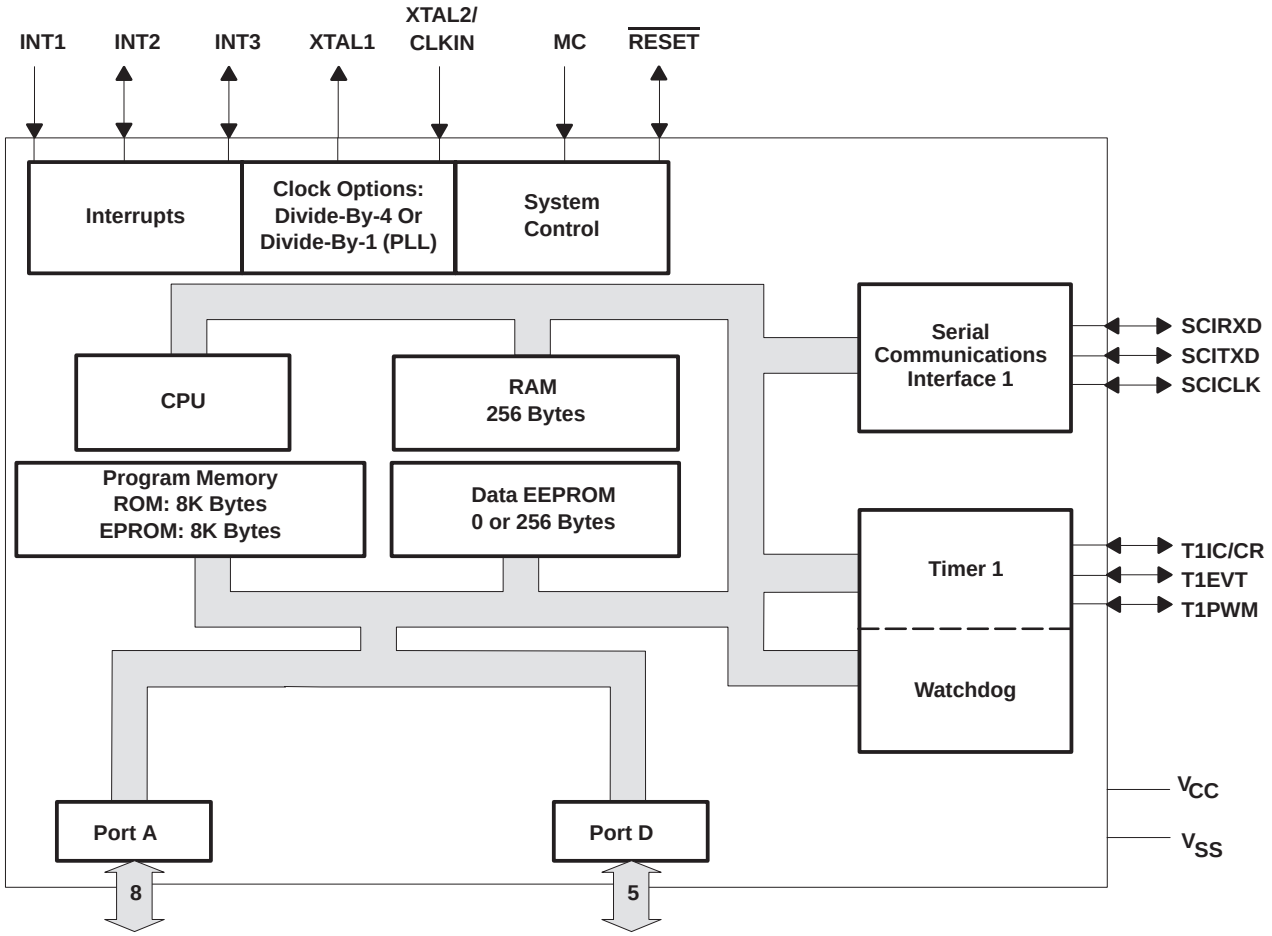

description

The TMS370C002, TMS370C302, TMS370C702, and SE370C702 devices are members of the TMS370 family of single-chip 8-bit microcontrollers. Unless otherwise noted, the term TMS370Cx0x refers to these devices. The TMS370 family provides cost-effective real-time system control through integration of advanced peripheral function modules and various on-chip memory configurations.

The TMS370Cx0x family of devices is implemented using high-performance silicon-gate CMOS EPROM and EEPROM technologies. Low-operating power, wide-operating temperature range, and noise immunity of CMOS technology coupled with the high performance and extensive on-chip peripheral functions make the TMS370Cx0x devices attractive in system designs for automotive electronics, industrial motors, computer peripheral controls, telecommunications, and consumer applications.

All TMS370Cx0x devices contain the following on-chip peripheral modules:

- Serial communications interface 1 (SCI1)
- One 16-bit general-purpose timer with an 8-bit prescaler
- One 24-bit general-purpose watchdog timer

Table 1 provides a memory configuration overview of the TMS370Cx0x devices.

description (continued)

Table 1. Memory Configurations

DEVICE	PROGRAM MEMORY (BYTES)		DATA MEMORY (BYTES)		28-PIN PACKAGE
	ROM	EPROM	RAM	EEPROM	
TMS370C002A	8K	—	256	256	FN – PLCC
TMS370C302A	8K	—	256	—	FN – PLCC
TMS370C702	—	8K	256	256	FN – PLCC
SE370C702†	—	8K	256	256	FZ – CLCC

† System evaluators and development are for use only in prototype environment and their reliability has not been characterized.

The suffix letter (A) appended to the device name (shown in the first column of Table 1) indicates the configuration of the device. ROM and EPROM devices have different configurations as indicated in Table 2. ROM devices with the suffix letter A are configured through a programmable contact during manufacture.

Table 2. Suffix Letter Configuration

DEVICE	WATCHDOG TIMER	CLOCK	LOW-POWER MODE
EPROM without A	Standard	Divide-by-4 (standard oscillator)	Enabled
ROM A	Standard	Divide-by-4 or Divide-by-1 (PLL)	Enabled or disabled
	Hard		
	Simple		

The 8K bytes of mask-programmable ROM in the associated TMS370Cx0x devices are replaced in the TMS370C702 with 8K bytes of EPROM. All other available memory and on-chip peripherals are identical, with the exception of no data EEPROM on the TMS370C302 devices. The one-time programmable (OTP) (TMS370C702) device and reprogrammable device (SE370C702) are available.

TMS370C702 OTP devices are available in plastic packages. This microcontroller is effective to use for immediate production updates for other members of the TMS370Cx0x family or for low-volume production runs when the mask charge or cycle time for low-cost mask ROM devices is not practical.

The SE370C702 has a windowed ceramic package to allow reprogramming of the program EPROM memory during the development-prototyping phase of design. The SE370C702 devices allow quick updates to breadboards and prototype systems while iterating initial designs.

The TMS370Cx0x family provides two low-power modes (STANDBY and HALT) for applications where low-power consumption is critical. Both modes stop all CPU activity (that is, no instructions are executed). In the STANDBY mode, the internal oscillator and the general purpose timer remain active. In the HALT mode, all device activity is stopped. The device retains all RAM data and peripheral configuration bits throughout both low-power modes.

The TMS370Cx0x features advanced register-to-register architecture that allows direct arithmetic and logical operations without requiring an accumulator (for example, ADD R24, R47; add the contents of register 24 to the contents of register 47 and store the result in register 47). The TMS370Cx0x family is fully instruction-set-compatible, providing easy transition between members of the TMS370 8-bit microcontroller family.

The TMS370Cx0x devices have two operational modes of serial communications provided by the SCI1 module. The SCI1 allows standard RS-232-C communications with other common data transmission equipment.

description (continued)

The TMS370Cx0x family provides the system designer with an economical, efficient solution to real-time control applications. The TMS370 family compact development tool (CDT™) solves the challenge of efficiently developing the software and hardware required to design the TMS370Cx0x into an ever-increasing number of complex applications. The application source code can be written in assembly and C-language, and the output code can be generated by the linker. The TMS370 family CDT development tool can communicate through a standard RS-232-C interface with an existing personal computer. This allows the use of the personal computer editors and software utilities already familiar to the designer. The TMS370 family CDT emphasizes ease-of-use through extensive menus and screen windowing so that a system designer with minimal training can begin developing software. Precise real-time in-circuit emulation and extensive symbolic debug and analysis tools ensure efficient software and hardware implementation as well as reduced time-to-market cycle.

The TMS370Cx0x family together with the TMS370 family CDT370, design kit, starter kit, software tools, the SE370C712 reprogrammable devices, comprehensive product documentation, and customer support provide a complete solution to the needs of the system designer.

central processing unit (CPU)

The CPU used on the TMS370Cx0x device is the high-performance 8-bit TMS370 CPU module. The ’x0x implements an efficient register-to-register architecture that eliminates the conventional accumulator bottleneck. The complete ’x0x instruction map is shown in Table 15 in the TMS370Cx0x instruction set overview section.

The ’370Cx0x CPU architecture provides the following components:

CPU registers:

- A stack pointer that points to the last entry in the memory stack
- A status register that monitors the operation of the instructions and contains the global interrupt enable bits
- A program counter (PC) that points to the memory location of the next instruction to be executed

Figure 1 illustrates the CPU registers and memory blocks.

CDT is a trademark of Texas Instruments Incorporated.

central processing unit (CPU) (continued)

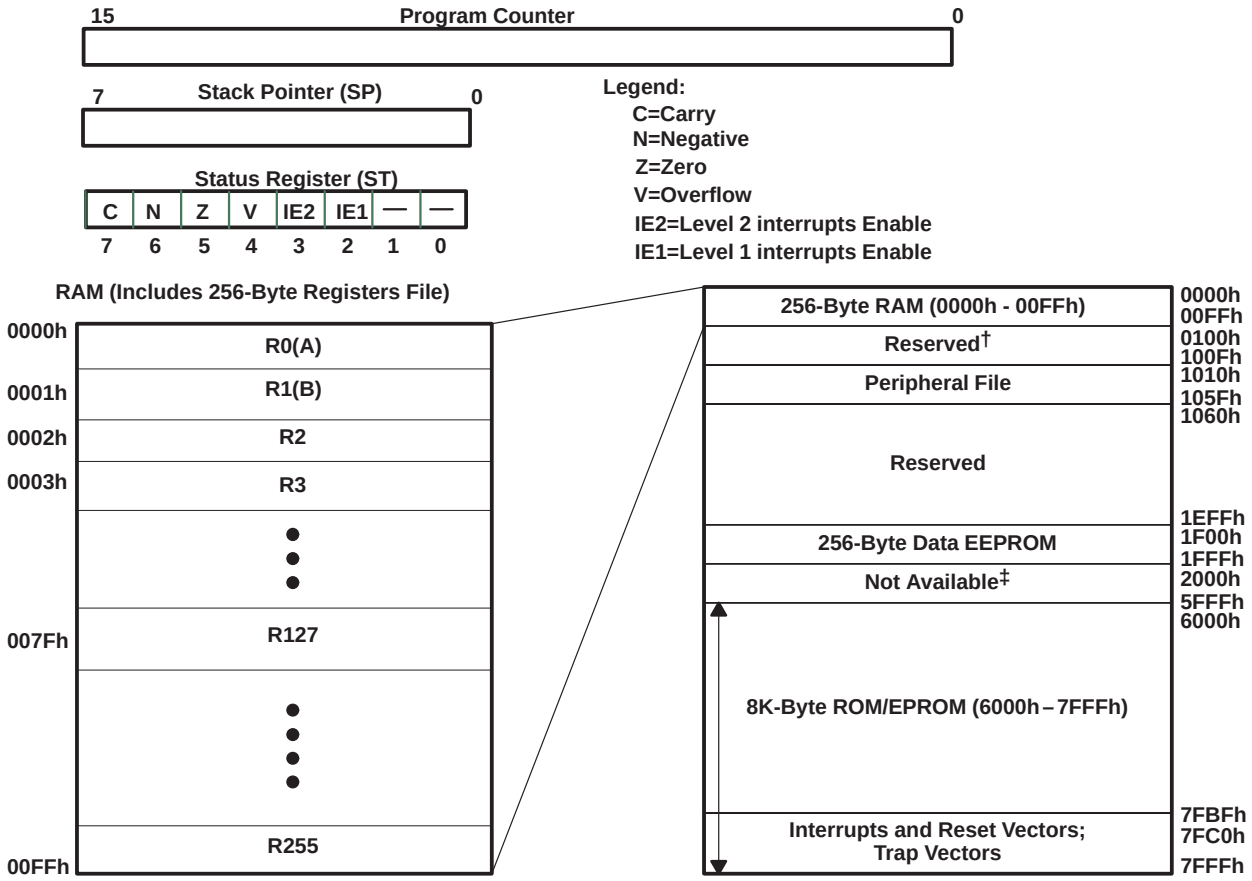

† Reserved means the address space is reserved for future expansion.
‡ Not available means the address space is not accessible.

Figure 1. Programmer's Model

A memory map that includes:

- 256-byte general-purpose RAM that can be used for data memory storage, program instructions, general-purpose register, or the stack
- A peripheral file that provides access to all internal peripheral modules, system-wide control functions and EEPROM/EPROM programming control
- 256-byte EEPROM module that provides in-circuit programmability and data retention in power-off conditions
- 8K-byte ROM or 8K-byte EPROM program memory

stack pointer (SP)

The SP is an 8-bit CPU register. Stack operates as a last-in, first-out, read/write memory. The stack is used typically to store the return address on subroutine calls as well as the status-register contents during interrupt sequences.

The SP points to the last entry or top of the stack. The SP is incremented automatically before data is pushed onto the stack and decremented after data is popped from the stack. The stack can be placed anywhere in the on-chip RAM memory.

central processing unit (CPU) (continued)

status register (ST)

The ST monitors the operation of the instructions and contains the global-interrupt-enable bits. The ST register includes four status bits (condition flags) and two interrupt-enable bits:

- The four status bits indicate the outcome of the previous instruction; conditional instructions (for example, the conditional jump instructions) use the status bits to determine program flow.
- The two interrupt enable bits control the two interrupt levels.

The ST register, status-bit notation, and status-bit definitions are shown in Table 3.

Table 3. Status Registers (ST)

7	6	5	4	3	2	1	0
C	N	Z	V	IE2	IE1	Reserved	Reserved
RW-0	RW-0	RW-0	RW-0	RW-0	RW-0		

R = read, W = write, 0 = value after reset

program counter (PC)

The contents of the PC point to the memory location of the next instruction to be executed. The PC consists of two 8-bit registers in the CPU: the program counter high (PCH) and program counter low (PCL). These registers contain the most significant byte and least significant byte of a 16-bit address.

During reset, the contents of the reset vector (7FFEh, 7FFFh) are loaded into the program counter. The PCH (MSbyte of the PC) is loaded with the contents of memory location 7FFEh, and the PCL (LSbyte of the PC) is loaded with the contents of memory location 7FFFh. Figure 2 shows this operation using an example value of 6000h as the contents of the reset vector.

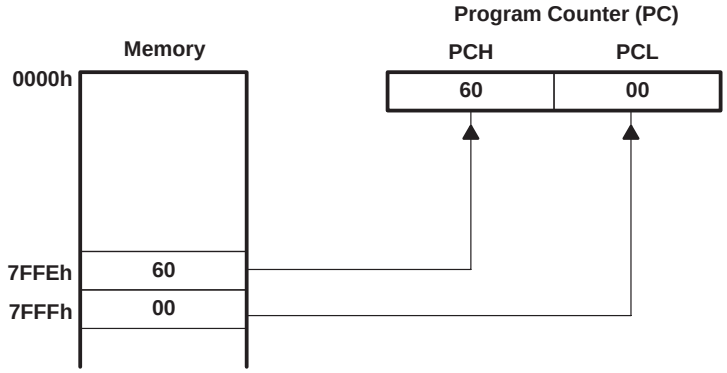

Figure 2. Program Counter After Reset

memory map

The TMS370Cx0x architecture is based on the Von Neuman architecture, where the program memory and data memory share a common address space. All peripheral input/output is memory mapped in this same common address space. As shown in Figure 3, the TMS370Cx0x provides memory-mapped RAM, ROM, Data EEPROM, input/output pins, peripheral functions, and system interrupt vectors.

The peripheral file contains all input/output port control, peripheral status and control, EEPROM, EPROM, and system-wide control functions. The peripheral file is located between 1010h to 105Fh and is divided logically into five peripheral-file frames of 16 bytes each. Each on-chip peripheral is assigned to a separate frame through which peripheral control and data information is passed.

central processing unit (CPU) (continued)

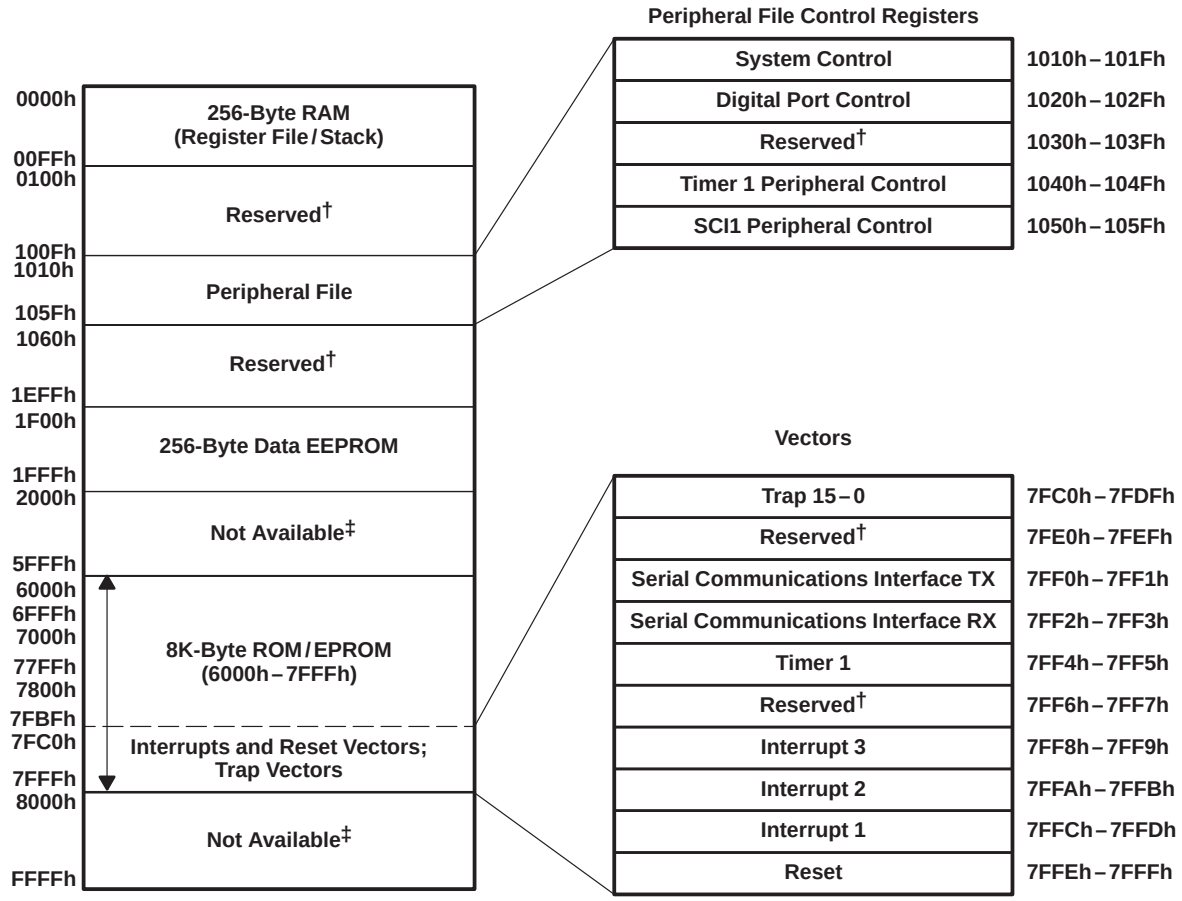

† Reserved means the address space is reserved for future expansion.
‡ Not available means the address space is not accessible.

Figure 3. TMS370Cx0x Memory Map

RAM / register file (RF)

Locations within the RAM address space can serve as the RF, general-purpose read / write memory, program memory, or the stack instructions. The TMS370Cx0x devices contain 256 bytes of internal memory-mapped RAM beginning at location 0000h (R0) and continuing through location 00FFh (R255) which is shown in Figure 1.

The first two registers, R0 and R1, are also called register A and B, respectively. Some instructions implicitly use register A or B; for example, the instruction LDSP (load SP) assumes that the value to be loaded into the stack pointer is contained in register B. Registers A and B are the only registers cleared on reset.

peripheral file (PF)

The TMS370Cx0x control registers contain all the registers necessary to operate the system and peripheral modules on the device. The instruction set includes some instructions that access the PF directly. These instructions designate the register by the number of the PF relative to 1000h, preceded by P0 for a hexadecimal designator or P for a decimal designator. For example, the system control register 0 (SCCR0) is located at address 1010h; its peripheral file hexadecimal designator is P010, and its decimal designator is P16. Table 4 shows the TMS370Cx0x PF address map.

peripheral file (PF) (continued)

Table 4. TMS370Cx0x Peripheral File Address Map

ADDRESS RANGE	PERIPHERAL FILE DESIGNATOR	DESCRIPTION
1000h – 100Fh	P000 – P00F	Reserved
1010h – 101Fh	P010 – P01F	System and EPROM / EEPROM control registers
1020h – 102Fh	P020 – P02F	Digital I / O port control registers
1030h – 103Fh	P030 – P03F	Reserved
1040h – 104Fh	P040 – P04F	Timer 1 registers
1050h – 105Fh	P050 – P05F	Serial communications interface registers
1060h – 10FFh	P060 – P0FF	Reserved

data EEPROM

The TMS370Cx0x devices, containing 256 bytes of data EEPROM, have their memory mapped beginning at location 1F00h and continuing through location 1FFFh. Writing to the data EEPROM module is controlled by the data EEPROM control register (DEECTL) and the write-protection register (WPR). Programming algorithm examples are available in the *TMS370 Family User's Guide* (literature number SPNU127) or the *TMS370 Family Data Manual* (literature number SPNS014B). The data EEPROM features include the following:

- Programming:
  - Bit-, byte-, and block-write / erase modes
  - Internal charge pump circuitry. No external EEPROM programming voltage supply is needed.
  - Control register: Data EEPROM programming is controlled by the DEECTL located in the PF frame beginning at location P01A. See Table 5.
  - In-circuit programming capability. There is no need to remove the device to program.
- Write protection. Writes to the data EEPROM are disabled during the following conditions.
  - Reset. All programming of the data EEPROM module is halted.
  - Write protection active. There is one write-protect bit per 32-byte EEPROM block.
  - Low-power mode operation
- Write protection can be overridden by applying 12 V to MC.

Table 5. Data EEPROM and Program EPROM Control Registers Memory Map

ADDRESS	SYMBOL	NAME
P01A	DEECTL	Data EEPROM control register
P01B	—	Reserved
P01C	EPCTL	Program EPROM control register

program EPROM

The TMS370C702 device contains 8K bytes of EPROM, mapped, at location 6000h and continuing through location 7FFFh as shown in Figure 3. Memory addresses 7FF0h through 7FFFh are reserved for interrupt and reset vectors. Trap vectors, used with TRAP0 through TRAP15 instructions, are located between addresses 7FC0h and 7FDFh. Reading the program EPROM modules is identical to reading other internal memory. During programming, the EPROM is controlled by the EPROM control register (EPCTL). The program EPROM module features include:

- Programming
  - In-circuit programming capability if V_{PP} is applied to MC
  - Control register: EPROM programming is controlled by the EPROM control register (EPCTL) located in the peripheral file (PF) frame at location P01Ch as shown in Table 5.
- Write protection: Writes to the program EPROM are disabled under the following conditions:
  - Reset halts all programming to the EPROM module.
  - Low-power modes
  - 13 V not applied to MC

program ROM

The program read-only memory (ROM) consists of 8K bytes of mask-programmable ROM. The program ROM is used for permanent storage of data or instructions. Memory addresses 7FF0h through 7FFFh are reserved for interrupt and reset vectors. Trap vectors, used with TRAP0 through TRAP15 instructions, are located between addresses 7FC0h and 7FDFh. Programming of the mask ROM is performed at the time of device fabrication. Refer to Figure 3 for ROM memory map.

system reset

The system reset operation ensures an orderly start-up sequence for the TMS370Cx0x CPU-based device. There are up to three different actions that can cause a system reset to the device. Two of these actions are internally generated, while one ($\overline{\text{RESET}}$ pin) is controlled externally. These actions are as follows:

- External $\overline{\text{RESET}}$ pin. A low-level signal can trigger an external reset. To ensure a reset, the external signal should be held low for one SYSCLK cycle. Signals of less than one SYSCLK can generate a reset. See the *TMS370 Family User's Guide* (literature number SPNU127) for more information.
- Watchdog (WD) timer. A watchdog-generated reset occurs if an improper value is written to the WD key register, or if the re-initialization does not occur before the watchdog timer times out . See the *TMS370 Family User's Guide* (literature number SPNU127) for more information.
- Oscillator reset. Reset occurs when the oscillator operates outside the recommended operating range. See the *TMS370 Family User's Guide* (literature number SPNU127) for more information.

Once a reset source is activated, the external $\overline{\text{RESET}}$ pin is driven (active) low for a minimum of eight SYSCLK cycles. This allows the 'x0x device to reset external system components. Additionally, if a cold start (V_{CC} is off for several hundred milliseconds) condition or oscillator failure occurs or the $\overline{\text{RESET}}$ pin is held low, then the reset logic holds the device in a reset state for as long as these actions are active.

After a reset, the program can check the oscillator fault flag (OSC FLT FLAG, SCCR0.4), the cold start flag (COLD START, SCCR0.7), and the watchdog reset (WD OVRFL INT FLAG, T1CTL2.5) to determine the source of the reset. A reset does not clear these flags. Table 6 lists the reset sources.

system reset (continued)

Table 6. Reset Sources

REGISTER	ADDRESS	PF	BIT NO.	CONTROL BIT	SOURCE OF RESET
SCCR0	1010h	P010	7	COLD START	Cold (power-up)
SCCR0	1010h	P010	4	OSC FLT FLAG	Oscillator out of range
T1CTL2	104Ah	P04A	5	WD OVRFL INT FLAG	Watchdog timer timeout

Once a reset is activated, the following sequence of events occurs:

1. The CPU registers are initialized: ST = 00h, SP = 01h (reset state).
2. Registers A and B are initialized to 00h (no other RAM is changed).
3. The contents of the LSbyte of the reset vector (07FFh) are read and stored in the PCL.
4. The contents of the MSbyte of the reset vector (07FEh) are read and stored in the PCH.
5. Program execution begins with an opcode fetch from the address pointed to the PC.

The reset sequence takes 20 SYSCLK cycles from the time the reset pulse is released until the first opcode fetch. During a reset, RAM contents (except for registers A and B) remain unchanged, and the module control register bits are initialized to their reset state.

interrupts

The TMS370 family software programmable interrupt structure permits flexible on-chip and external interrupt configurations to meet real-time interrupt-driven application requirements. The hardware interrupt structure incorporates two priority levels as shown in Figure 4. Interrupt level 1 has a higher priority than interrupt level 2. The two priority levels can be masked independently by the global-interrupt mask bits (IE1 and IE2) of the status register.

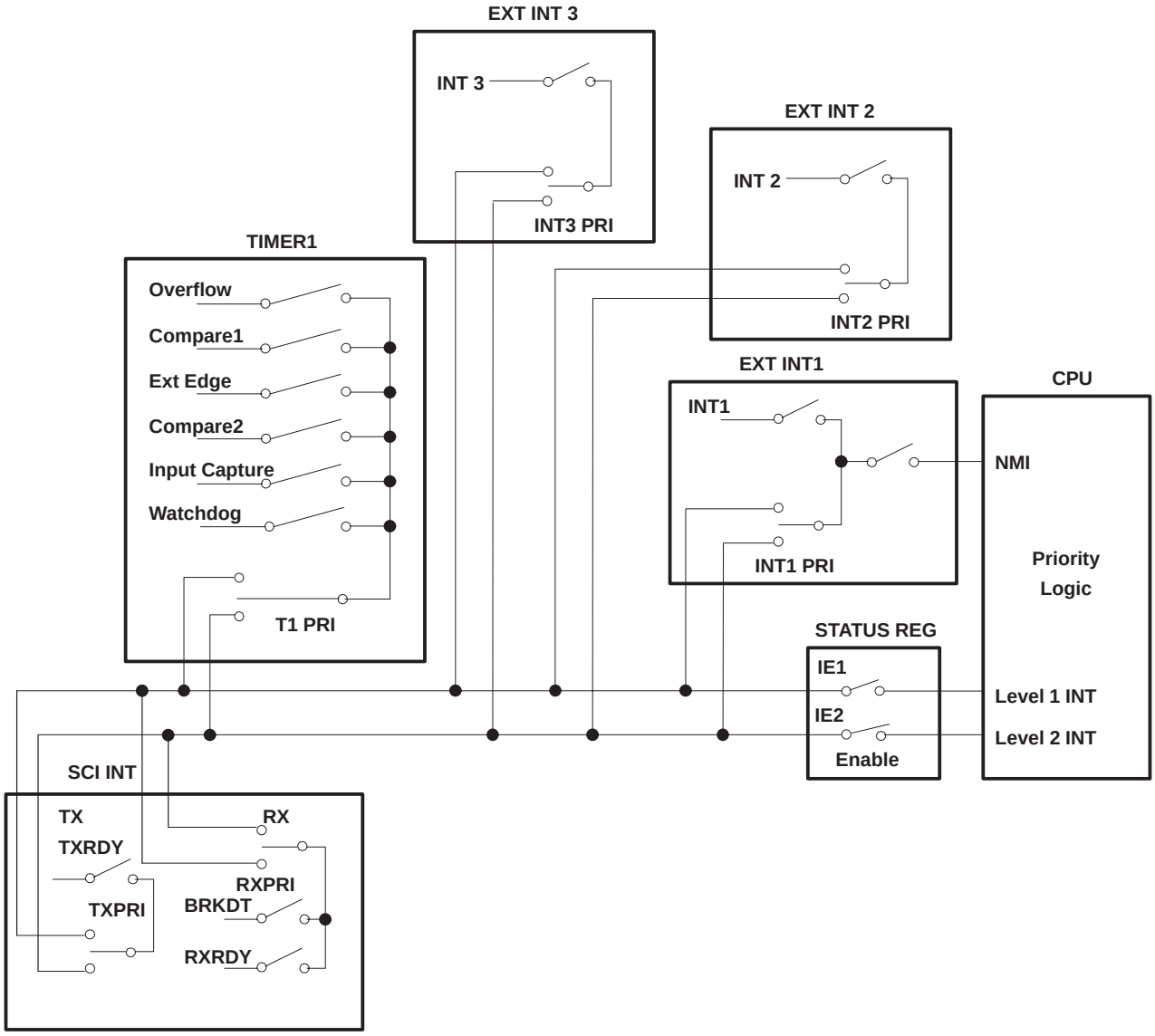

Figure 4. Interrupt Control

Each system interrupt is configured independently to either the high- or low-priority chain by the application program during system initialization. Within each interrupt chain, the interrupt priority is fixed by the position of the system interrupt. However, since each system interrupt is configured selectively on either the high- or low-priority interrupt chain, the application program can elevate any system interrupt to the highest priority. Arbitration between the two priority levels is performed within the CPU. Arbitration within each of the priority

interrupts (continued)

chains is performed within the peripheral modules to support interrupt expansion for future modules. Pending-interrupts are serviced upon completion of current instruction execution, depending on their interrupt mask and priority conditions.

The TMS370Cx0x has six hardware system interrupts (plus $\overline{\text{RESET}}$) as shown in Table 7. Each system interrupt has a dedicated vector located in program memory through which control is passed to the interrupt service routines. A system interrupt can have multiple interrupt sources. All of the interrupt sources are individually maskable by local interrupt enable control bits in the associated peripheral file. Each interrupt source FLAG bit is individually readable for software polling or for determining which interrupt source generated the associated system interrupt.

Three of the system interrupts are generated by on-chip peripheral functions, and three external interrupts are supported. Software configuration of the external interrupts is performed through the INT1, INT2, and INT3 control registers in peripheral file frame 1. Each external interrupt is individually software configurable for input polarity (rising or falling edge) for ease of system interface. External interrupt INT1 is software configurable as either a maskable or non-maskable interrupt. When INT1 is configured as non-maskable, it cannot be masked by the individual- or global-enable-mask bits. The INT1 NMI bit is protected during non-privileged operation and, therefore, should be configured during the initialization sequence following reset. To maximize pin flexibility, external interrupts INT2 and INT3 can be software-configured as general-purpose input/output pins if the interrupt function is not required (INT1 can be similarly configured as an input pin).

Table 7. Hardware System Interrupts

INTERRUPT SOURCE	INTERRUPT FLAG	SYSTEM INTERRUPT	VECTOR ADDRESS	PRIORITY†
External $\overline{\text{RESET}}$ Watchdog Overflow Oscillator Fault Detect	COLD START WD OVRFL INT FLAG OSC FLT FLAG	$\overline{\text{RESET}}$‡	7FFEh, 7FFFh	1
External INT1	INT1 FLAG	INT1‡	7FFCh, 7FFDh	2
External INT2	INT2 FLAG	INT2‡	7FFAh, 7FFBh	3
External INT3	INT3 FLAG	INT3‡	7FF8h, 7FF9h	4
Timer 1 Overflow Timer 1 Compare 1 Timer 1 Compare 2 Timer 1 External Edge Timer 1 Input Capture 1 Watchdog Overflow	T1 OVRFL INT FLAG T1C1 INT FLAG T1C2 INT FLAG T1EDGE INT FLAG T1IC1 INT FLAG WD OVRFL INT FLAG	T1INT§	7FF4h, 7FF5h	5
SCI RX Data Register Full SCI RX Break Detect	RXRDY FLAG BRKDT FLAG	RXINT‡	7FF2h, 7FF3h	6
SCI TX Data Register Empty	TXRDY FLAG	TXINT	7FF0h, 7FF1h	7

† Relative priority within an interrupt level
‡ Release microcontroller from STANDBY and HALT low-power modes.
§ Release microcontroller from STANDBY low-power mode.

privileged operation and EEPROM write protection override

The TMS370Cx0x family has significant flexibility to enable the designer to software configure the system and peripherals to meet the requirements of a variety of applications. The nonprivileged mode of operation ensures the integrity of the system configuration, once it is defined for an application. Following a hardware reset, the TMS370Cx0x operates in the privileged mode, where all peripheral file registers have unrestricted read/write access, and the application program configures the system during the initialization sequence following reset. As the last step of system initialization, the PRIVILEGE DISABLE bit (SCCR2.0) is set to 1 to enter the

privileged operation and EEPROM WPO (continued)

nonprivileged mode, thus disabling write operations to specific configuration control bits within the peripheral file. Table 8 lists the system configuration bits which are write-protected during the nonprivileged mode and must be configured by software prior to exiting the privileged mode.

Table 8. Privileged Bits

REGISTER†		CONTROL BIT
NAME	LOCATION	
SCCR0	P010.5 P010.6	PF AUTO WAIT OSC POWER
SCCR1	P011.2 P011.4	MEMORY DISABLE AUTOWAIT DISABLE
SCCR2	P012.0 P012.1 P012.3 P012.4 P012.6 P012.7	PRIVILEGE DISABLE INT1 NMI CPU STEST BUS STEST PWRDWN/IDLE HALT/STANDBY
SCIPRI	P05F.4 P05F.5 P05F.6 P05F.7	SCI ESPEN SCIRX PRIORITY SCITX PRIORITY SCI STEST
T1PRI	P04F.6 P04F.7	T1 PRIORITY T1 STEST

† The privileged bits are shown in a bold typeface in Table 10.

The write protect override (WPO) mode is an external hardware method of overriding the write protection registers (WPR) of data EEPROM on the TMS370Cx0x. WPO mode is entered by applying a 12-V input to the MC pin after the $\overline{\text{RESET}}$ pin input goes high (logic 1). The high voltage (+ 12 V) on the MC pin during the WPO mode is not the programming voltage for the data EEPROM or program EPROM. All EEPROM programming voltages are generated on-chip. The WPO mode provides hardware system level capability to modify the content of data EEPROM while the device remains in the application but only while requiring a 12-V external input on the MC pin (normally not available in the end application except in a service or diagnostic environment).

low-power and IDLE modes

The TMS370Cx0x devices have two low-power modes (STANDBY and HALT) and an IDLE mode. For mask-ROM devices, low-power modes can be disabled permanently through a programmable contact at the time the mask is manufactured.

The STANDBY and HALT low-power modes significantly reduce power consumption by reducing or stopping the activity of the various on-chip peripherals when processing is not required. Each of the low-power modes is entered by executing the IDLE instruction when the PWRDWN/IDLE bit in SCCR2 has been set to 1. The HALT/STANDBY bit in SCCR2 controls the low-power mode selection.

In the STANDBY mode (HALT/STANDBY = 0), all CPU activity and most peripheral module activity stops; however, the oscillator, internal clocks, timer 1 and the receive-start bit detection circuit of the serial communications interface remain active. System processing is suspended until a qualified interrupt (hardware $\overline{\text{RESET}}$, external interrupt on INT1, INT2, INT3, timer 1 interrupt, or low level on the receive pin of the SCI1) is detected.

low-power and IDLE modes (continued)

In the HALT mode (HALT/STANDBY = 1), the TMS370Cx0x is placed in its lowest power-consumption mode. The oscillator and internal clocks are stopped, causing all internal activity to be halted. System activity is suspended until a qualified interrupt (hardware $\overline{\text{RESET}}$, external interrupt on the INT1, INT2, INT3, or low level on the receive pin of the SCI1) is detected. The power-down mode selection bits are summarized in Table 9.

Table 9. Low-Power/Idle Control Bits

POWER-DOWN CONTROL BITS		MODE SELECTED
PWRDWN/IDLE (SCCR2.6)	HALT/STANDBY (SCCR2.7)	
1	0	STANDBY
1	1	HALT
0	X †	IDLE

† Don't care

When low-power modes are disabled through a programmable contact in the mask-ROM devices, writing to the SCCR2.6-7 bits are ignored. In addition, if an idle instruction executes when low-power modes are disabled through a programmable contact, the device always enters the IDLE mode.

To provide a method of always exiting low-power modes for mask-ROM devices, INT1 is enabled automatically as a nonmaskable interrupt (NMI) during low-power modes when the hard watchdog mode is selected. This means that the NMI is generated always, regardless of the interrupt enable flags.

The following information is preserved throughout both the STANDBY and HALT modes: RAM (register file), CPU registers (stack pointer, program counter, and status register), I/O pin direction and output data, and status registers of all on-chip peripheral functions. Since all CPU instruction processing stops during the STANDBY and HALT modes, the clocking of the watchdog timer is inhibited.

clock modules

The 'x0x family provides two clock options that are referred to as divide-by-1 (phase-locked loop) and divide-by-4 (standard oscillator). Both the divide-by-1 and divide-by-4 options are configurable during the manufacturing process of a TMS370 microcontroller. The 'x0x ROM-masked devices offer both options to meet system engineering requirements. Only one of the two clock options is allowed on each ROM device. The '702A EPROM has only the divide-by-4.

The divide-by-1 clock module option provides the capability for reduced electromagnetic interference (EMI) with no added cost.

The divide-by-1 clock module option provides a one-to-one match of the external resonator frequency (CLKIN) to the internal system clock (SYSCLK) frequency, whereas the divide-by-4 option produces a SYSCLK which is one-fourth of the frequency of the external resonator. Inside of the divide-by-1 module, the frequency of the external resonator is multiplied by four, and the clock module then divides the resulting signal by four to provide the four-phased internal system clock signals. The resulting SYSCLK is equal to the resonator frequency.

clock modules (continued)

These are formulated as follows:

$$\text{Divide-by-4}: \text{SYSCLK} = \frac{\text{external resonator frequency}}{4} = \frac{\text{CLKIN}}{4}$$

$$\text{Divide-by-1}: \text{SYSCLK} = \frac{\text{external resonator frequency} \times 4}{4} = \text{CLKIN}$$

The main advantage of choosing a divide-by-1 oscillator is the improved EMI performance. The harmonics of low-speed resonators extend through less of the emissions spectrum than the harmonics of faster resonators. The divide-by-1 option provides the capability of reducing the resonator speed by four times, resulting in a steeper decay of emissions produced by the oscillator.

system configuration registers

Table 10 contains system configuration and control functions and registers for controlling EEPROM programming. The privileged bits are shown in a bold typeface and shaded areas.

Table 10. Peripheral File Frame 1: System Configuration Registers

PF	BIT 7	BIT 6	BIT 5	BIT 4	BIT 3	BIT 2	BIT 1	BIT 0	REG
P010	COLD START	**OSC POWER**	**PF AUTO WAIT**	OSC FLT FLAG	MC PIN WPO	MC PIN DATA	—	µP/µC MODE	SCCR0
P011	—	—	—	**AUTO WAIT DISABLE**	—	**MEMORY DISABLE**	—	—	SCCR1
P012	**HALT/ STANDBY**	**PWRDWN/ IDLE**	—	**BUS STEST**	**CPU STEST**	—	**INT1 NMI**	**PRIVILEGE DISABLE**	SCCR2
P013 to P016	Reserved								
P017	INT1 FLAG	INT1 PIN DATA	—	—	—	INT1 POLARITY	INT1 PRIORITY	INT1 ENABLE	INT1
P018	INT2 FLAG	INT2 PIN DATA	—	INT2 DATA DIR	INT2 DATA OUT	INT2 POLARITY	INT2 PRIORITY	INT2 ENABLE	INT2
P019	INT3 FLAG	INT3 PIN DATA	—	INT3 DATA DIR	INT3 DATA OUT	INT3 POLARITY	INT3 PRIORITY	INT3 ENABLE	INT3
P01A	BUSY	—	—	—	—	AP	W1W0	EXE	DEECTL
P01B	Reserved								
P01C	BUSY	VPPS	—	—	—	—	W0	EXE	EPCTL
P01D P01E P01F	Reserved								

digital port control registers

Peripheral file frame 2 contains the digital I/O pin configuration and control registers. Table 11 shows the specific addresses, registers, and control bits within this peripheral file frame.

Table 11. Peripheral File Frame 2: Digital Port Control Registers

PF	BIT 7	BIT 6	BIT 5	BIT 4	BIT 3	BIT 2	BIT 1	BIT 0	REG
P020	Reserved								APORT1
P021	Port A Control Register 2 (must be 0)								APORT2
P022	Port A Data								ADATA
P023	Port A Direction								ADIR
P024 to P02B	Reserved								
P02C	Port D Control Register 1 (must be 0)					—	—	—	DPORT1
P02D	Port D Control Register 2 (must be 0)†					—	—	—	DPORT2
P02E	Port D Data					—	—	—	DDATA
P02F	Port D Direction					—	—	—	DDIR

† To configure pin D3 as SYSCLK, set port D control register 2 = 08h.

Table 12. Port Configuration Register Setup

PORT	PIN	abcd 00q1	abcd 00y0
A	0 – 7	Data OUT q	Data In y
D	3 – 7	Data OUT q	Data In y
a = Port x Control Register 1 b = Port x Control Register 2 c = Data d = Direction			

programmable timer 1

The programmable Timer 1 (T1) module of the TMS370Cx0x provides the designer with the enhanced timer resources required to perform real-time system control. The T1 module contains the general-purpose timer and the watchdog (WD) timer. The two independent 16-bit timers (T1 and WD) allow program selection of input clock sources (real-time, external event, or pulse accumulate) with multiple 16-bit registers (input capture and compare) for special timer function control. The timer 1 module includes three external device pins that can be used for multiple counter functions (operation mode dependent) or used as general-purpose I/O pins. The T1 module block diagram is shown in Figure 5.

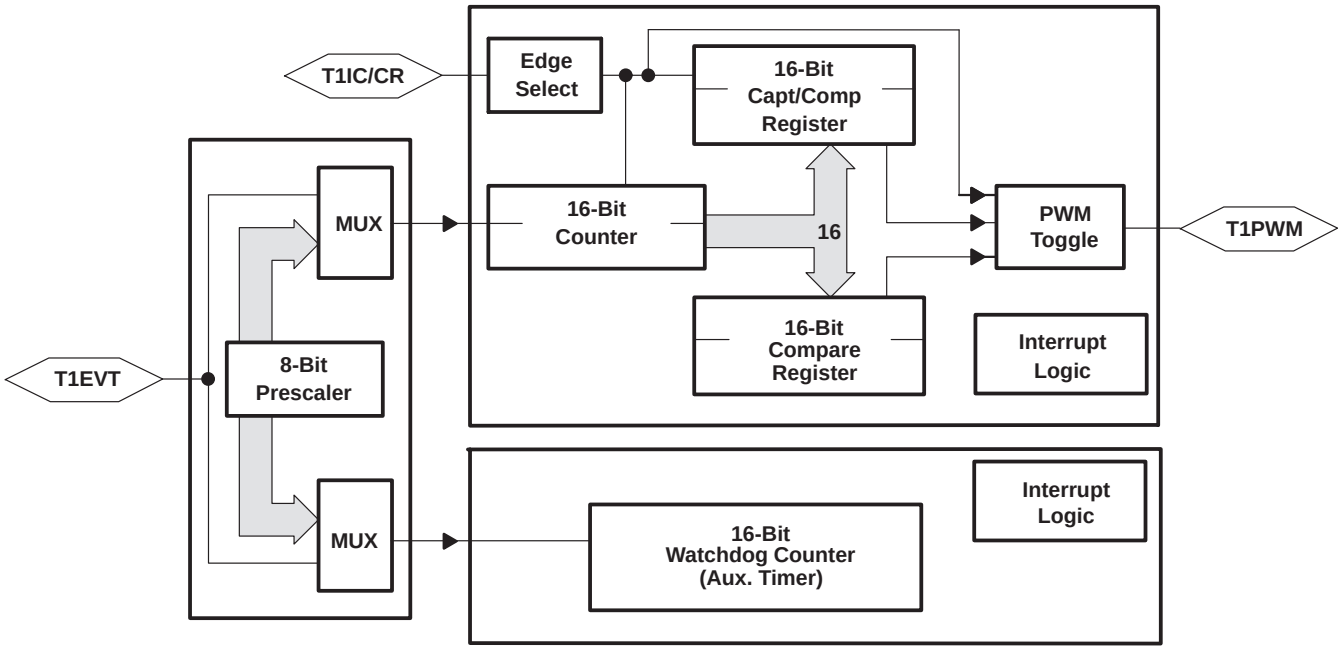

Figure 5. Timer 1 Block Diagram

- Three T1 I/O pins
  - T1IC/CR: Timer 1 input capture / counter reset input pin, or general-purpose bidirectional I/O pin
  - T1PWM: Timer 1 pulse-width-modulation (PWM) output pin, or general-purpose bidirectional I/O pin
  - T1EVT: Timer 1 event input pin, or general-purpose bidirectional I/O pin
- Two operation modes:
  - Dual-compare mode: Provides PWM signal
  - Capture/compare mode: Provides input capture pin
- One 16-bit general-purpose resettable counter
- One 16-bit compare register with associated compare logic
- One 16-bit capture/compare register, which, depending on the mode of operation, operates as either a capture or compare register.
- One 16-bit watchdog counter can be used as an event counter, a pulse accumulator, or an interval timer if watchdog feature is not needed.
- Prescaler/clock sources that determine one of eight clock sources for general-purpose timer

programmable timer 1 (continued)

- Selectable edge-detection circuitry that, depending on the mode of operation, senses active transitions on the input capture pins (T1IC1/CR)
- Interrupts that can be generated on the occurrence of:
  - A capture
  - A compare equal
  - A counter overflow
  - An external edge detection
- Sixteen timer 1 module control registers located in the PF frame beginning at address P040.

The T1 module control registers are illustrated in Table 13.

programmable timer 1 (continued)

Table 13. Timer 1 Module Register Memory Map

PF	BIT 7	BIT 6	BIT 5	BIT 4	BIT 3	BIT 2	BIT 1	BIT 0	REG
	Modes: Dual-Compare and Capture / Compare								
P040	Bit 15			T1Counter MSbyte				Bit 8	T1CNTR
P041	Bit 7			T1 Counter LSbyte				Bit 0	
P042	Bit 15			Compare Register MSbyte				Bit 8	T1C
P043	Bit 7			Compare Register LSbyte				Bit 0	
P044	Bit 15			Capture/Compare Register MSbyte				Bit 8	T1CC
P045	Bit 7			Capture/Compare Register LSbyte				Bit 0	
P046	Bit 15			Watchdog Counter MSbyte				Bit 8	WDCNTR
P047	Bit 7			Watchdog Counter LSbyte				Bit 0	
P048	Bit 7			Watchdog Reset Key				Bit 0	WDRST
P049	WD OVRFL TAP SEL†	WD INPUT SELECT2†	WD INPUT SELECT1†	WD INPUT SELECT0†	—	T1 INPUT SELECT2	T1 INPUT SELECT1	T1 INPUT SELECT0	T1CTL1
P04A	WD OVRFL RST ENA†	WD OVRFL INT ENA	WD OVRFL INT FLAG	T1 OVRFL INT ENA	T1 OVRFL INT FLAG	—	—	T1 SW RESET	T1CTL2
	Mode: Dual-Compare								
P04B	T1EDGE INT FLAG	T1C2 INT FLAG	T1C1 INT FLAG	—	—	T1EDGE INT ENA	T1C2 INT ENA	T1C1 INT ENA	T1CTL3
P04C	T1 MODE=0	T1C1 OUT ENA	T1C2 OUT ENA	T1C1 RST ENA	T1CR OUT ENA	T1EDGE POLARITY	T1CR RST ENA	T1EDGE DET ENA	T1CTL4
	Mode: Capture / Compare								
P04B	T1EDGE INT FLAG	—	T1C1 INT FLAG	—	—	T1EDGE INT ENA	—	T1C1 INT ENA	T1CTL3
P04C	T1 MODE = 1	T1C1 OUT ENA	—	T1C1 RST ENA	—	T1EDGE POLARITY	—	T1EDGE DET ENA	T1CTL4
	Modes: Dual-Compare and Capture / Compare								
P04D	—	—	—	—	T1EVT DATA IN	T1EVT DATA OUT	T1EVT FUNCTION	T1EVT DATA DIR	T1PC1
P04E	T1PWM DATA IN	T1PWM DATA OUT	T1PWM FUNCTION	T1PWM DATA DIR	T1IC/CR DATA IN	T1IC/CR DATA OUT	T1IC/CR FUNCTION	T1IC/CR DATA DIR	T1PC2
P04F	**T1 STEST**	**T1 PRIORITY**	—	—	—	—	—	—	T1PRI

† Once the WD OVRFL RST ENA bit is set, these bits cannot be changed until a reset; this applies only to the standard watchdog and to the simple counter. In the hard watchdog, these bits can be modified at any time; the WD INPUT SELECT2 bits are ignored.

programmable timer 1 (continued)

Figure 6 shows the timer 1 capture/compare mode block diagram. The annotations on the diagram identify the register and the bit(s) in the peripheral frame. For example, the actual address of T1CTL2.0 is 104Ah, bit 0, in the T1CTL2 register.

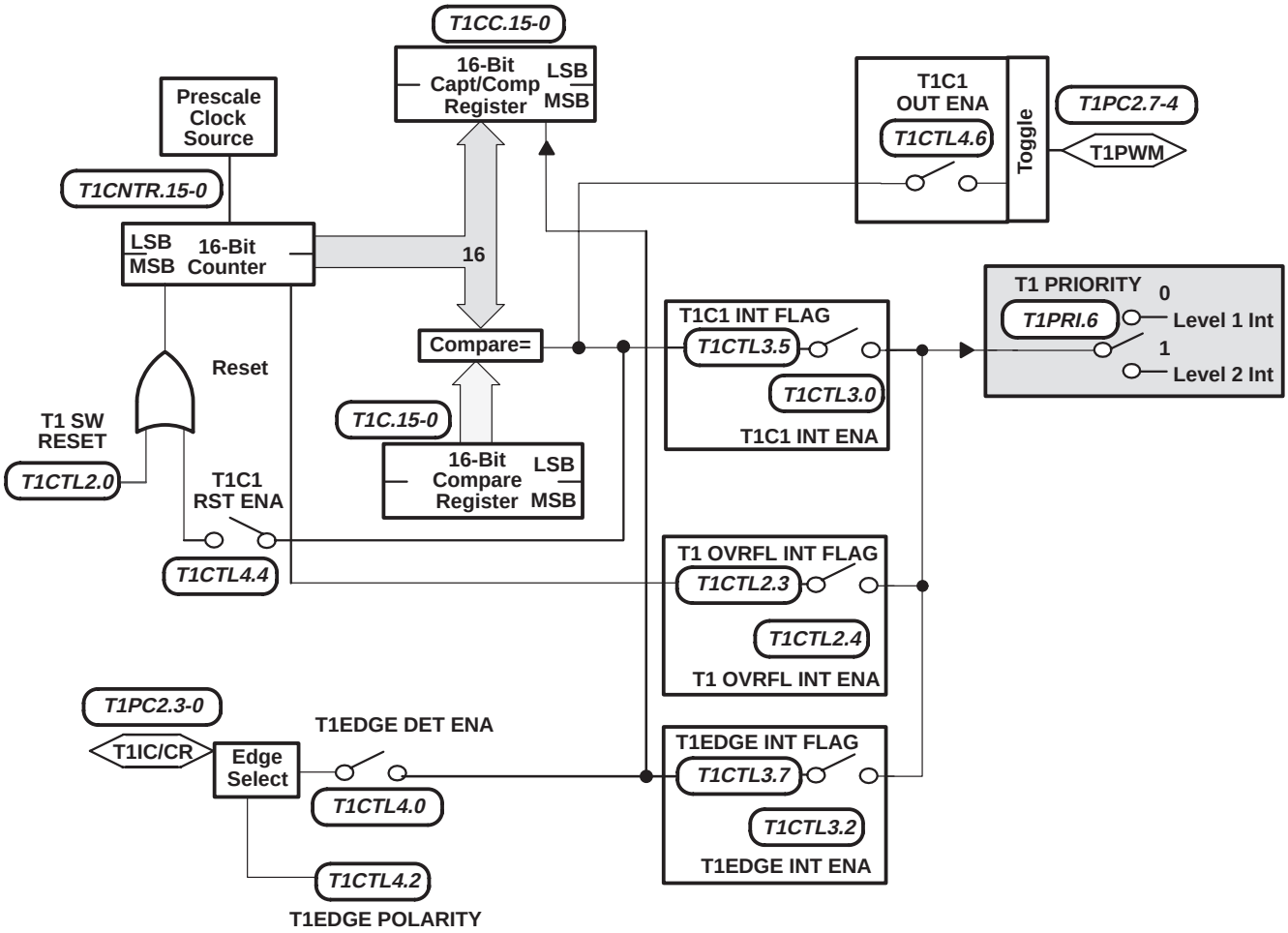

Figure 6. Capture/Compare Mode

programmable timer 1 (continued)

Figure 7 shows the timer 1 dual-compare mode block diagram. The annotations on the diagram identify the register and the bit(s) in the peripheral frame. For example, the actual address of T1CTL2.0 is 104Ah, bit 0, in the T1CTL2 register.

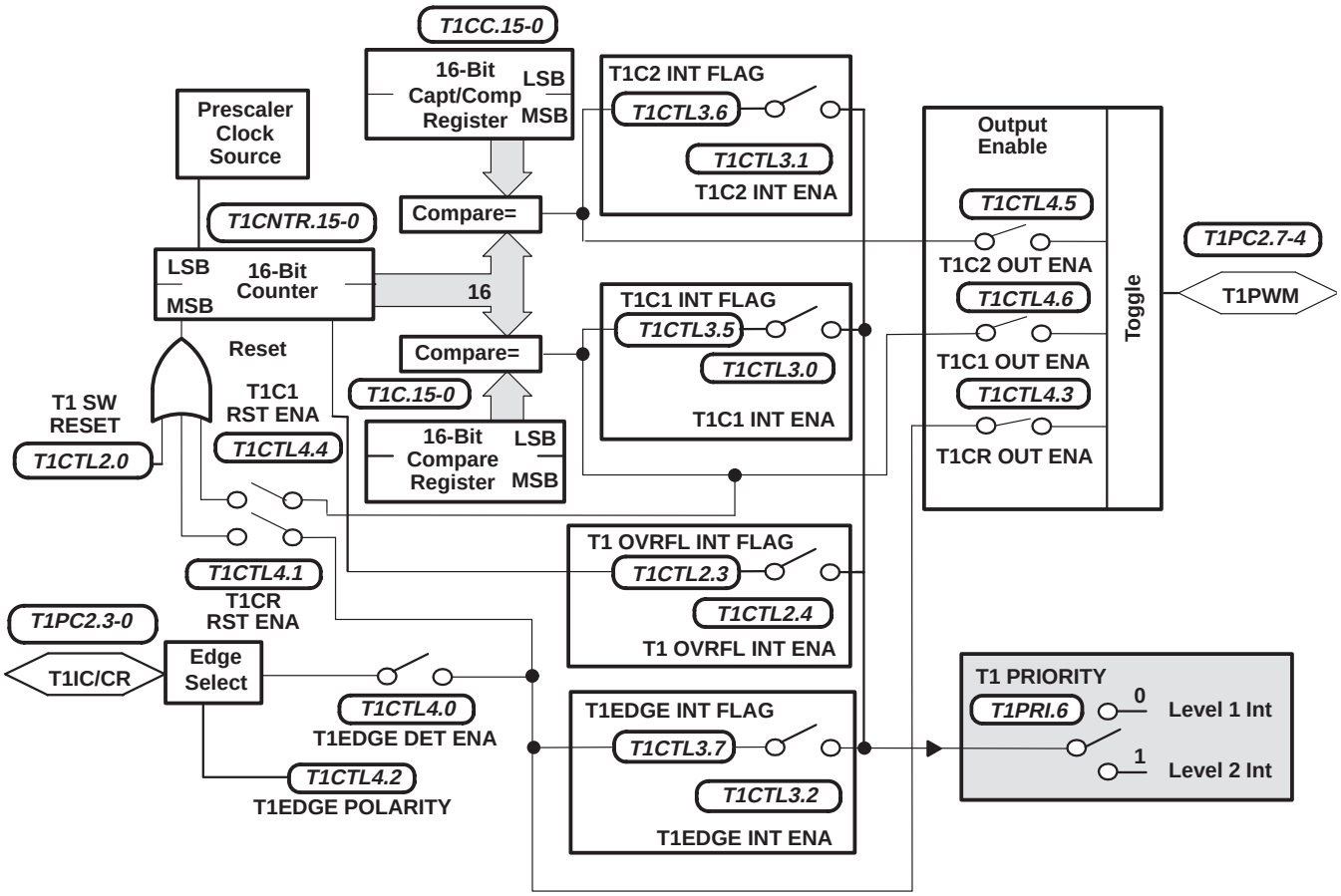

Figure 7. Dual-Compare Mode

programmable timer 1 (continued)

The TMS370Cx0x device includes a 24-bit watchdog (WD) timer, contained in the timer 1 module, which can be programmed as an event counter, pulse accumulator, or interval timer if the watchdog function is not used. The WD function is to monitor software and hardware operation and to implement a system reset when the WD counter is not properly serviced (WD counter overflow or WD counter is re-initialized by an incorrect value). The WD can be configured as one of three mask options as follows:

- Standard watchdog configuration (see Figure 8) – for EPROM and mask-ROM devices:
  - Watchdog mode
    - Ten different WD overflow rates ranging from 6.55 ms to 3.35 s at 5-MHz SYSCLK
    - A WD reset key (WDRST) register is used to clear the watchdog counter (WDCNTR) when a correct value is written.
    - Generates a system reset if an incorrect value is written to the watchdog reset key or if the counter overflows
    - A watchdog overflow flag (WD OVRFL INT FLAG) bit that indicates whether the WD timer initiated a system reset
  - Non-watchdog mode
    - Watchdog timer can be configured as an event counter, a pulse accumulator, or an interval timer

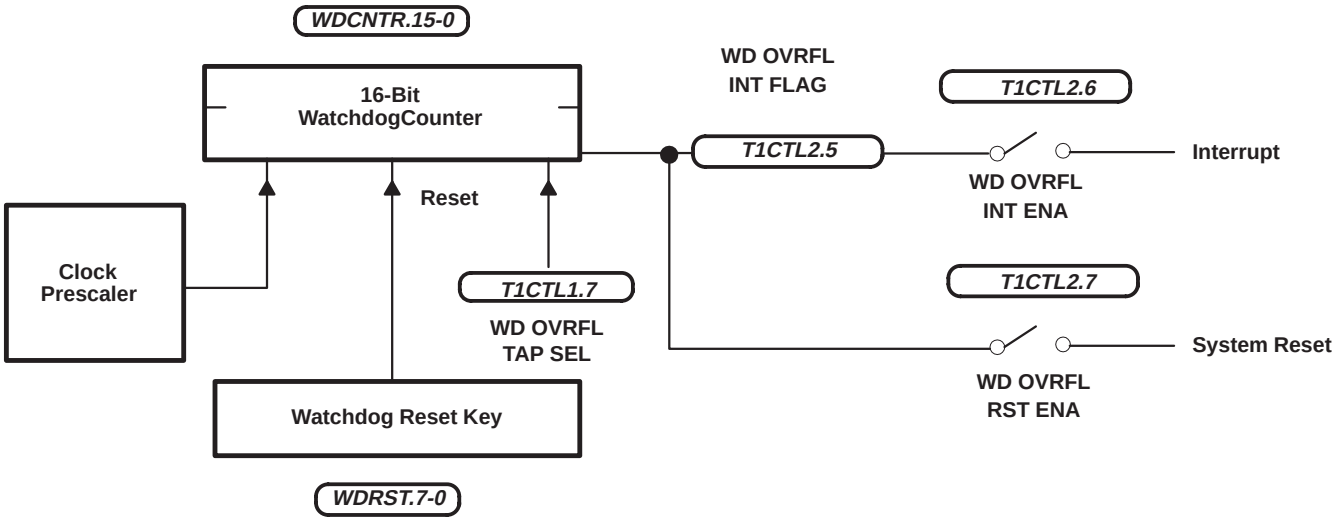

Figure 8. Standard watchdog

programmable timer 1 (continued)

- Hard watchdog configuration (see Figure 9) – for mask-ROM devices:
  - Eight different WD overflow rates ranging from 26.2 ms to 3.35 s at 5-MHz SYSCLK
  - A WD reset key (WDRST) register is used to clear the watchdog counter (WDCNTR) when a correct value is written.
  - Generates a system reset if an incorrect value is written to the watchdog reset key or if the counter overflows.
  - Automatic activation of the WD timer upon power-up reset
  - INT1 is enabled as a nonmaskable interrupt during low-power modes.
  - A watchdog overflow flag (WD OVRFL INT FLAG) bit that indicates whether the WD timer initiated a system reset

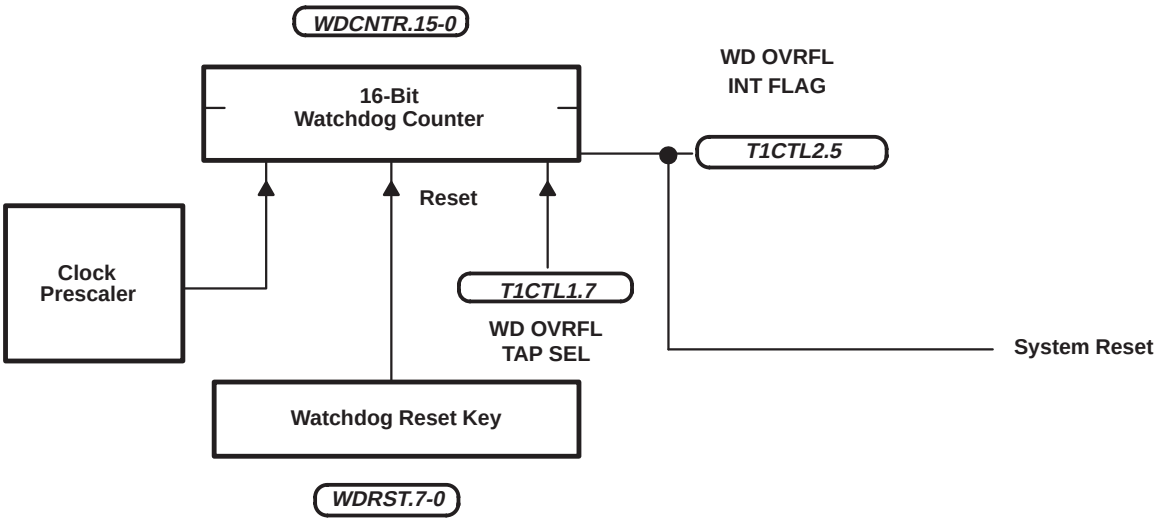

Figure 9. Hard Watchdog

- Simple counter configuration – for mask-ROM devices only (see Figure 10)
  - Simple counter can be configured as an event counter, pulse accumulator, or an internal timer.

programmable timer 1 (continued)

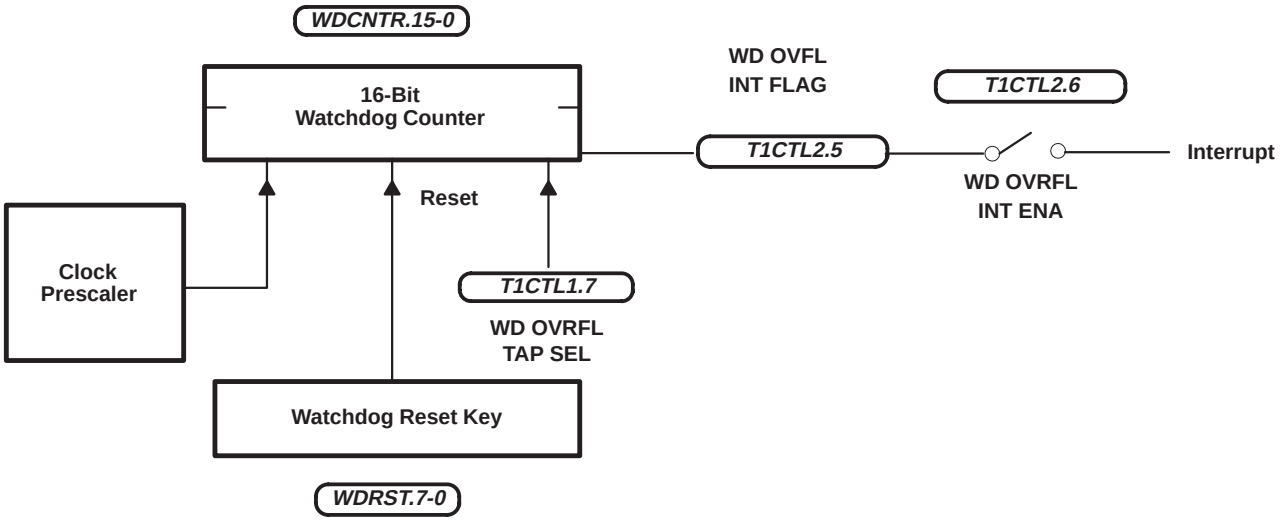

Figure 10. Simple Counter

serial communications interface 1 (SCI1) module

The TMS370Cx0x devices include a serial communications interface 1 (SCI1) module. The SCI1 module supports digital communications between the TMS370 devices and other asynchronous peripherals and uses the standard non-return-zero format (NRZ) format. The SCI1's receiver and transmitter are double buffered, and each has its own separate enable and interrupt bits. Both can be operated independently or simultaneously in the full duplex mode. To ensure data integrity, the SCI1 checks received data for break detection, parity, overrun, and framing errors. The speed of bit rate (baud) is programmable to over 65,000 different speeds through a 16-bit baud-select register.

Features of the SCI1 module include:

- Three external pins:
  - SCITXD: SCI transmit-output pin or general-purpose bidirectional I/O pin
  - SCIRXD: SCI receive-input pin or general-purpose bidirectional I/O pin
  - SCICLK: SCI bidirectional serial-clock pin, or general-purpose bidirectional I/O pin
- Two communications modes: asynchronous and isosynchronous†
- Baud rate: 64K different programmable rates
  - Asynchronous mode: 3 bps to 156K bps at 5-MHz SYSCLK

$$\text{ASYNCHRONOUS BAUD} = \frac{\text{SYSCLK}}{(\text{BAUD REG} + 1) \times 32}$$

  - Isosynchronous mode: 39 bps to 2.5M bps at 5-MHz SYSCLK

$$\text{ISOSYNCHRONOUS BAUD} = \frac{\text{SYSCLK}}{(\text{BAUD REG} + 1) \times 2}$$

† Isosynchronous = Isochronous

serial communications interface 1 (SCI1) module (continued)

- Data word format:
  - One start bit
  - Data word length programmable from one to eight bits
  - Optional even/odd/no parity bit
  - One or two stop bits
- Four error-detection flags: parity, overrun, framing, and break detection
- Two wake-up multiprocessor modes: Idle-line and address bit
- Half or full-duplex operation
- Double-buffered receiver and transmitter operations
- Transmitter and receiver operations can be accomplished through either interrupt-driven or polled-algorithms with status flags:
  - Transmitter: TXRDY flag (transmitter buffer register is ready to receive another character) and TX EMPTY flag (Transmitter shift register is empty)
  - Receiver: RXRDY flag (receive buffer register ready to receive another character), BRKDT flag (break condition occurred), and RX ERROR monitoring four interrupt conditions
  - Separate enable bits for transmitter and receiver interrupts
  - NRZ (non return-to-zero) format
- Eleven SCI1 module control registers, located in control register frame beginning at address P050h

serial communications interface 1 (SCI1) module (continued)

The SCI1 module control registers are illustrated in Table 14.

Table 14. SCI1 Module Control Register Memory Map

PF	BIT 7	BIT 6	BIT 5	BIT 4	BIT 3	BIT 2	BIT 1	BIT 0	REG
P050	STOP BITS	EVEN/ODD PARITY	PARITY ENABLE	ASYNC/ ISOSYNC	ADDRESS/ IDLE WUP	SCI CHAR2	SCI CHAR1	SCI CHAR0	SCICCR
P051	—	—	SCI SW RESET	CLOCK	TXWAKE	SLEEP	TXENA	RXENA	SCICTL
P052	BAUDF (MSB)	BAUDE	BAUDD	BAUDC	BAUDB	BAUDA	BAUD9	BAUD8	BAUD MSB
P053	BAUD7	BAUD6	BAUD5	BAUD4	BAUD3	BAUD2	BAUD1	BAUD0 (LSB)	BAUD LSB
P054	TXRDY	TX EMPTY	—	—	—	—	—	SCI TX INT ENA	TXCTL
P055	RX ERROR	RXRDY	BRKDT	FE	OE	PE	RXWAKE	SCI RX INT ENA	RXCTL
P056	Reserved								
P057	RXDT7	RXDT6	RXDT5	RXDT4	RXDT3	RXDT2	RXDT1	RXDT0	RXBUF
P058	Reserved								
P059	TXDT7	TXDT6	TXDT5	TXDT4	TXDT3	TXDT2	TXDT1	TXDT0	TXBUF
P05A P05B P05C	Reserved								
P05D	—	—	—	—	SCICLK DATA IN	SCICLK DATA OUT	SCICLK FUNCTION	SCICLK DATA DIR	SCIPC1
P05E	SCITXD DATA IN	SCITXD DATA OUT	SCITXD FUNCTION	SCITXD DATA DIR	SCIRXD DATA IN	SCIRXD DATA OUT	SCIRXD FUNCTION	SCIRXD DATA DIR	SCIPC2
P05F	**SCI STEST**	**SCITX PRIORITY**	**SCIRX PRIORITY**	**SCI ESPEN**	—	—	—	—	SCIPRI

serial communications interface 1 (SCI1) module (continued)

The SCI1 module block diagram is illustrated in Figure 11.

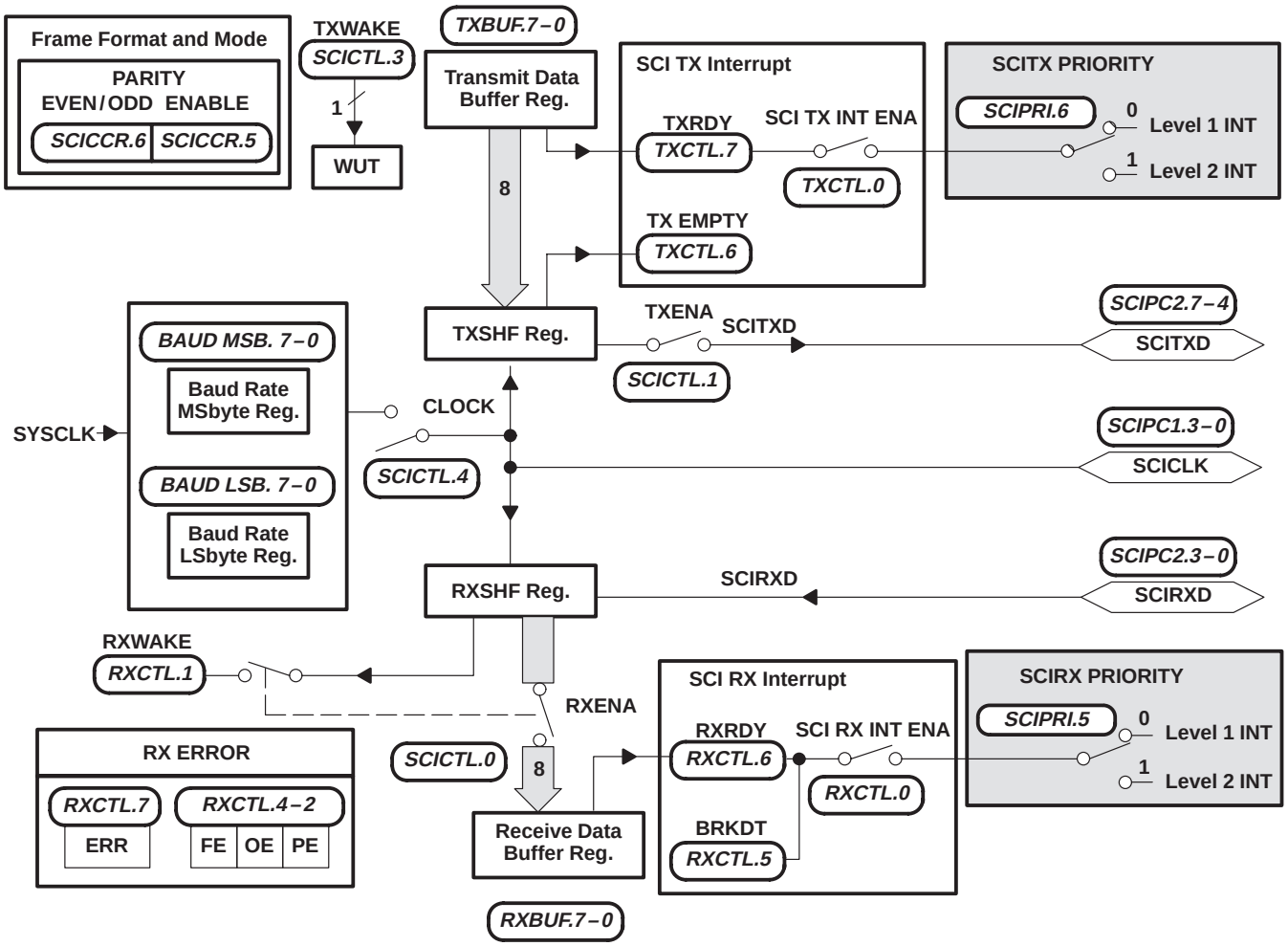

Figure 11. SCI1 Block Diagram

instruction set overview

Table 15 provides an opcode-to-instruction cross-reference of all 73 instructions and 274 opcodes of the ‘370Cx0x instruction set. The numbers at the top of this table represent the most significant nibble of the opcode while the numbers at the left side of the table represent the least significant nibble. The instructions for these two opcode nibbles contain the mnemonic, operands, and byte/cycle particular to that opcode.

For example, the opcode B5h points to the CLR A instruction. This instruction contains one byte and executes in eight SYSCLK cycles.

Table 15. TMS370 Family Opcode/Instruction Map†

MSN

LSN	0	1	2	3	4	5	6	7	8	9	A	B	C	D	E	F
0	JMP #ra 2/7							INCW #ra,Rd 3/11	MOV Ps,A 2/8			CLRC / TST A 1/9	MOV A,B 1/9	MOV A,Rd 2/7	TRAP 15 1/14	LDST n 2/6
1	JN ra 2/5		MOV A,Pd 2/8			MOV B,Pd 2/8		MOV Rs,Pd 3/10		MOV Ps,B 2/7				MOV B,Rd 2/7	TRAP 14 1/14	MOV #ra[SP],A 2/7
2	JZ ra 2/5	MOV Rs,A 2/7	MOV #n,A 2/6	MOV Rs,B 2/7	MOV Rs,Rd 3/9	MOV #n,B 2/6	MOV B,A 1/8	MOV #n,Rd 3/8			MOV Ps,Rd 3/10	DEC A 1/8	DEC B 1/8	DEC Rd 2/6	TRAP 13 1/14	MOV A,*ra[SP] 2/7
3	JC ra 2/5	AND Rs,A 2/7	AND #n,A 2/6	AND Rs,B 2/7	AND Rs,Rd 3/9	AND #n,B 2/6	AND B,A 1/8	AND #n,Rd 3/8	AND A,Pd 2/9	AND B,Pd 2/9	AND #n,Pd 3/10	INC A 1/8	INC B 1/8	INC Rd 2/6	TRAP 12 1/14	CMP *n[SP],A 2/8
4	JP ra 2/5	OR Rs,A 2/7	OR #n,A 2/6	OR Rs,B 2/7	OR Rs,Rd 3/9	OR #n,B 2/6	OR B,A 1/8	OR #n,Rd 3/8	OR A,Pd 2/9	OR B,Pd 2/9	OR #n,Pd 3/10	INV A 1/8	INV B 1/8	INV Rd 2/6	TRAP 11 1/14	extend inst,2 opcodes
5	JPZ ra 2/5	XOR Rs,A 2/7	XOR #n,A 2/6	XOR Rs,B 2/7	XOR Rs,Rd 3/9	XOR #n,B 2/6	XOR B,A 1/8	XOR #n,Rd 3/8	XOR A,Pd 2/9	XOR B,Pd 2/9	XOR #n,Pd 3/10	CLR A 1/8	CLR B 1/8	CLR Rn 2/6	TRAP 10 1/14	
6	JNZ ra 2/5	BTJO Rs,A,ra 3/9	BTJO #n,A,ra 3/8	BTJO Rs,B,ra 3/9	BTJO Rs,Rd,ra 4/11	BTJO #n,B,ra 3/8	BTJO B,A,ra 2/10	BTJO #n,Rd,ra 4/10	BTJO A,Pd,ra 3/11	BTJO B,Pd,ra 3/10	BTJO #n,Pd,ra 4/11	XCHB A 1/10	XCHB A / TST B 1/10	XCHB Rn 2/8	TRAP 9 1/14	IDLE 1/6
7	JNC ra 2/5	BTJZ Rs.,A,ra 3/9	BTJZ #n,A,ra 3/8	BTJZ Rs,B,ra 3/9	BTJZ Rs,Rd,ra 4/11	BTJZ #n,B,ra 3/8	BTJZ B,A,ra 2/10	BTJZ #n,Rd,ra 4/10	BTJZ A,Pd,ra 3/10	BTJZ B,Pd,ra 3/10	BTJZ #n,Pd,ra 4/11	SWAP A 1/11	SWAP B 1/11	SWAP Rn 2/9	TRAP 8 1/14	MOV #n,Pd 3/10
8	JV ra 2/5	ADD Rs,A 2/7	ADD #n,A 2/6	ADD Rs,B 2/7	ADD Rs,Rd 3/9	ADD #n,B 2/6	ADD B,A 1/8	ADD #n,Rd 3/8	MOVW #16,Rd 4/13	MOVW Rs,Rd 3/12	MOVW #16[B],Rpd 4/15	PUSH A 1/9	PUSH B 1/9	PUSH Rd 2/7	TRAP 7 1/14	SETC 1/7
9	JL ra 2/5	ADC Rs,A 2/7	ADC #n,A 2/6	ADC Rs,B 2/7	ADC Rs,Rd 3/9	ADC #n,B 2/6	ADC B,A 1/8	ADC #n,Rd 3/8	JMPL lab 3/9	JMPL *Rp 2/8	JMPL *lab[B] 3/11	POP A 1/9	POP B 1/9	POP Rd 2/7	TRAP 6 1/14	RTS 1/9
A	JLE ra 2/5	SUB Rs,A 2/7	SUB #n,A 2/6	SUB Rs,B 2/7	SUB Rs,Rd 3/9	SUB #n,B 2/6	SUB B,A 1/8	SUB #n,Rd 3/8	MOV & lab,A 3/10	MOV *Rp,A 2/9	MOV *lab[B],A 3/12	DJNZ A,#ra 2/10	DJNZ B,#ra 2/10	DJNZ Rd,#ra 3/8	TRAP 5 1/14	RTI 1/12
B	JHS ra 2/5	SBB Rs,A 2/7	SBB #n,A 2/6	SBB Rs,B 2/7	SBB Rs,Rd 3/9	SBB #n,B 2/6	SBB B,A 1/8	SBB #n,Rd 3/8	MOV A, & lab 3/10	MOV A, *Rp 2/9	MOV A,*lab[B] 3/12	COMPL A 1/8	COMPL B 1/8	COMPL Rd 2/6	TRAP 4 1/14	PUSH ST 1/8

† All conditional jumps (opcodes 01–0F), BTJO, BTJZ, and DJNZ instructions use two additional cycles if the branch is taken. The BTJO, BTJZ, and DJNZ instructions have a relative address as the last operand.

Table 15. TMS370 Family Opcode/Instruction Map† (Continued)

MSN

LSN	0	1	2	3	4	5	6	7	8	9	A	B	C	D	E	F
C	JNV ra 2/5	MPY Rs,A 2/46	MPY #n,A 2/45	MPY Rs,B 2/46	MPY Rs,Rd 3/48	MPY #n,B 2/45	MPY B,A 1/47	MPY #n,Rs 3/47	BR lab 3/9	BR *Rp 2/8	BR *lab[B] 3/11	RR A 1/8	RR B 1/8	RR Rd 2/6	TRAP 3 1/14	POP ST 1/8
D	JGE ra 2/5	CMP Rs,A 2/7	CMP #n,A 2/6	CMP Rs,B 2/7	CMP Rs,Rd 3/9	CMP #n,B 2/6	CMP B,A 1/8	CMP #n,Rd 3/8	CMP & lab,A 3/11	CMP *Rp,A 2/10	CMP *lab[B],A 3/13	RRC A 1/8	RRC B 1/8	RRC Rd 2/6	TRAP 2 1/14	LDSP 1/7
E	JG ra 2/5	DAC Rs,A 2/9	DAC #n,A 2/8	DAC Rs,B 2/9	DAC Rs,Rd 3/11	DAC #n,B 2/8	DAC B,A 1/10	DAC #n,Rd 3/10	CALL lab 3/13	CALL *Rp 2/12	CALL *lab[B] 3/15	RL A 1/8	RL B 1/8	RL Rd 2/6	TRAP 1 1/14	STSP 1/8
F	JLO ra 2/5	DSB Rs,A 2/9	DSB #n,A 2/8	DSB Rs,B 2/9	DSB Rs,Rd 3/11	DSB #n,B 2/8	DSB B,A 1/10	DSB #n,Rd 3/10	CALLR lab 3/15	CALLR *Rp 2/14	CALLR *lab[B] 3/17	RLC A 1/8	RLC B 1/8	RLC Rd 2/6	TRAP 0 1/14	NOP 1/7

Second byte of two-byte instructions (F4xx):			
F4	8	MOVW *n[Rn] 4/15	DIV Rn.A 3/14-63
F4	9	JMPL *n[Rn] 4/16	
F4	A	MOV *n[Rn],A 4/17	
F4	B	MOV A,*n[Rn] 4/16	
F4	C	BR *n[Rn] 4/16	
F4	D	CMP *n[Rn],A 4/18	
F4	E	CALL *n[Rn] 4/20	
F4	F	CALLR *n[Rn] 4/22	

Legend:
* = Indirect addressing operand prefix
& = Direct addressing operand prefix
# = immediate operand
#16 = immediate 16-bit number
lab = 16-label
n = immediate 8-bit number
Pd = Peripheral register containing destination type
Pn = Peripheral register
Ps = Peripheral register containing source byte
ra = Relative address
Rd = Register containing destination type
Rn = Register file
Rp = Register pair
Rpd = Destination register pair
Rps = Source Register pair
Rs = Register containing source byte

† All conditional jumps (opcodes 01–0F), BTJO, BTJZ, and DJNZ instructions use two additional cycles if the branch is taken. The BTJO, BTJZ, and DJNZ instructions have a relative address as the last operand.

development system support

The TMS370 family development support tools include an assembler, a C compiler, a linker, and compact development tool, and an EEPROM/UVEPROM programmer.

- Assembler/linker (Part No. TMDS3740850–02 for PC)
  - Includes extensive macro capability
  - Allows high-speed operation
  - Provides format conversion utilities for popular formats
- ANSI C Compiler (Part No. TMDS3740855–02 for PC, Part No. TMDS3740555–09 for HP700™, Sun-3™ or Sun-4™)
  - Generates assembly code for the TMS370 that can be inspected easily
  - Improves code execution speed and reduces code size with optional optimizer pass
  - Enables direct reference to the TMS370's port registers by using a naming convention
  - Provides flexibility in specifying the storage for data objects
  - Interfaces C functions and assembly functions easily
  - Includes assembler and linker
- CDT370 (compact development tool) real-time in-circuit emulation
  - Base (Part Number EDSCDT370 – for PC, requires cable)
    - Cable for 28-pin PLCC (Part No. EDSTRG28PLCC02)
  - Includes EEPROM and EPROM programming support
  - Allows inspection and modification of memory locations
  - Allows uploading/downloading program and data memory
  - Executes programs and software routines
  - Includes 1024 samples trace buffer
  - Provides single-step executable instructions
  - Uses software breakpoints to halt program execution at selected address
- Microcontroller programmer
  - Base (Part No. TMDS3760500A – for PC, requires programmer head)
    - Single unit head for 28-pin PLCC (Part No. TMDS3780510A)
  - Personal computer based, window/function-key-oriented user interface for ease of use and rapid learning environment

HP700 is a trademark of Hewlett-Packard Company.
Sun-3 and Sun-4 are trademarks of Sun Microsystems, Inc.

development system support (continued)

- Design kit (Part No. TMDS3770110 – for PC)
  - Includes TMS370 Application Board and TMS370 Assembler diskette and documentation
  - Supports quick evaluation of TMS370 functionality
  - Provides capability to upload and download code
  - Provides capability to execute programs and software routines, and to single-step executable instructions
  - Provides software breakpoints to halt program execution at selected addresses
  - Includes wire-wrap prototype area
  - Includes reverse assembler
- Starter Kit (Part No. TMDS37000 – for PC)
  - Includes TMS370 Assembler diskette and documentation
  - Includes TMS370 Simulator
  - Includes programming adapter board and programming software
  - Does not include (to be supplied by the user):
    - + 5 V power supply
    - ZIF sockets
    - Nine-pin RS232 cable

device numbering conventions

Figure 12 illustrates the numbering and symbol nomenclature for the TMS370Cx0x family.

TMS 370 C 7 0 2 A FN T

Prefix:	**TMS**	**=**	**Standard prefix for fully qualified devices**
	SE	**=**	**System evaluator that is used for prototyping purpose.**
Family:	**370**	**=**	**TMS370 8-Bit Microcontroller Family**
Technology:	**C**	**=**	**CMOS**
Program Memory Types:	**0**	**=**	**Mask ROM**
	3	**=**	**Mask ROM, No Data EEPROM**
	7	**=**	**EPROM**
Device Type:	**0**	**=**	**'x0x devices containing the following modules:** **— Timer 1** **— Serial Communications Interface 1 (SCI1)**
Memory Size:	**2**	**=**	**8K bytes**
Temperature Ranges:	**A**	**=**	**–40°C to 85°C**
	L	**=**	**0°C to 70°C**
	T	**=**	**–40°C to 105°C**
Packages:	**FN**	**=**	**Plastic Leaded Chip Carrier**
	FZ	**=**	**Ceramic Leaded Chip Carrier**
ROM and EPROM Option:	**A**	**=**	**For ROM device, the watchdog timer can be configured as one of the three different mask options:** **– A standard watchdog** **– A hard watchdog** **– A simple watchdog** **The clock mask option can be either:** **– Divide-by-4 clock** **– Divide-by-1 (PLL) clock** **The low-power modes can be either:** **– Enabled** **– Disabled**
	NONE	**=**	**For EPROM device, a standard watchdog, a divide-by-4 clock, and low-power modes are enabled.**

Figure 12. TMS370Cx0x Family Nomenclature

device part numbers

Table 16 provides all of the ’x0x devices available. The device part number nomenclature is designed to assist ordering. Upon ordering, the customer must specify not only the device part number, but also the clock and watchdog timer options desired. Each device can have only one of the three possible watchdog timer options and one of the two clock options. The options to be specified pertain solely to orders involving ROM devices.

Table 16. Device Part Numbers

DEVICE PART NUMBERS FOR 28 PINS (LCC)
TMS370C002AFNA TMS370C002AFNL TMS370C002AFNT
TMS370C302AFNA TMS370C302AFNL TMS370C302AFNT
TMS370C702FNT
SE370C702FZT†

† System evaluators are for use in prototype environment and their reliability has not been characterized.

new code release form

Figure 13 shows a sample of the new code release form.

NEW CODE RELEASE FORM
TEXAS INSTRUMENTS
TMS370 MICROCONTROLLER PRODUCTS

DATE: _____

To release a new customer algorithm to TI incorporated into a TMS370 family microcontroller, complete this form and submit with the following information:

1. A ROM description in object form on Floppy Disk, Modem XFR, or EPROM (Verification file will be returned via same media)
2. An attached specification if not using TI standard specification as incorporated in TI's applicable device data book.

Company Name: _____
Street Address: _____
Street Address: _____
City: _____ State _____ Zip _____

Customer Part Number: _____
Customer Application: _____

TMS370 Device: _____

TI Customer ROM Number: _____
(provided by Texas Instruments)

OSCILLATOR FREQUENCY

	MIN	TYP	MAX
[] External Drive (CLKIN)	_____	_____	_____
[] Crystal	_____	_____	_____
[] Ceramic Resonator	_____	_____	_____

[] Supply Voltage MIN: _____ MAX: _____
(std range: 4.5V to 5.5V)

TEMPERATURE RANGE
[] 'L': 0° to 70°C (standard)
[] 'A': –40° to 85°C
[] 'T': –40° to 105°C

SYMBOLIZATION
[] TI standard symbolization
[] TI standard w/customer part number
[] Customer symbolization
(per attached spec, subject to approval)

Contact Mr./Ms.: _____
Phone: (_____)_____ Ext.: _____

Customer Purchase Order Number: _____

Customer Print Number *Yes:____ # _____
No: ____ (Std. spec to be followed)
*If Yes: Customer must provide "print" to TI w/NCRF for approval before ROM code processing starts.

CONTACT OPTIONS FOR THE 'A' VERSION TMS370 MICROCONTROLLERS

Low Power Modes	Watchdog counter	Clock Type
[] Enabled	[] Standard	[] Standard (/4)
[] Disabled	[] Hard Enabled	[] PLL (/1)
	[] Simple Counter	

NOTE:
Non 'A' version ROM devices of the TMS370 microcontrollers will have the "Low-power modes Enabled", "Divide-by-4" Clock, and "Standard" Watchdog options. See the *TMS370 Family User's Guide* (literature number SPNU127) or the *TMS370 Family Data Manual* (literature number SPNS014B).

PACKAGE TYPE
[] 'N' 28-pin PDIP
[] "FN" 28-pin PLCC
[] "N" 40-pin PDIP
[] "NJ" 40-pin PSDIP (formerly known as N2)
[] "FN" 44-pin PLCC
[] "FN" 68-pin PLCC
[] "NM" 64-pin PSDIP

BUS EXPANSION
[] YES [] NO

NON-STANDARD SPECIFICATIONS:
ALL NON-STANDARDS SPECIFICATIONS MUST BE APPROVED BY THE TI ENGINEERING STAFF: If the customer requires expedited production material (i.e., product which must be started in process prior to prototype approval and full production release) and non-standard spec issues are not resolved to the satisfaction of both the customer and TI in time for a scheduled shipment, the specification parameters in question will be processed/tested to the standard TI spec. Any such devices which are shipped without conformance to a mutually approved spec, will be identified by a 'P' in the symbolization preceding the TI part number.

RELEASE AUTHORIZATION:
This document, including any referenced attachments, is and will be the controlling document for all orders placed for this TI custom device. Any changes must be in writing and mutually agreed to by both the customer and TI. The prototype cycletime commences when this document is signed off and the verification code is approved by the customer.

1. Customer: _____ Date: _____

2. TI: Field Sales: _____
Marketing: _____
Prod. Eng.: _____
Proto. Release: _____

Figure 13. Sample New Code Release Form

Table 17. Peripheral File Frame Compilation

Table 17 is a collection of all the peripheral file frames used in the ’Cx0x (provided for a quick reference).

PF	BIT 7	BIT 6	BIT 5	BIT 4	BIT 3	BIT 2	BIT 1	BIT 0	REG
	System Configuration Registers								
P010	COLD START	**OSC POWER**	**PF AUTO WAIT**	OSC FLT FLAG	MC PIN WPO	MC PIN DATA	—	µP/µC MODE	SCCR0
P011	—	—	—	**AUTO WAIT DISABLE**	—	**MEMORY DISABLE**	—	—	SCCR1
P012	**HALT/ STANDBY**	**PWRDWN/ IDLE**	—	**BUS STEST**	**CPU STEST**	—	**INT1 NMI**	**PRIVILEGE DISABLE**	SCCR2
P013 to P016	Reserved								
P017	INT1 FLAG	INT1 PIN DATA	—	—	—	INT1 POLARITY	INT1 PRIORITY	INT1 ENABLE	INT1
P018	INT2 FLAG	INT2 PIN DATA	—	INT2 DATA DIR	INT2 DATA OUT	INT2 POLARITY	INT2 PRIORITY	INT2 ENABLE	INT2
P019	INT3 FLAG	INT3 PIN DATA	—	INT3 DATA DIR	INT3 DATA OUT	INT3 POLARITY	INT3 PRIORITY	INT3 ENABLE	INT3
P01A	BUSY	—	—	—	—	AP	W1W0	EXE	DEECTL
P01B	Reserved								
P01C	BUSY	VPPS	—	—	—	—	W0	EXE	EPCTL
P01D P01E P01F	Reserved								
	Digital Port Control Registers								
P020	Reserved								APORT1
P021	Port A Control Register 2 (must be 0)								APORT2
P022	Port A Data								ADATA
P023	Port A Direction								ADIR
P024 to P02B	Reserved								
P02C	Port D Control Register 1 (must be 0)					—	—	—	DPORT1
P02D	Port D Control Register 2 (must be 0)†					—	—	—	DPORT2
P02E	Port D Data					—	—	—	DDATA
P02F	Port D Direction					—	—	—	DDIR
	Timer Module Register Memory Map								
	Modes: Dual-Compare and Capture/Compare								
P040	Bit 15	T1Counter MSbyte						Bit 8	T1CNTR
P041	Bit 7	T1 Counter LSbyte						Bit 0	
P042	Bit 15	Compare Register MSbyte						Bit 8	T1C
P043	Bit 7	Compare Register LSbyte						Bit 0	

† To configure pin D3 as SYSCLK, set port D control register 2 = 08h.

Table 17. Peripheral File Frame Compilation (Continued)

PF	BIT 7	BIT 6	BIT 5	BIT 4	BIT 3	BIT 2	BIT 1	BIT 0	REG
	Modes: Dual-Compare and Capture / Compare (Continued)								
P044	Bit 15	Capture/Compare Register MSbyte						Bit 8	T1CC
P045	Bit 7	Capture/Compare Register LSbyte						Bit 0	
P046	Bit 15	Watchdog Counter MSbyte						Bit 8	WDCNTR
P047	Bit 7	Watchdog Counter LSbyte						Bit 0	
P048	Bit 7	Watchdog Reset Key						Bit 0	WDRST
P049	WD OVRFL TAP SEL†	WD INPUT SELECT2†	WD INPUT SELECT1†	WD INPUT SELECT0†	—	T1 INPUT SELECT2	T1 INPUT SELECT1	T1 INPUT SELECT0	T1CTL1
P04A	WD OVRFL RST ENA†	WD OVRFL INT ENA	WD OVRFL INT FLAG	T1 OVRFL INT ENA	T1 OVRFL INT FLAG	—	—	T1 SW RESET	T1CTL2
	Mode: Dual-Compare								
P04B	T1EDGE INT FLAG	T1C2 INT FLAG	T1C1 INT FLAG	—	—	T1EDGE INT ENA	T1C2 INT ENA	T1C1 INT ENA	T1CTL3
P04C	T1 MODE=0	T1C1 OUT ENA	T1C2 OUT ENA	T1C1 RST ENA	T1CR OUT ENA	T1EDGE POLARITY	T1CR RST ENA	T1EDGE DET ENA	T1CTL4
	Mode: Capture / Compare								
P04B	T1EDGE INT FLAG	—	T1C1 INT FLAG	—	—	T1EDGE INT ENA	—	T1C1 INT ENA	T1CTL3
P04C	T1 MODE = 1	T1C1 OUT ENA	—	T1C1 RST ENA	—	T1EDGE POLARITY	—	T1EDGE DET ENA	T1CTL4
	Modes: Dual-Compare and Capture / Compare								
P04D	—	—	—	—	T1EVT DATA IN	T1EVT DATA OUT	T1EVT FUNCTION	T1EVT DATA DIR	T1PC1
P04E	T1PWM DATA IN	T1PWM DATA OUT	T1PWM FUNCTION	T1PWM DATA DIR	T1IC/CR DATA IN	T1IC/CR DATA OUT	T1IC/CR FUNCTION	T1IC/CR DATA DIR	T1PC2
P04F	**T1 STEST**	**T1 PRIORITY**	—	—	—	—	—	—	T1PRI
	SCI1 Module Control Memory Map								
P050	STOP BITS	EVEN/ODD PARITY	PARITY ENABLE	ASYNC/ ISOSYNC	ADDRESS/ IDLE WUP	SCI CHAR2	SCI CHAR1	SCI CHAR0	SCICCR
P051	—	—	SCI SW RESET	CLOCK	TXWAKE	SLEEP	TXENA	RXENA	SCICTL
P052	BAUDF (MSB)	BAUDE	BAUDD	BAUDC	BAUDB	BAUDA	BAUD9	BAUD8	BAUD MSB
P053	BAUD7	BAUD6	BAUD5	BAUD4	BAUD3	BAUD2	BAUD1	BAUD0 (LSB)	BAUD LSB
P054	TXRDY	TX EMPTY	—	—	—	—	—	SCI TX INT ENA	TXCTL
P055	RX ERROR	RXRDY	BRKDT	FE	OE	PE	RXWAKE	SCI RX INT ENA	RXCTL
P056	Reserved								
P057	RXDT7	RXDT6	RXDT5	RXDT4	RXDT3	RXDT2	RXDT1	RXDT0	RXBUF
P058	Reserved								

† Once the WD OVRFL RST ENA bit is set, these bits cannot be changed until a reset; this applies only to the standard watchdog and to simple counter. In the hard watchdog, these bits can be modified at any time; the WD INPUT SELECT2 bits are ignored.

Table 17. Peripheral File Frame Compilation (Continued)

PF	BIT 7	BIT 6	BIT 5	BIT 4	BIT 3	BIT 2	BIT 1	BIT 0	REG
	SCI1 Module Control Memory Map (Continued)								
P059	TXDT7	TXDT6	TXDT5	TXDT4	TXDT3	TXDT2	TXDT1	TXDT0	TXBUF
P05A P05B P05C	Reserved								
P05D	—	—	—	—	SCICLK DATA IN	SCICLK DATA OUT	SCICLK FUNCTION	SCICLK DATA DIR	SCIPC1
P05E	SCITXD DATA IN	SCITXD DATA OUT	SCITXD FUNCTION	SCITXD DATA DIR	SCIRXD DATA IN	SCIRXD DATA OUT	SCIRXD FUNCTION	SCIRXD DATA DIR	SCIPC2
P05F	**SCI STEST**	**SCITX PRIORITY**	**SCIRX PRIORITY**	**SCI ESPEN**	—	—	—	—	SCIPRI

absolute maximum ratings over operating free-air temperature range (unless otherwise noted)†

Supply voltage range, V_{CC} (see Note 1) . . . . . –0.6 V to 7 V
Input voltage range, All pins except MC . . . . . –0.6 V to 7 V
MC . . . . . –0.6 V to 14 V
Input clamp current, I_{IK} ($V_I < 0$ or $V_I > V_{CC}$) . . . . . ±20 mA
Output clamp current, I_{OK} ($V_O < 0$ or $V_O > V_{CC}$) . . . . . ±20 mA
Continuous output current per buffer, I_O ($V_O = 0$ to V_{CC}) (see Note 2) . . . . . ±10 mA
Maximum I_{CC} current . . . . . 170 mA
Maximum I_{SS} current . . . . . – 170 mA
Continuous power dissipation . . . . . 500 mW
Operating free-air temperature range, T_A: L version . . . . . 0°C to 70°C
A version . . . . . – 40°C to 85°C
T version . . . . . – 40°C to 105°C
Storage temperature range, T_{stg} . . . . . –65°C to 150°C

† Stresses beyond those listed under “absolute maximum ratings” may cause permanent damage to the device. These are stress ratings only, and functional operation of the device at these or any other conditions beyond those indicated under “recommended operating conditions” is not implied. Exposure to absolute-maximum-rated conditions for extended periods may affect device reliability.

NOTES: 1. Unless otherwise noted, all voltage values are with respect to V_{SS}.
2. Electrical characteristics are specified with all output buffers loaded with specified I_O current. Exceeding the specified I_O current in any buffer can affect the levels on other buffers.

recommended operating conditions

			MIN	NOM	MAX	UNIT
V_{CC}	Supply voltage (see Note 1)		4.5	5	5.5	V
	RAM data-retention supply voltage (see Note 3)		3		5.5	V
V_{IL}	Low-level input voltage	All pins except MC	V_{SS}		0.8	V
		MC, normal operation	V_{SS}		0.3	
V_{IH}	High-level input voltage	All pins except MC, XTAL2/CLKIN, and $\overline{\text{RESET}}$	2		V_{CC}	V
		XTAL2/CLKIN	0.8 V_{CC}		V_{CC}	
		$\overline{\text{RESET}}$	0.7 V_{CC}		V_{CC}	
V_{MC}	MC (mode control) voltage	EEPROM write protect override (WPO)	11.7	12	13	V
		EPROM programming voltage (V_{PP})	13	13.2	13.5	
		Microcomputer	V_{SS}		0.3	
T_A	Operating free-air temperature	L version	0		70	°C
		A version	– 40		85	
		T version	– 40		105	

NOTES: 1. Unless otherwise noted, all voltage values are with respect to V_{SS}.
3. $\overline{\text{RESET}}$ must be activated externally when V_{CC} or SYSCLK is not within the recommended operating range.

electrical characteristics over recommended operating free-air temperature range (unless otherwise noted)

PARAMETER			TEST CONDITIONS	MIN	TYP	MAX	UNIT
V_{OL}	Low-level output voltage		I_{OL} = 1.4 mA			0.4	V
V_{OH}	High-level output voltage		I_{OH} = –50 µA	0.9 V_{CC}			V
			I_{OH} = –2 mA	2.4			
I_I	Input current	MC	0 V ≤ V_I ≤ 0.3 V			10	µA
			0.3 V < V_I ≤ 13 V			650	
			See Note 4 12 V ≤ V_I ≤ 13 V			50	mA
		I/O pins	0 V ≤ V_I ≤ V_{CC}			± 10	µA
I_{OL}	Low-level output current		V_{OL} = 0.4 V	1.4			mA
I_{OH}	High-level output current		V_{OH} = 0.9 V_{CC}	– 50			µA
			V_{OH} = 2.4 V	– 2			mA
I_{CC}	Supply current (operating mode) OSC POWER bit = 0 (see Note 7)		See Notes 5 and 6 SYSCLK = 5 MHz		20	36	mA
			See Notes 5 and 6 SYSCLK = 3 MHz		13	25	
			See Notes 5 and 6 SYSCLK = 0.5 MHz		5	11	
	Supply current (STANDBY mode) OSC POWER bit = 0 (see Note 8)		See Notes 5 and 6 SYSCLK = 5 MHz		10	17	mA
			See Notes 5 and 6 SYSCLK = 3 MHz		6.5	11	
			See Notes 5 and 6 SYSCLK = 0.5 MHz		2	3.5	
	Supply current (STANDBY mode) OSC POWER bit = 1 (see Note 9)		See Notes 5 and 6 SYSCLK = 3 MHz		4.5	8.6	mA
			See Notes 5 and 6 SYSCLK = 0.5 MHz		1.5	3.0	
	Supply current (HALT mode)		See Note 5 XTAL2/CLKIN < 0.2 V		1	30	µA

NOTES:
4. Input current I_{PP} is a maximum of 50 mA only when programming EPROM.
5. Single chip mode, ports configured as inputs or outputs with no load. All inputs ≤ 0.2 V or ≥ V_{CC} – 0.2 V.
6. XTAL2/CLKIN is driven with an external square wave signal with 50% duty cycle and rise and fall times less than 10 ns. Current can be higher with a crystal oscillator. At 5 MHz SYSCLK, this extra current = 0.01 mA x (total load capacitance + crystal capacitance in pF).
7. Maximum operating current = 5.6 (SYSCLK) + 8 mA.
8. Maximum standby current = 3 (SYSCLK) + 2 mA. (OSC POWER bit = 0).
9. Maximum standby current = 2.24 (SYSCLK) + 1.9 mA. (OSC POWER bit = 1, only valid up to 3 MHz of SYSCLK).

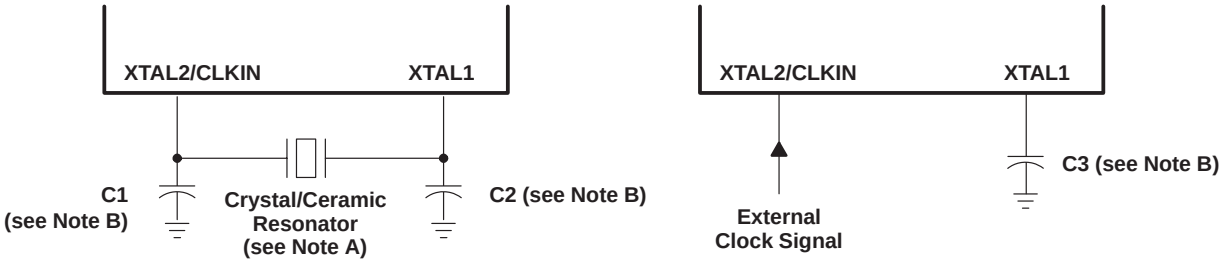

NOTES: A. The crystal/ceramic resonator frequency is four times the reciprocal of the system clock period.
B. The values of C1 and C2 are typically 15 pF and C3 is typically 50 pF. See the manufacturer's recommendations for ceramic resonators.

Figure 14. Recommended Crystal/Clock Connections

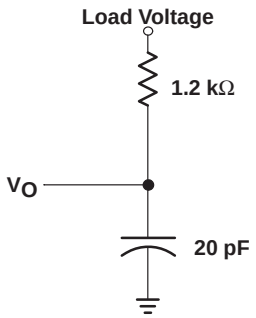

Case 1: $V_O = V_{OH} = 2.4$ V; Load Voltage = 0 V
Case 2: $V_O = V_{OL} = 0.4$ V; Load Voltage = 2.1 V

NOTE A: All measurements are made with the pin loading as shown unless otherwise noted. All measurements are made with XTAL2/CLKIN driven by an external square wave signal with a 50% duty cycle and rise and fall times less than 10 ns unless otherwise stated.

Figure 15. Typical Output Load Circuit (See Note A)

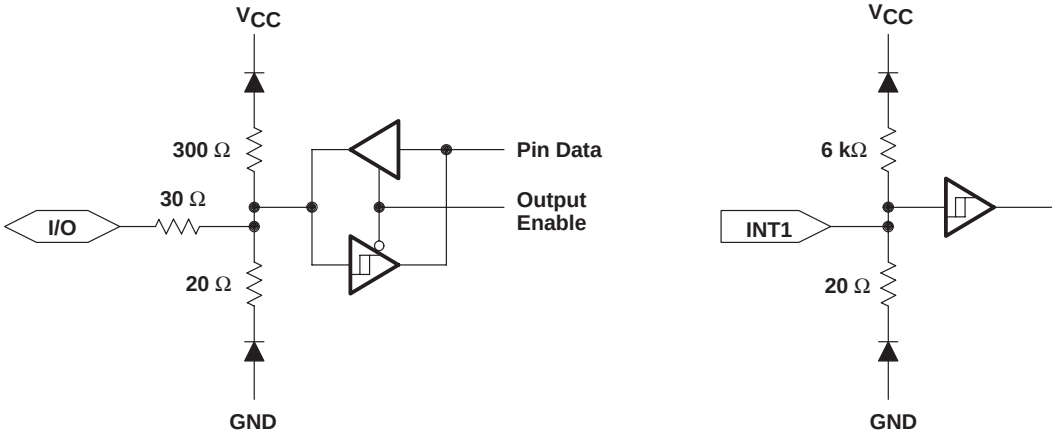

Figure 16. Typical Buffer Circuitry

PARAMETER MEASUREMENT INFORMATION

timing parameter symbology

Timing parameter symbols have been created in accordance with JEDEC Standard 100. In order to shorten the symbols, some of the pin names and other related terminology have been abbreviated as follows:

AR	Array	SC	SYSCLK
B	Byte	SCC	SCICLK
CI	XTAL2/CLKIN	TXD	SCITXD
RXD	SCIRXD		

Lowercase subscripts and their meanings are:

c	cycle time (period)	su	setup time
d	delay time	v	valid time
f	fall time	w	pulse duration (width)
r	rise time		

The following additional letters are used with these meanings:

H	High
L	Low
V	Valid

All timings are measured between high and low measurement points as indicated in Figure 17 and Figure 18.

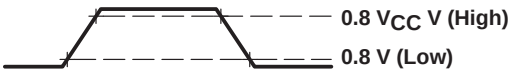

Figure 17. XTAL2/CLKIN Measurement Points

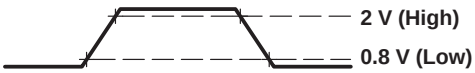

Figure 18. General Measurement Points

external clocking requirements for divide-by-4 clock (see Note 10 and Figure 19)

NO.			MIN	MAX	UNIT
1	$t_{w(Cl)}$	Pulse duration, XTAL2/CLKIN (see Note 11)	20		ns
2	$t_{r(Cl)}$	Rise time, XTAL2/CLKIN		30	ns
3	$t_{f(Cl)}$	Fall time, XTAL2/CLKIN		30	ns
4	$t_{d(CIH-SCL)}$	Delay time, XTAL2/CLKIN rise to SYSCLK fall		100	ns
	CLKIN	Crystal operating frequency	2	20	MHz
	SYSCLK	Internal system clock operating frequency†	0.5	5	MHz

† SYSCLK = CLKIN/4

NOTES: 10. For V_{IL} and V_{IH}, refer to recommended operating conditions.
11. This pulse can be either a high pulse, which extends from the earliest valid high to the final valid high in an XTAL2/CLKIN cycle, or a low pulse, which extends from the earliest valid low to the final valid low in an XTAL2/CLKIN cycle.

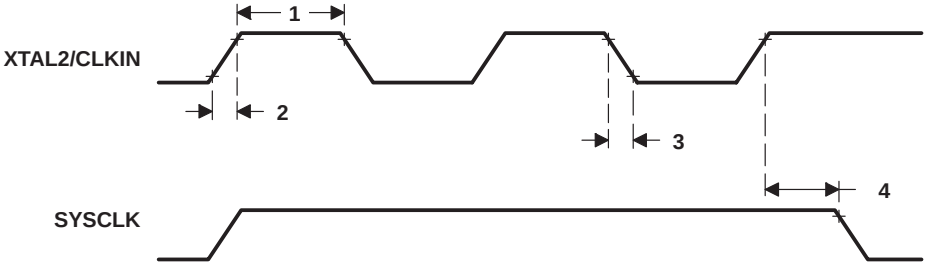

Figure 19. External Clock Timing for Divide-by-4

external clocking requirements for divide-by-1 clock (PLL) (see Note 10 and Figure 20)

NO.			MIN	MAX	UNIT
1	$t_{w(Cl)}$	Pulse duration, XTAL2/CLKIN (see Note 11)	20		ns
2	$t_{r(Cl)}$	Rise time, XTAL2/CLKIN		30	ns
3	$t_{f(Cl)}$	Fall time, XTAL2/CLKIN		30	ns
4	$t_{d(CIH-SCH)}$	Delay time, XTAL2/CLKIN rise to SYSCLK rise		100	ns
	CLKIN	Crystal operating frequency	2	5	MHz
	SYSCLK	Internal system clock operating frequency‡	2	5	MHz

‡ SYSCLK = CLKIN/1

NOTES: 10. For V_{IL} and V_{IH}, refer to recommended operating conditions.
11. This pulse can be either a high pulse, which extends from the earliest valid high to the final valid high in an XTAL2/CLKIN cycle, or a low pulse, which extends from the earliest valid low to the final valid low in an XTAL2/CLKIN cycle.

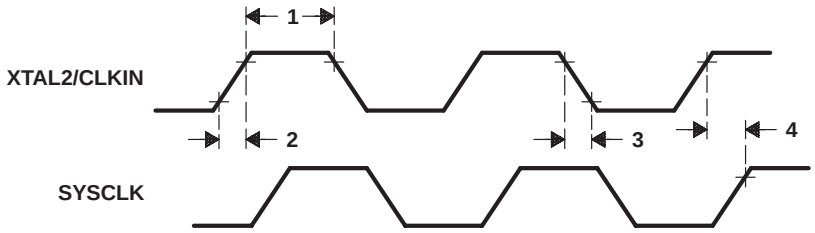

Figure 20. External Clock Timing for Divide-by-1

switching characteristics and timing requirements (see Note 12 and Figure 21)

NO.	PARAMETER			MIN	MAX	UNIT
5	t_c	Cycle time, SYSCLK (system clock)	Divide-by-4	200	2000	ns
			Divide-by-1	200	500	
6	$t_{w(SCL)}$	Pulse duration, SYSCLK low		0.5 t_c–20	0.5 t_c	ns
7	$t_{w(SCH)}$	Pulse duration, SYSCLK high		0.5 t_c	0.5 t_c + 20	ns

NOTE 12: t_c = system-clock cycle time = 1/SYSCLK

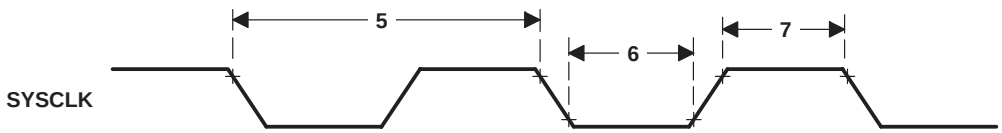

Figure 21. SYSCLK Timing

general purpose output signal switching time requirements (see Figure 22)

		MIN	NOM	MAX	UNIT
t_r	Rise time		30		ns
t_f	Fall time		30		ns

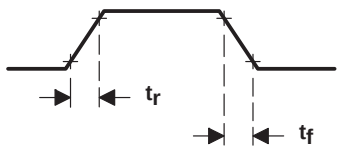

Figure 22. Signal Switching Time

recommended EEPROM timing requirements for programming

		MIN	MAX	UNIT
$t_{w(PGM)B}$	Pulse duration, programming signal to ensure valid data is stored (byte mode)	10		ms
$t_{w(PGM)AR}$	Pulse duration, programming signal to ensure valid data is stored (array mode)	20		ms

recommended EPROM operating conditions for programming

			MIN	NOM	MAX	UNIT
V_{CC}	Supply voltage		4.75	5.5	6	V
V_{PP}	Supply voltage at MC pin		13	13.2	13.5	V
I_{PP}	Supply current at MC pin during programming (V_{PP} = 13 V)			30	50	mA
SYSCLK	System clock operating frequency	Divide-by-4	0.5		5	MHz
		Divide-by-1	2		5	

recommended EPROM timing requirements for programming

		MIN	NOM	MAX	UNIT
$t_{w(EPGM)}$	Pulse duration, programming signal (see Note 13)	0.40	0.50	3	ms

NOTE 13: Programming pulse is active when both EXE (EPCTL.0) and V_{PPS} (EPCTL.6) are set.

SCI1 isosynchronous mode timing characteristics and requirements for internal clock (see Note 12 and Figure 23)

NO.			MIN	MAX	UNIT
24	$t_{c(SCC)}$	Cycle time, SCICLK	$2t_c$	$131072t_c$	ns
25	$t_{w(SCCL)}$	Pulse duration, SCICLK low	t_c – 45	$0.5t_{c(SCC)}$+45	ns
26	$t_{w(SCCH)}$	Pulse duration, SCICLK high	t_c – 45	$0.5t_{c(SCC)}$+45	ns
27	$t_{d(SCCL-TXDV)}$	Delay time, SCITXD valid after SCICLK low	– 50	60	ns
28	$t_{v(SCCH-TXD)}$	Valid time, SCITXD data valid after SCICLK high	$t_{w(SCCH)}$ – 50		ns
29	$t_{su(RXD-SCCH)}$	Setup time, SCIRXD to SCICLK high	0.25 t_c + 145		ns
30	$t_{v(SCCH-RXD)}$	Valid time, SCIRXD data valid after SCICLK high	0		ns

NOTE 12: t_c = system-clock cycle time = 1/SYSCLK

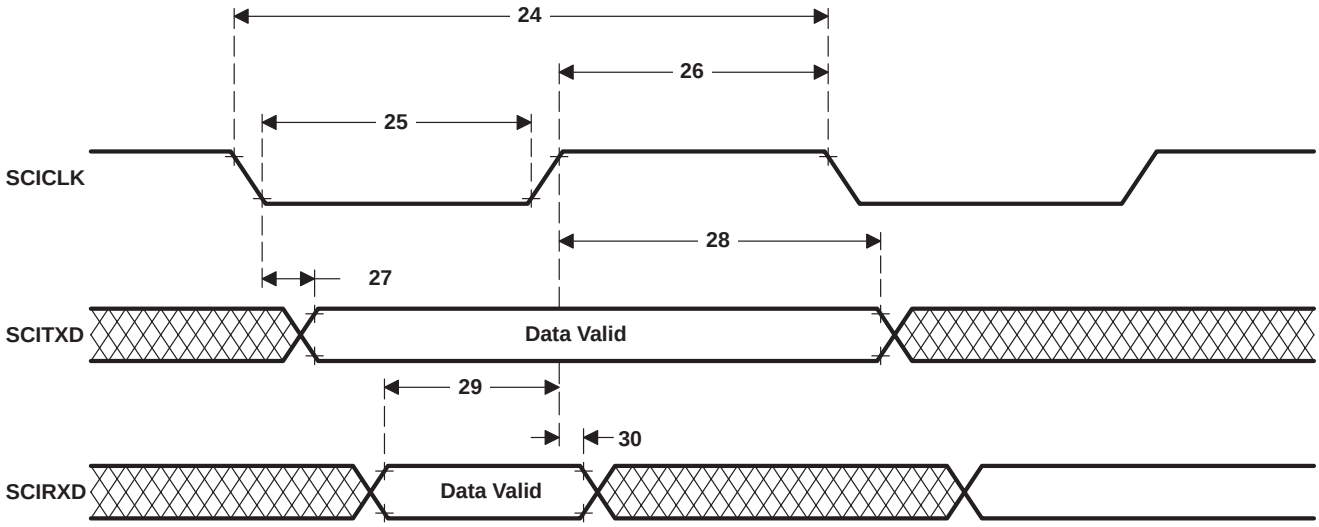

Figure 23. SCI1 Isosynchronous Mode Timing for Internal Clock

SCI1 isosynchronous mode timing characteristics and requirements for external clock (see Note 12 and Figure 24)

NO.			MIN	MAX	UNIT
31	$t_{c(SCC)}$	Cycle time, SCICLK	$10t_c$		ns
32	$t_{w(SCCL)}$	Pulse duration, SCICLK low	$4.25t_c + 120$		ns
33	$t_{w(SCCH)}$	Pulse duration, SCICLK high	$t_c + 120$		ns
34	$t_{d(SCCL-TXDV)}$	Delay time, SCITXD valid after SCICLK low		$4.25t_c + 145$	ns
35	$t_{v(SCCH-TXD)}$	Valid time, SCITXD data valid after SCICLK high	$t_{w(SCCH)}$		ns
36	$t_{su(RXD-SCCH)}$	Setup time, SCIRXD to SCICLK high	40		ns
37	$t_{v(SCCH-RXD)}$	Valid time, SCIRXD data after SCICLK high	$2t_c$		ns

NOTE 12: t_c = system-clock cycle time = 1/SYSCLK

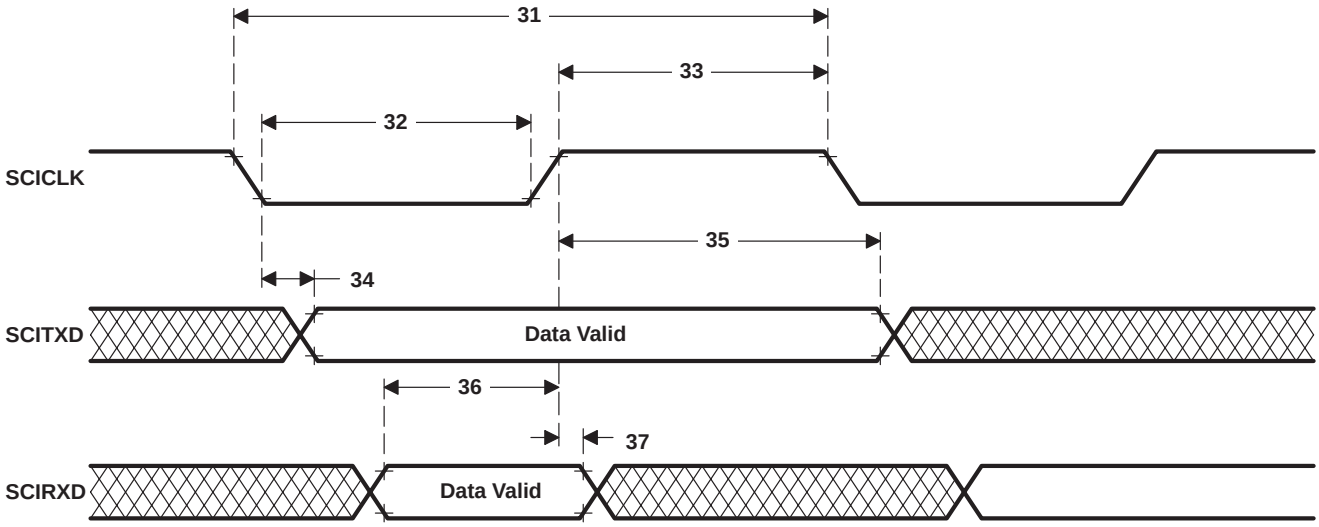

Figure 24. SCI1 Isosynchronous Timing for External Clock

Table 18 is designed to aid the user in referencing a device part number to a mechanical drawing. The table shows a cross-reference of the device part number to the TMS370 generic package name and the associated mechanical drawing by drawing number and name.

Table 18. TMS370Cx0x Family Package Type and Mechanical Cross-Reference

PKG TYPE (mil pin spacing)	TMS370 GENERIC NAME	PKG TYPE NO. AND MECHANICAL NAME	DEVICE PART NUMBERS
FN – 28 pin (50-mil pin spacing)	PLASTIC LEADED CHIP CARRIER (PLCC)	FN(S-PQCC-J**) PLASTIC J-LEADED CHIP CARRIER	TMS370C002AFNA TMS370C002AFNL TMS370C002AFNT TMS370C302AFNA TMS370C302AFNL TMS370C302AFNT TMS370C702FNT
FZ – 28 pin (50-mil pin spacing)	CERAMIC LEADED CHIP CARRIER (CLCC)	FZ(S-CQCC-J**) J-LEADED CERAMIC CHIP CARRIER	SE370C702FZT

MECHANICAL DATA

FN (S-PQCC-J)** **PLASTIC J-LEADED CHIP CARRIER**

20 PIN SHOWN

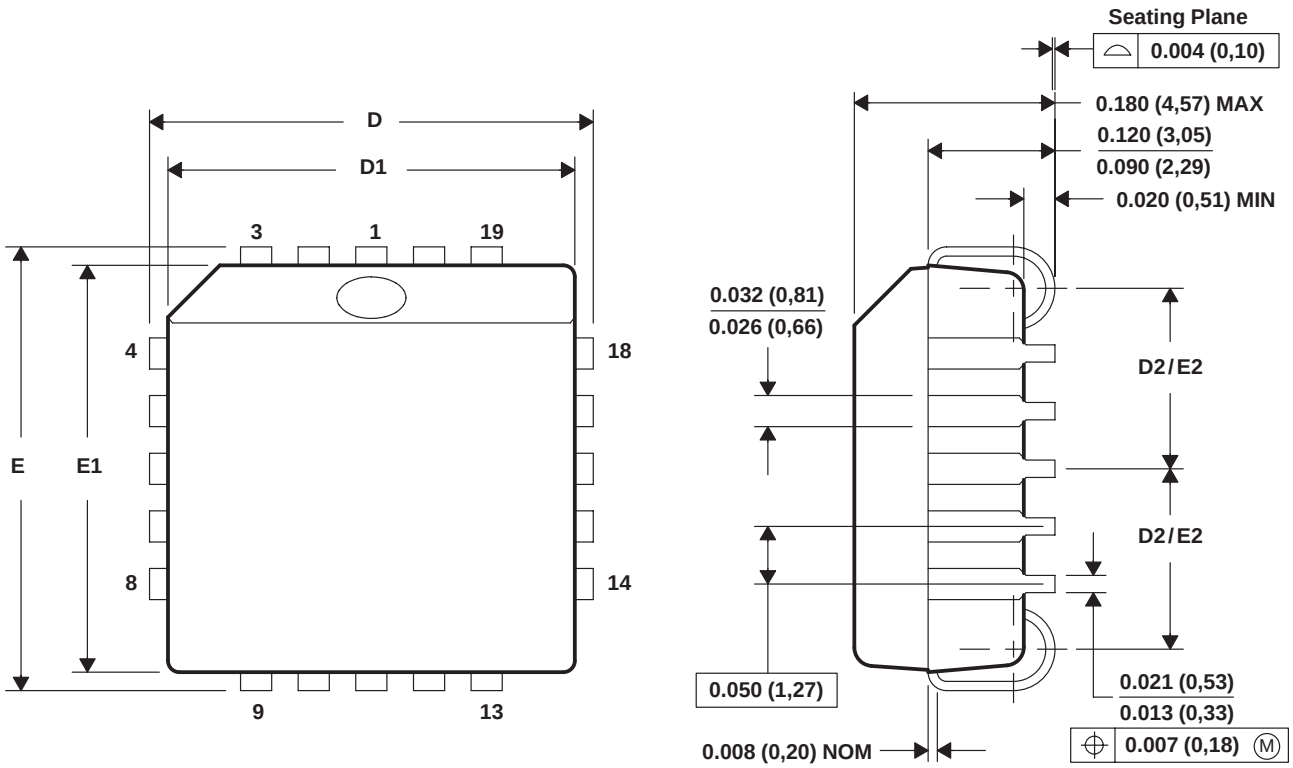

NO. OF PINS **	D / E		D1 / E1		D2 / E2	
	MIN	MAX	MIN	MAX	MIN	MAX
20	0.385 (9,78)	0.395 (10,03)	0.350 (8,89)	0.356 (9,04)	0.141 (3,58)	0.169 (4,29)
28	0.485 (12,32)	0.495 (12,57)	0.450 (11,43)	0.456 (11,58)	0.191 (4,85)	0.219 (5,56)
44	0.685 (17,40)	0.695 (17,65)	0.650 (16,51)	0.656 (16,66)	0.291 (7,39)	0.319 (8,10)
52	0.785 (19,94)	0.795 (20,19)	0.750 (19,05)	0.756 (19,20)	0.341 (8,66)	0.369 (9,37)
68	0.985 (25,02)	0.995 (25,27)	0.950 (24,13)	0.958 (24,33)	0.441 (11,20)	0.469 (11,91)
84	1.185 (30,10)	1.195 (30,35)	1.150 (29,21)	1.158 (29,41)	0.541 (13,74)	0.569 (14,45)

4040005 / B 03/95

NOTES: A. All linear dimensions are in inches (millimeters).
B. This drawing is subject to change without notice.
C. Falls within JEDEC MS-018

MECHANICAL DATA

FZ (S-CQCC-J)** **J-LEADED CERAMIC CHIP CARRIER**

28 LEAD SHOWN

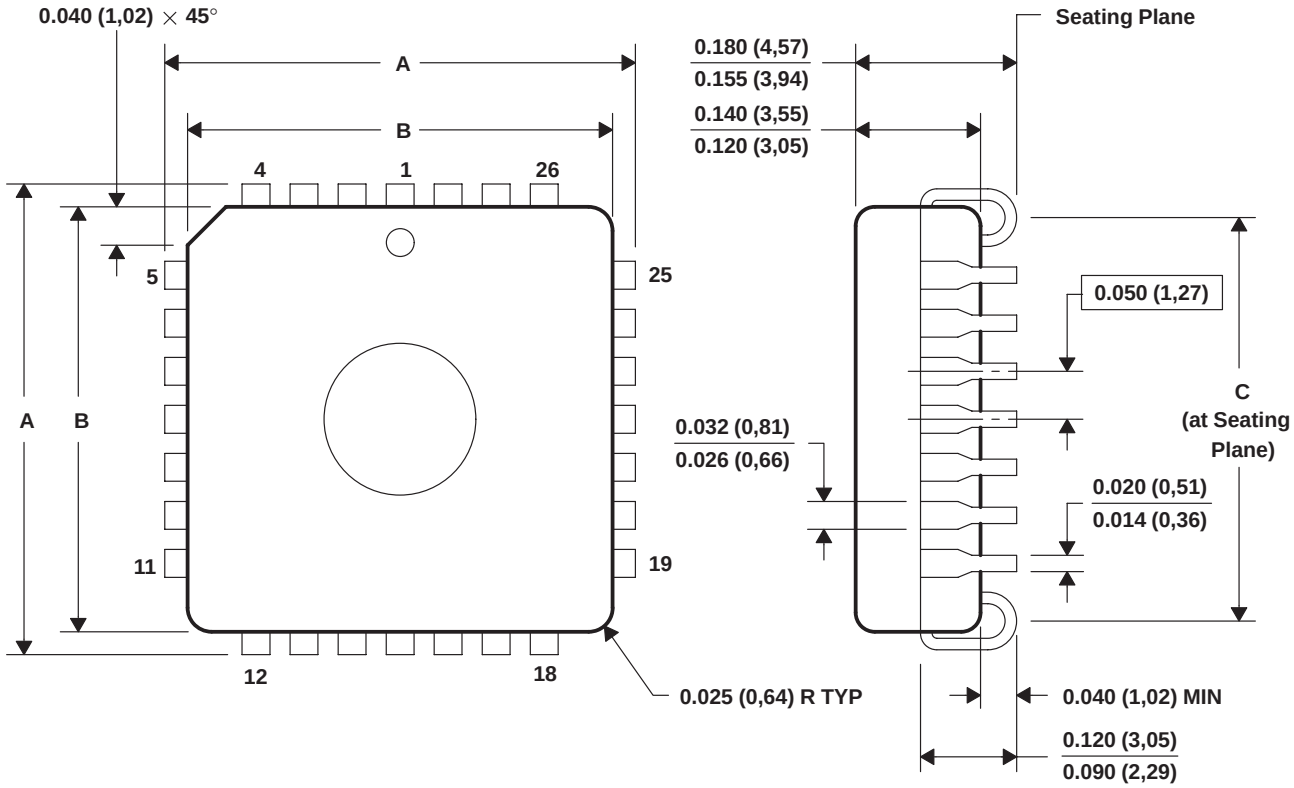

JEDEC OUTLINE	NO. OF PINS**	A		B		C	
		MIN	MAX	MIN	MAX	MIN	MAX
MO-087AA	28	0.485 (12,32)	0.495 (12,57)	0.430 (10,92)	0.455 (11,56)	0.410 (10,41)	0.430 (10,92)
MO-087AB	44	0.685 (17,40)	0.695 (17,65)	0.630 (16,00)	0.655 (16,64)	0.610 (15,49)	0.630 (16,00)
MO-087AC	52	0.785 (19,94)	0.795 (20,19)	0.730 (18,54)	0.765 (19,43)	0.680 (17,28)	0.740 (18,79)
MO-087AD	68	0.985 (25,02)	0.995 (25,27)	0.930 (23,62)	0.955 (24,26)	0.910 (23,11)	0.930 (23,62)

4040219/B 03/95

NOTES: A. All linear dimensions are in inches (millimeters).
B. This drawing is subject to change without notice.
C. This package can be hermetically sealed with a ceramic lid using glass frit.

IMPORTANT NOTICE

Texas Instruments and its subsidiaries (TI) reserve the right to make changes to their products or to discontinue any product or service without notice, and advise customers to obtain the latest version of relevant information to verify, before placing orders, that information being relied on is current and complete. All products are sold subject to the terms and conditions of sale supplied at the time of order acknowledgement, including those pertaining to warranty, patent infringement, and limitation of liability.

TI warrants performance of its semiconductor products to the specifications applicable at the time of sale in accordance with TI's standard warranty. Testing and other quality control techniques are utilized to the extent TI deems necessary to support this warranty. Specific testing of all parameters of each device is not necessarily performed, except those mandated by government requirements.

CERTAIN APPLICATIONS USING SEMICONDUCTOR PRODUCTS MAY INVOLVE POTENTIAL RISKS OF DEATH, PERSONAL INJURY, OR SEVERE PROPERTY OR ENVIRONMENTAL DAMAGE ("CRITICAL APPLICATIONS"). TI SEMICONDUCTOR PRODUCTS ARE NOT DESIGNED, AUTHORIZED, OR WARRANTED TO BE SUITABLE FOR USE IN LIFE-SUPPORT DEVICES OR SYSTEMS OR OTHER CRITICAL APPLICATIONS. INCLUSION OF TI PRODUCTS IN SUCH APPLICATIONS IS UNDERSTOOD TO BE FULLY AT THE CUSTOMER'S RISK.

In order to minimize risks associated with the customer's applications, adequate design and operating safeguards must be provided by the customer to minimize inherent or procedural hazards.

TI assumes no liability for applications assistance or customer product design. TI does not warrant or represent that any license, either express or implied, is granted under any patent right, copyright, mask work right, or other intellectual property right of TI covering or relating to any combination, machine, or process in which such semiconductor products or services might be or are used. TI's publication of information regarding any third party's products or services does not constitute TI's approval, warranty or endorsement thereof.

Copyright © 1998, Texas Instruments Incorporated