TDA9400, TDA9500, TDA9403, TDA9503, TDA9513 Line Circuits for TV Receivers (16-Pin Plastic Package)

Integrated bipolar circuits for pulse separation and line synchronisation in TV receivers. The TDA9400/TDA9403 and TDA9500/TDA9503 are in the main identical except the output stages and the shape of their output signals. The TDA9400 and TDA9403 show a Darlington emitter follower output stage, the output signal of which is suitable for driving thyristor line output stages. The output stage of the TDA9500 and TDA9503 supplies signals for driving transistor line output stages. The TDA9513 has, compared with the similar type TDA9503, an inverted output signal suited for driving darlington transistor line output stages.

All types comprise the sync separator with internal noise suppression, the frame pulse generator, the phase comparator, a switching stage for automatic changeover of noise immunity and change of the slope of the phase control circuit, the line oscillator with frequency range limiter, a high-gain phase control circuit, a stage for generating the burst gate pulses in color TV receivers, an undervoltage protection circuit and – as mentioned above – different output stages.

All ICs deliver at pin 8 prepared frame sync pulses for triggering the frame oscillator. With the TDA9403, TDA9503, and TDA9513, the integration of the sync signal can be altered by means of an external RC combination connected to pin 7. Furthermore there is a little difference in amplitude and phase of the burst gate pulses between TDA9403/TDA9503/TDA9513 and TDA9400/TDA9500. The exact data may be found in the data sheets.

All types may be switched in the phase comparator for video recording operation. A terminal (pin 14) for phase correction with the aid of the frame parabola is provided. By changing the resistor between pin 16 and ground other line frequencies than 15625 Hz (used in Germany) are adjustable, e.g. 10125 Hz for England, 15750 Hz for USA or 20475 Hz for France and Belgium.

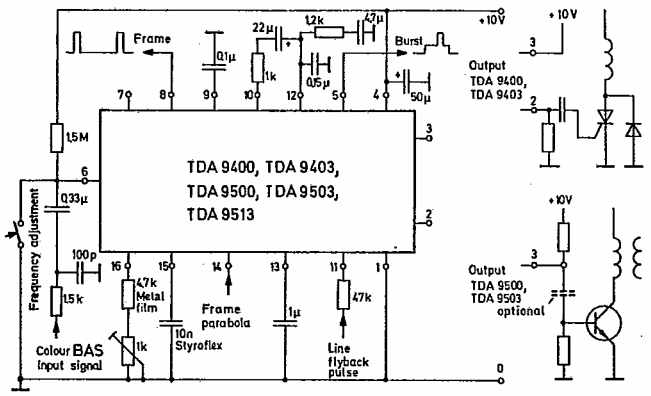

Application Circuit

The Darlington emitter follower output stage of the TDA9400 and TDA9403 delivers an output current up to -600 mA. The output transistor of the TDA9500, TDA9503 and TDA9513 is operated in common emitter configuration and its output current is limited to 50 mA. The supply voltage of all types is 10...12 V and the current consumption is about 25 mA.

TDA1940, TDA1940F, TDA1950, TDA1950F Line Circuits for TV Receivers (18-Pin Plastic Package)

These integrated circuits are advanced versions of the well-known TBA940/950, TDA9400/9500 etc. integrated line oscillator circuits. They comprise all stages for sync separation and line synchronisation in TV receivers in one single silicon chip. Due to their high degree of integration, the number of external components is very small. The four types TDA1940, TDA1940F, TDA1950 and TDA1950F are identical except the following: at pin 2 the types having the suffix "F" supply horizontal output pulses of longer duration compared with the basic types.

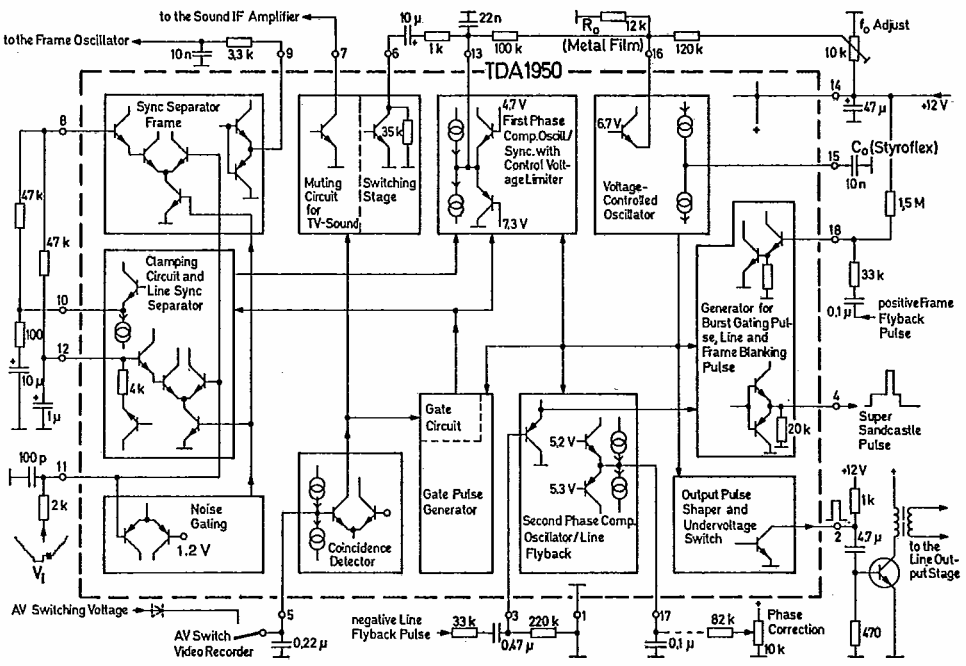

TDA1950 Application Circuit and Block Diagram

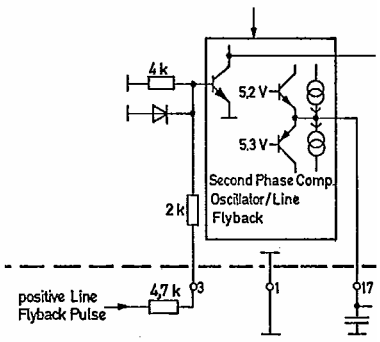

Circuit detail at pin 3 of the types TDA1940 and TDA1940F