VERSION	CHANGE CONTENT	DATE
V00	FIRST ISSUE	2011-07-12
V01	CHANGE PCB	2011-07-18
V02	CHANGE PCB	2011-11-25

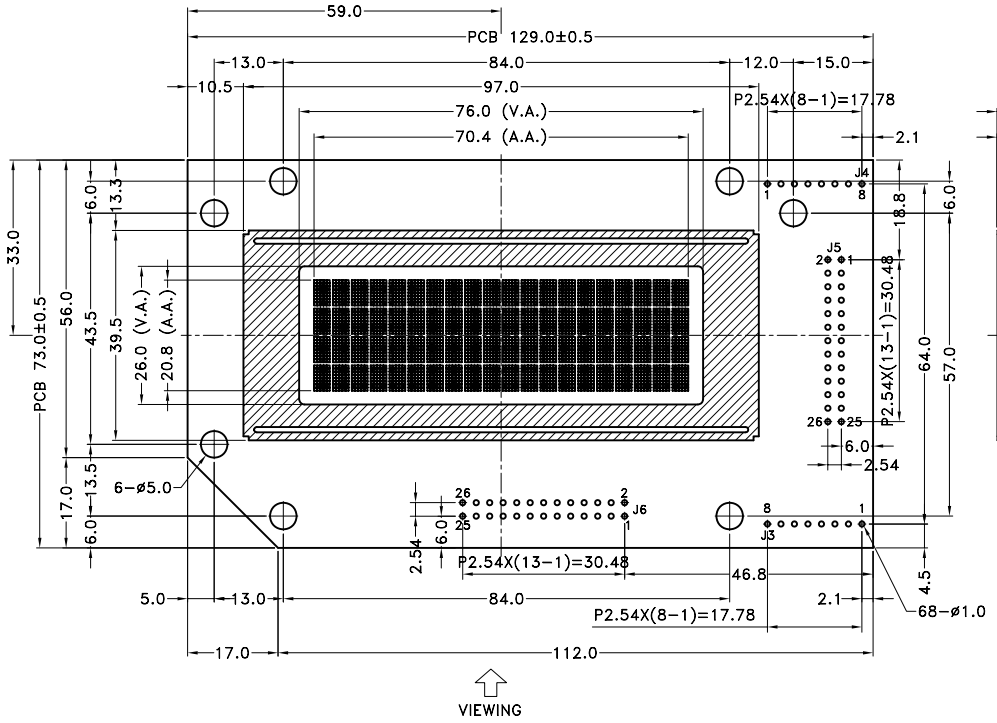

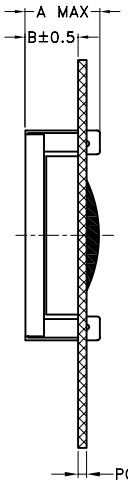

TYPE	A	B
LED B/L	14.5	9.9

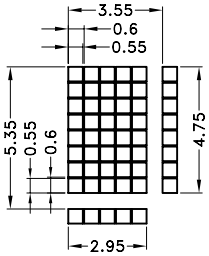

DOTS DETAIL
SCALE 5:1

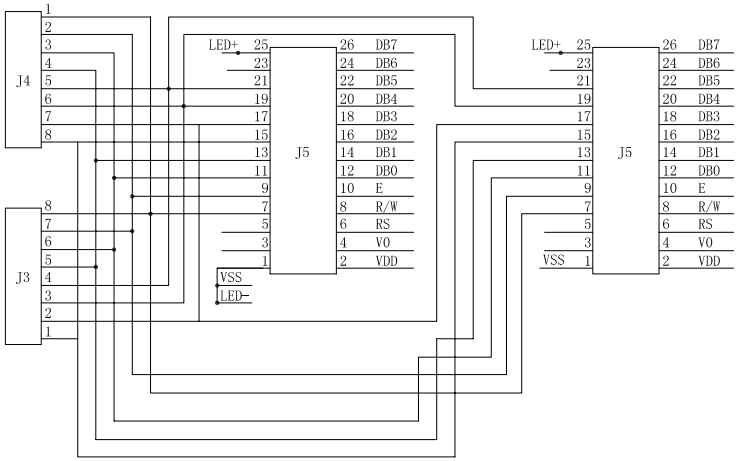

SPECIFICATIONS
1. DISPLAY TYPE: STN/TRANSMISSIVE/POSITIVE/Y-G
2. LCD DRIVING VOLTAGE: 4.7V
3. LOGIC VOLTAGE: 5.0V
4. VIEWING DIRECTION: 6 O`CLOCK
5. OPERATING TEMP: -1 0° C~6 0° C
6. STORAGE TEMP: -2 0° C~7 0° C
7. DRIVE MODE: 1/16 DUTY,1/5 BIAS
8. BACKLIGHT: YELLOW GREEN/BOTTOM BACKLIGHT/5.0V
9. OTHER:
MECHANICAL TOL.± 0.3 UNLESS SPECIFIED

NOTE:

DESCRIPTION: C/D

SCALE: FIT

SHEET: 1 OF 1

TINSHARP

TINSHARP INDUSTRIAL CO.,LTD.

PROJECTION	MODEL	SERIAL NUMBER
UNIT: mm	TC2004A-01S	LXL0977

APP:		CHK:		DWN:	
DATE:		DATE:		DATE:	