Pioneer sound.vision.soul

# Service Manual

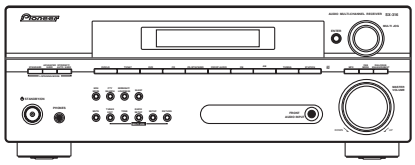

SX-316-S

ORDER NO.
**RRV3330**

## AUDIO MULTI-CHANNEL RECEIVER

# SX-316-S

**THIS MANUAL IS APPLICABLE TO THE FOLLOWINGMODEL(S) AND TYPE(S).**

| Model | Type | Power Requirement | Remarks |
|---|---|---|---|
| SX-316-S | KUCXJ | AC 120 V | |
| SX-316-S | MYXJ5 | AC 220 V to 230 V | |

For details, refer to "Important Check Points for Good Servicing".

**PIONEER CORPORATION** 4-1, Meguro 1-chome, Meguro-ku, Tokyo 153-8654, Japan
**PIONEER ELECTRONICS (USA) INC.** P.O. Box 1760, Long Beach, CA 90801-1760, U.S.A.
**PIONEER EUROPE NV** Haven 1087, Keetberglaan 1, 9120 Melsele, Belgium
**PIONEER ELECTRONICS ASIACENTRE PTE. LTD.** 253 Alexandra Road, #04-01, Singapore 159936
ⒸPIONEER CORPORATION 2006

T-ZZK MAY 2006 printed in Japan

# SAFETY INFORMATION

**This service manual is intended for qualified service technicians; it is not meant for the casual do-it-yourselfer. Qualified technicians have the necessary test equipment and tools, and have been trained to properly and safely repair complex products such as those covered by this manual.**

**Improperly performed repairs can adversely affect the safety and reliability of the product and may void the warranty. If you are not qualified to perform the repair of this product properly and safely, you should not risk trying to do so and refer the repair to a qualified service technician.**

WARNING

This product contains lead in solder and certain electrical parts contain chemicals which are known to the state of California to cause cancer, birth defects or other reproductive harm.

Health & Safety Code Section 25249.6 – Proposition 65

NOTICE

(FOR CANADIAN MODEL ONLY)

Fuse symbols (fast operating fuse) and/or (slow operating fuse) on PCB indicate that replacement parts must be of identical designation.

REMARQUE

(POUR MODÈLE CANADIEN SEULEMENT)

Les symboles de fusible (fusible de type rapide) et/ou (fusible de type lent) sur CCI indiquent que les pièces de remplacement doivent avoir la même désignation.

## (FOR USA MODEL ONLY)

### 1. SAFETY PRECAUTIONS

The following check should be performed for the continued protection of the customer and service technician.

### LEAKAGE CURRENT CHECK

Measure leakage current to a known earth ground (water pipe, conduit, etc.) by connecting a leakage current tester such as Simpson Model 229-2 or equivalent between the earth ground and all exposed metal parts of the appliance (input/output terminals, screwheads, metal overlays, control shaft, etc.). Plug the AC line cord of the appliance directly into a 120V AC 60 Hz outlet and turn the AC power switch on. Any current measured must not exceed 0.5 mA.

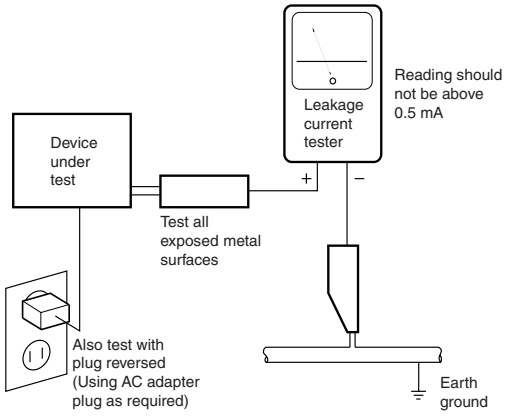


AC Leakage Test

**ANY MEASUREMENTS NOT WITHIN THE LIMITS OUTLINED ABOVE ARE INDICATIVE OF A POTENTIAL SHOCK HAZARD AND MUST BE CORRECTED BEFORE RETURNING THE APPLIANCE TO THE CUSTOMER.**

### 2. PRODUCT SAFETY NOTICE

Many electrical and mechanical parts in the appliance have special safety related characteristics. These are often not evident from visual inspection nor the protection afforded by them necessarily can be obtained by using replacement components rated for voltage, wattage, etc. Replacement parts which have these special safety characteristics are identified in this Service Manual.

Electrical components having such features are identified by marking with a ⚠ on the schematics and on the parts list in this Service Manual.

The use of a substitute replacement component which does not have the same safety characteristics as the PIONEER recommended replacement one, shown in the parts list in this Service Manual, may create shock, fire, or other hazards.

Product Safety is continuously under review and new instructions are issued from time to time. For the latest information, always consult the current PIONEER Service Manual. A subscription to, or additional copies of, PIONEER Service Manual may be obtained at a nominal charge from PIONEER.

## [Important Check Points for Good Servicing]

In this manual, procedures that must be performed during repairs are marked with the below symbol.
Please be sure to confirm and follow these procedures.

### 1. Product safety

Please conform to product regulations (such as safety and radiation regulations), and maintain a safe servicing environment by following the safety instructions described in this manual.

① Use specified parts for repair.

Use genuine parts. Be sure to use important parts for safety.

② Do not perform modifications without proper instructions.

Please follow the specified safety methods when modification(addition/change of parts) is required due to interferences such as radio/TV interference and foreign noise.

③ Make sure the soldering of repaired locations is properly performed.

When you solder while repairing, please be sure that there are no cold solder and other debris.
Soldering should be finished with the proper quantity. (Refer to the example)

④ Make sure the screws are tightly fastened.

Please be sure that all screws are fastened, and that there are no loose screws.

⑤ Make sure each connectors are correctly inserted.

Please be sure that all connectors are inserted, and that there are no imperfect insertion.

⑥ Make sure the wiring cables are set to their original state.

Please replace the wiring and cables to the original state after repairs.
In addition, be sure that there are no pinched wires, etc.

⑦ Make sure screws and soldering scraps do not remain inside the product.

Please check that neither solder debris nor screws remain inside the product.

⑧ There should be no semi-broken wires, scratches, melting, etc. on the coating of the power cord.

Damaged power cords may lead to fire accidents, so please be sure that there are no damages.
If you find a damaged power cord, please exchange it with a suitable one.

⑨ There should be no spark traces or similar marks on the power plug.

When spark traces or similar marks are found on the power supply plug, please check the connection and advise on secure connections and suitable usage. Please exchange the power cord if necessary.

⑩ Safe environment should be secured during servicing.

When you perform repairs, please pay attention to static electricity, furniture, household articles, etc. in order to prevent injuries.
Please pay attention to your surroundings and repair safely.

### 2. Adjustments

To keep the original performance of the products, optimum adjustments and confirmation of characteristics within specification.
Adjustments should be performed in accordance with the procedures/instructions described in this manual.

### 3. Lubricants, Glues, and Replacement parts

Use grease and adhesives that are equal to the specified substance.
Make sure the proper amount is applied.

### 4. Cleaning

For parts that require cleaning, such as optical pickups, tape deck heads, lenses and mirrors used in projection monitors, proper cleaning should be performed to restore their performances.

### 5. Shipping mode and Shipping screws

To protect products from damages or failures during transit, the shipping mode should be set or the shipping screws should be installed before shipment. Please be sure to follow this method especially if it is specified in this manual.

# CONTENTS


SAFETY INFORMATION ..... 2
1. SPECIFICATIONS ..... 5
2. EXPLODED VIEWS AND PARTS LIST ..... 6
2.1 PACKING ..... 6
2.2 EXTERIOR SECTION ..... 8
2.3 FRONT PANEL SECTION ..... 10
3. BLOCK DIAGRAM AND SCHEMATIC DIAGRAM ..... 12
3.1 BLOCK DIAGRAM ..... 12
3.2 OVERALL WIRING CONNECTION DIAGRAM ..... 14
3.3 MAIN ASSY (1/3) ..... 16
3.4 MAIN ASSY (2/3) ..... 18
3.5 MAIN ASSY (3/3) ..... 20
3.6 DSP ASSY (1/2) ..... 22
3.7 DSP ASSY (2/2) ..... 24
3.8 POWER PACK (1/2), TRANS 2 and TRANS 3 ASSYS ..... 26
3.9 POWER PACK (2/2) and HEADPHONE ASSYS ..... 28
3.10 FRONT DISPLAY, R. ENCODER and POWER KEY ASSYS ..... 30
3.11 TRANS 4, REGULATOR and DIGITAL IN ASSYS ..... 32
3.12 FRONT INPUT, PRIMARY and TRANS 1 ASSYS ..... 33
4. PCB CONNECTION DIAGRAM ..... 34
4.1 REGULATOR and DIGITAL IN ASSYS ..... 35
4.2 MAIN and FRONT INPUT ASSYS ..... 36
4.3 DSP ASSY ..... 40
4.4 POWER PACK ASSY ..... 44
4.5 TRANS2, TRANS3, TRANS4 and TRANS1 ASSYS ..... 48
4.6 HEAD PHONE, FRONT DISPLY, R. ENCODER and POWER KEY ASSYS ..... 50
4.7 PRIMARY ASSY ..... 54
5. PCB PARTS LIST ..... 56
6. ADJUSTMENT ..... 73
7. GENERAL INFORMATION ..... 74
7.1 DIAGNOSIS ..... 74
7.1.1 DISASSEMBLY ..... 74
7.2 PARTS ..... 77
7.2.1 IC ..... 77
7.3 EXPLANATION ..... 85
7.3.1 DETECTION CIRCUIT ..... 85
7.3.2 AMPLIFIER SYSTEM PROTECTION OPERATION SPECIFICATION ..... 87
7.3.3 AMPLIFIER FAILURE DIAGNOSIS FLOW CHART ..... 89
8. PANEL FACILITIES ..... 90

# 1. SPECIFICATIONS

SX-316-S/KUCXJ

**Amplifier section**

**Continuous power output**

Front
..... 100 W per channel* (200 Hz to 20 kHz, 0.7 %**, 8 Ω)
Center ..... 100 W*(200 Hz to 20 kHz, 0.7 %**, 8 Ω)
Surround
..... 100 W per channel*(200 Hz to 20 kHz, 0.7 %**, 8 Ω)
Subwoofer ..... 100 W*(45 Hz to 200 kHz, 0.7 %**, 8 Ω)

RMS Power Output
Front ..... 144 W per channel (1 kHz, THD, 10 %, 8 Ω)
Center ..... 144 W (1 kHz, THD, 10 %, 8 Ω)
Surround ..... 144 W per channel (1 kHz, THD, 10 %, 8 Ω)
Subwoofer ..... 144 W (1 kHz, THD, 10 %, 8 Ω)

* Measured pursuant to the Federal Trade Commission's Trade Regulation rule on Power Output Claims for Amplifiers.
** Measured by Audio Spectrum Analyzer.

**FM Tuner Section**
Frequency Range ..... 87.5 MHz to 108 MHz
Antenna Input (DIN) ..... 75 Ω unbalanced

**AM Tuner Section**
Frequency Range ..... 530 kHz to 1 700 kHz
Antenna ..... Loop antenna

**Miscellaneous**
Power requirements ..... AC 120 V / 60 Hz
Power consumption ..... 320 W / 420 VA
In standby ..... 0.5 W
Dimensions
..... 16 9/16 in. (W) x 6 1/4 in. (H) x 13 11/16 in.(D)
420 mm (W) x 158 mm(H) x 348 mm(D)
Weight (without package) 19.0 lb (8.6 kg)

**Furnished Parts**
AM loop antenna ..... 1
FM wire antenna ..... 1
AA size IEC R6 dry cell batteries (to confirm system operation) ..... 2
Remote control ..... 1
Mini-plug audio cable ..... 1
Operating instructions

**Note**
Specifications and the design are subject to possible modifications without notice, due to improvements.

Manufactured under license from Dolby Laboratories. "Dolby", "Pro Logic", and the double-D symbol are trademarks of Dolby Laboratories.

"DTS" and "DTS 96/24" are trademarks of Digital Theater Systems, Inc.

SX-316-S/MYXJ5

**Amplifier section**

Continuous Power Output (stereo)
Front . . . . . 100 W (DIN 1 kHz, THD, 1.0 %, 8 Ω)

Power Output (surround)
Front
. . . . 100 W per channel (1 kHz, 1.0 % THD, 8 Ω)
Center . . . . . 100 W (1 kHz, 1.0 % THD, 8 Ω)
Surround . . . . . 100 W per channel (1 kHz, 1.0 % THD, 8 Ω)
Subwoofer . . . .100 W (100 Hz, 1.0 % THD, 8 Ω)

RMS Power Output
Front
. . . . .130 W per channel (1 kHz, 10 % THD, 8 Ω)
Center . . . . . .130 W (1 kHz, 10 % THD, 8 Ω)
Surround . . . . . 130 W per channel (1 kHz, 10 % THD, 8 Ω)
Subwoofer . . . . 130 W (100 Hz, 10 % THD, 8 Ω)

**FM Tuner Section**
Frequency Range . . . . . 87.5 MHz to 108 MHz
Antenna Input. . . . . 75 Ω unbalanced

**AM Tuner Section**
Frequency Range . . . . . 531 kHz to 1 602 kHz
Antenna . . . . . Loop antenna

**Miscellaneous**
Power requirements
. . . . . AC 220V to 230 V, 50 Hz/ 60 Hz
Power consumption. . . . . 320 W
In standby. . . . . 0.5 W
Dimensions
. . . . . 420 mm (W) x 158 mm (H) x 348 mm (D)
Weight (without package). . . . . 8.5 kg

**Furnished Parts**
AM loop antenna . . . . . 1
FM wire antenna . . . . . 1
AA size IEC R6 dry cell batteries (to confirm system operation). . . . . 2
Remote control. . . . . 1
Warranty card. . . . . 1
Operating instructions

**Note**
- Specifications and the design are subject to possible modifications without notice, due to improvements.

## Accessories

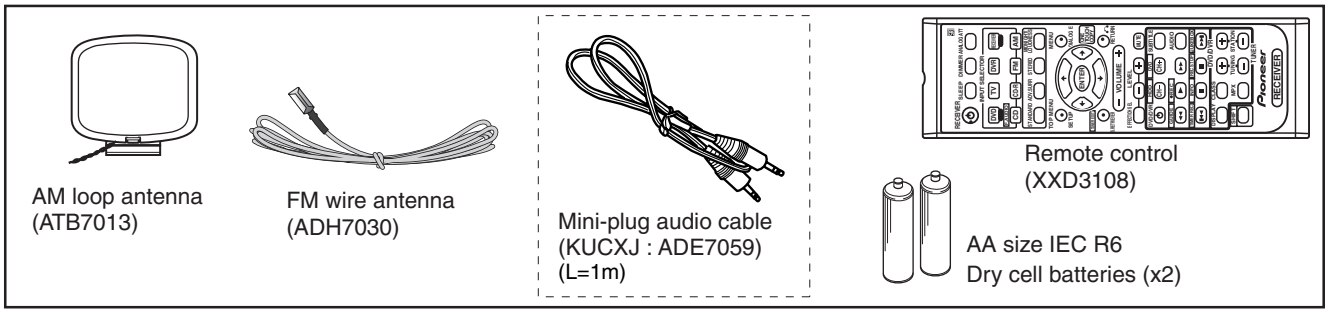

# 2. EXPLODED VIEWS AND PARTS LIST

*NOTES:*
- *Parts marked by "NSP" are generally unavailable because they are not in our Master Spare Parts List.*
- *The ⚠ mark found on some component parts indicates the importance of the safety factor of the part. Therefore, when replacing, be sure to use parts of identical designation.*
- *Screws adjacent to ▼ mark on product are used for disassembly.*
- *For the applying amount of lubricants or glue, follow the instructions in this manual. (In the case of no amount instructions, apply as you think it appropriate.)*

## 2.1 PACKING

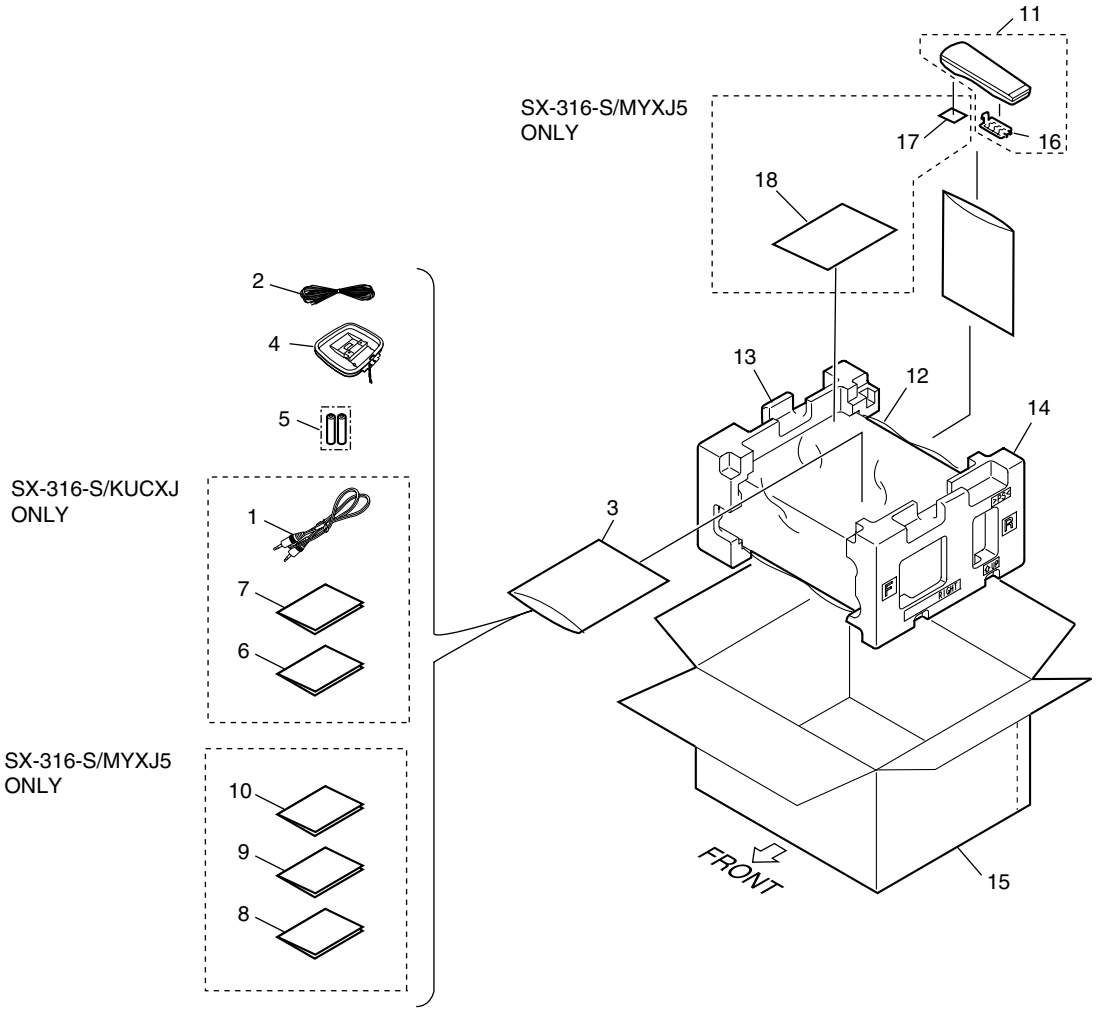

## (1) PACKING SECTION PARTS LIST

| Mark | No. | Description | Part No. |
|---|---|---|---|
| | 1 | Mini-plug Audio Cable | See Contrast table(2) |
| | 2 | FM Wire Antenna | ADH7030 |
| NSP | 3 | Polyethylene Bag | See Contrast table(2) |
| | 4 | AM Loop Antenna | ATB7013 |
| NSP | 5 | Dry cell batteries (AA/R6) 2P | XEX3002 |
| | 6 | Operating Instructions (English/French) | See Contrast table(2) |
| | 7 | Operating Instructions Safety (English/French) | See Contrast table(2) |
| | 8 | Operating Instructions (Dutch/Spanish) | See Contrast table(2) |
| | 9 | Operating Instructions (French/German) | See Contrast table(2) |
| | 10 | Operating Instructions (English/Italian) | See Contrast table(2) |
| | 11 | Remote control | XXD3108 |
| | 12 | Packing Sheet | AHG7069 |
| | 13 | Left Pad V3 | XHA3158 |
| | 14 | Right Pad V3 | XHA3159 |
| | 15 | Packing Case | See Contrast table(2) |
| | 16 | Battery Cover | XZN3139 |
| | 17 | Label (WEEE) | See Contrast table(2) |
| | 18 | Warranty Card | See Contrast table(2) |

## (2) CONTRAST TABLE

SX-316-S/MYXJ5 and SX-316-S/KUCXJ are constracted the same except for the following:

| Mark | No. | Symbol and Description | SX-316-S /KUCXJ | SX-316-S /MYXJ5 |
|---|---|---|---|---|
| | 1 | Mini-plug Audio Cable | ADE7059 | Not used |
| NSP | 3 | Polyethylene Bag | AHG7117 | Z21-038 |
| | 6 | Operating Instructions (English/French) | XRE3113 | Not used |
| | 7 | Operating Instructions Safety (English/French) | XRE3120 | Not used |
| | 8 | Operating Instructions (Dutch/Spanish) | Not used | XRC3221 |
| | 9 | Operating Instructions (French/German) | Not used | XRC3222 |
| | 10 | Operating Instructions (English/Italian) | Not used | XRE3115 |
| | 15 | Packing Case | XHD3586 | XHD3593 |
| | 17 | Label (WEEE) | Not used | ARW7322 |
| | 18 | Warranty Card | Not used | ARY7065 |

## 2.2 EXTERIOR SECTION

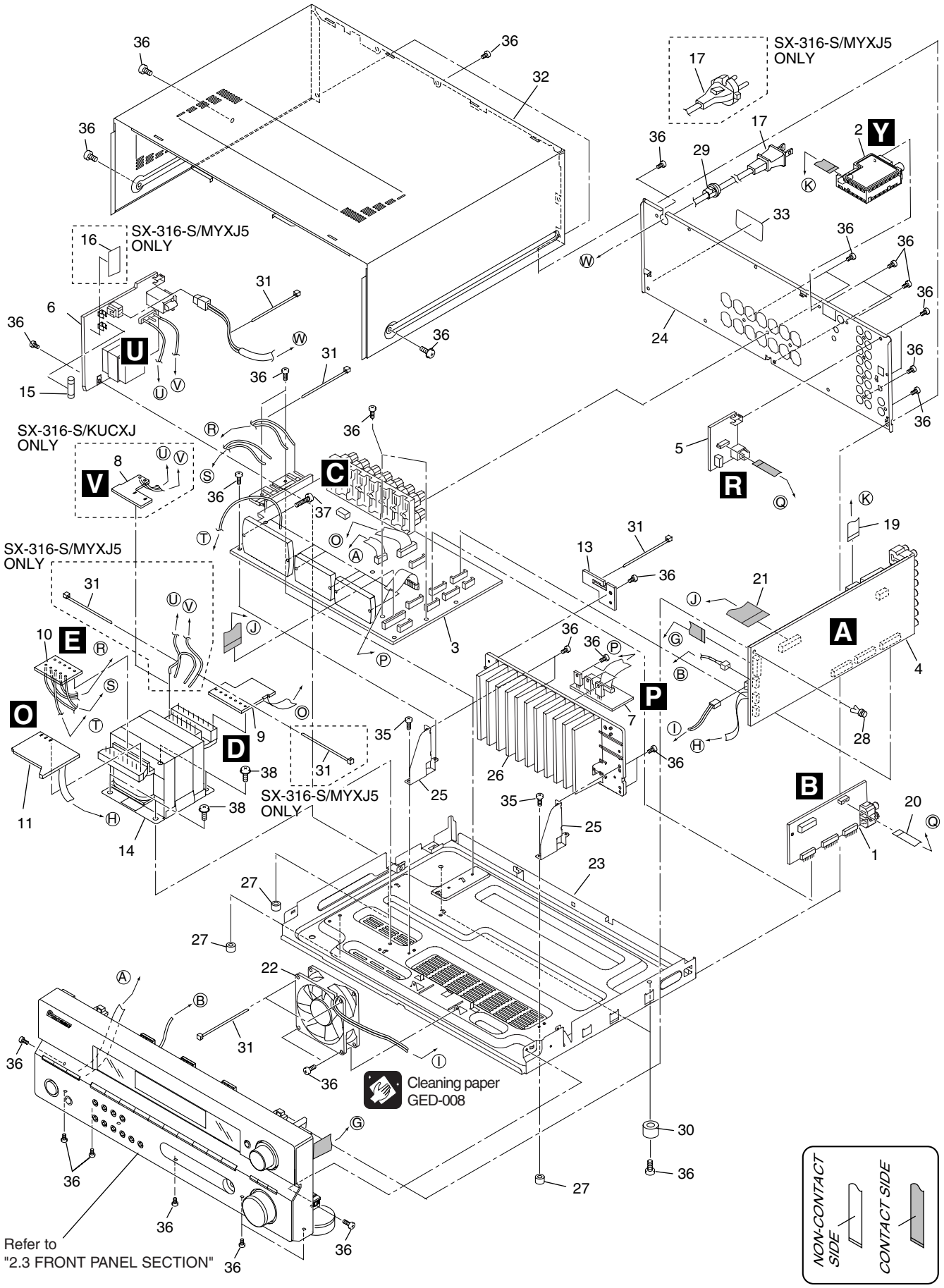

## (1) EXTERIOR SECTION PARTS LIST

| Mark | No. | Description | Part No. |
|---|---|---|---|
| | 1 | DSP ASSY | AWX8573 |
| | 2 | FM/AM TUNER UNIT | See Contrast table(2) |
| | 3 | POWER PACK ASSY | See Contrast table(2) |
| | 4 | MAIN ASSY | See Contrast table(2) |
| | 5 | DIGITAL IN ASSY | XWZ4066 |
| | 6 | PRIMARY ASSY | See Contrast table(2) |
| | 7 | REGULATOR ASSY | XWZ4077 |
| | 8 | TRANS 1 ASSY | See Contrast table(2) |
| | 9 | TRANS 2 ASSY | See Contrast table(2) |
| | 10 | TRANS 3 ASSY | XWZ4079 |
| | 11 | TRANS 4 ASSY | XWZ4093 |
| | 12 | •••••• | |
| | 13 | BINDER ASSY | XWZ4199 |
| ⚠ | 14 | Transformer | See Contrast table(2) |
| ⚠ | 15 | Fuse | See Contrast table(2) |
| | 16 | Fuse Card | See Contrast table(2) |
| ⚠ | 17 | AC Power Cord | See Contrast table(2) |
| | 18 | •••••• | |
| | 19 | 11P F. F. C/30V | XDD3189 |
| | 20 | 10P F. F. C/30V | XDD3196 |
| | 21 | 17P F. F. C/30V | XDD3203 |
| | 22 | DC Fan Motor | XXM3012 |
| NSP | 23 | Chassis | XNA3026 |
| | 24 | R Panel | See Contrast table(2) |
| | 25 | H/S AngleV3 | XNG3145 |
| NSP | 26 | H/Sink | XNH3044 |
| NSP | 27 | Spacer | AEB7092 |
| | 28 | Push Rivet (BROWN) | AEC7205 |
| | 29 | Cord Stopper | See Contrast table(2) |
| | 30 | Insulator | XMR3100 |
| NSP | 31 | Binder (BK-1) | ZCA-BK1 |
| | 32 | Bonnet | XZN3184 |
| NSP | 33 | Label | VRW1629 |
| | 34 | •••••• | |
| | 35 | Screw | BBZ30P060FCC |
| | 36 | Screw | BBZ30P080FNI |
| | 37 | Screw | BBZ30P140FTC |
| | 38 | Screw | BBZ40P080FNI |

## (2) CONTRAST TABLE

SX-316-S/MYXJ5 and SX-316-S/KUCXJ are constracted the same except for the following:

| Mark | No. | Symbol and Description | SX-316-S /KUCXJ | SX-316-S /MYXJ5 |
|---|---|---|---|---|
| | 2 | FM/AM TUNER UNIT | AXX7210 | AXX7170 |
| | 3 | POWER PACK ASSY | XWZ4080 | XWZ4117 |
| | 4 | MAIN ASSY | XWK3227 | XWK3244 |
| | 6 | PRIMARY ASSY | XWZ4128 | XWZ4073 |
| | 8 | TRANS 1 ASSY | XWZ4078 | Not used |
| | 9 | TRANS 2 ASSY | XWZ4090 | XWZ4092 |
| ⚠ | 14 | Transformer | XTS3106 | XTS3090 |
| ⚠ | 15 | Fuse (10A) | REK1154 | Not used |
| ⚠ | 15 | Fuse (T3.15A) | Not used | REK1027 |
| | 16 | Fuse Card | Not used | AAX7493 |
| ⚠ | 17 | AC Power Cord | ADG7024 | VDG1080 |
| | 24 | R Panel | XNC3420 | XNC3421 |
| | 29 | Cord Stopper | CM-22C | CM-22B |

## 2.3 FRONT PANEL SECTION

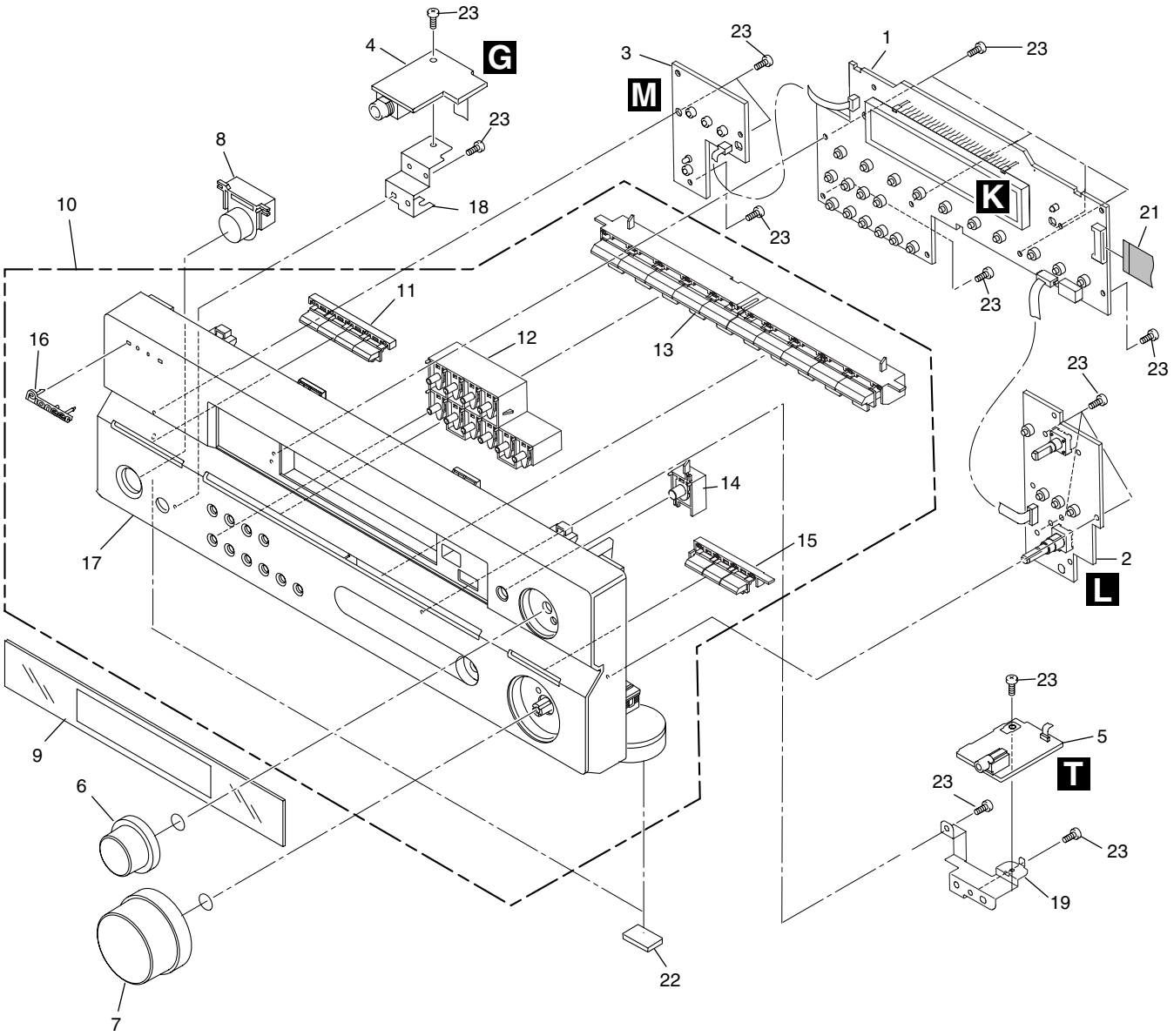


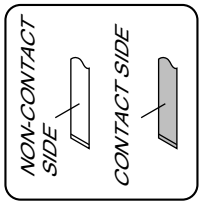

## (1) FRONT PANEL SECTION PARTS LIST

| Mark | No. | Description | Part No. |
|---|---|---|---|
| | 1 | FRONT DISPLAY ASSY | XWZ4165 |
| | 2 | R. ENCODER ASSY | XWZ4055 |
| | 3 | POWER KEY ASSY | XWZ4056 |
| | 4 | HP ASSY | XWZ4095 |
| | 5 | FRONT INPUT ASSY | XWZ4124 |
| | 6 | JOG Knob | XAB3048 |
| | 7 | VOL Knob | XAB3051 |
| | 8 | STDBY BTN | XAD3203 |
| | 9 | D Panel V3CL | XAK3529 |
| NSP | 10 | F PANEL Assy | See Contrast table(2) |
| | 11 | Tuner BTN | XAD3248 |
| | 12 | SUB BTN | XAD3249 |
| | 13 | FUNC BTN | XAD3250 |
| | 14 | JOG Button | XAD3251 |
| | 15 | JOG Button | XAD3252 |
| | 16 | PIONEER Badge | VAM1129 |
| | 17 | FRT Panel | See Contrast table(2) |
| | 18 | Earth Plate HP V2 | XNG3131 |
| | 19 | Earth Plate FR V3 | XNG3144 |
| | 20 | •••••• | |
| | 21 | 17P F.F.C/30V | XDD3200 |
| | 22 | Rubber Sheet | AEB1111 |
| | 23 | Screw | BPZ30P080FTC |

## (2) CONTRAST TABLE

SX-316-S/MYXJ5 and SX-316-S/KUCXJ are constracted the same except for the following:

| Mark | No. | Symbol and Description | SX-316-S /KUCXJ | SX-316-S /MYXJ5 |
|---|---|---|---|---|
| NSP | 10 | F Panel Assy | XXG3257 | XXG3258 |
| | 17 | FRT Panel | XMB3236 | XMB3237 |

# 3. BLOCK DIAGRAM AND SCHEMATIC DIAGRAM

## 3.1 BLOCK DIAGRAM

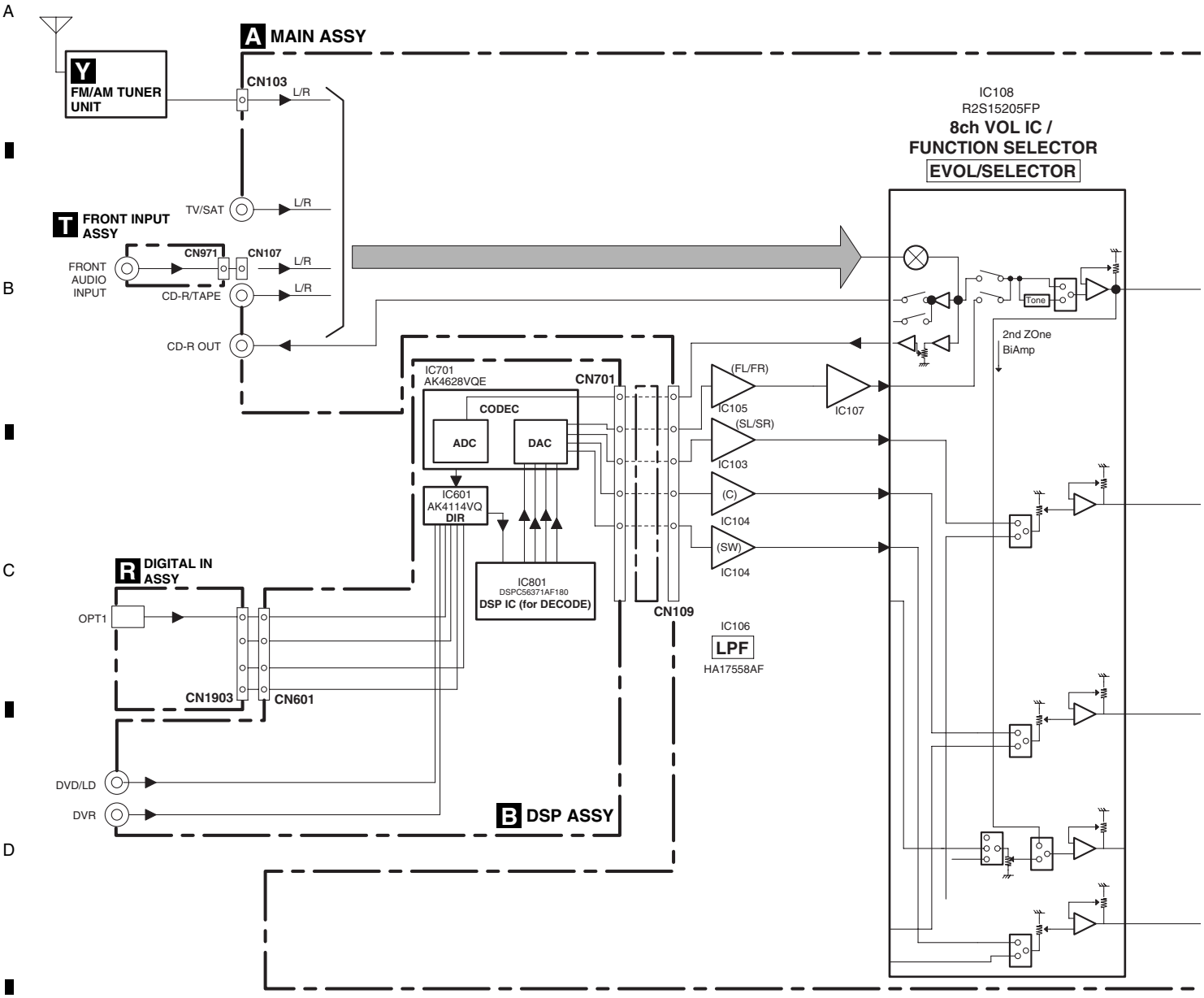

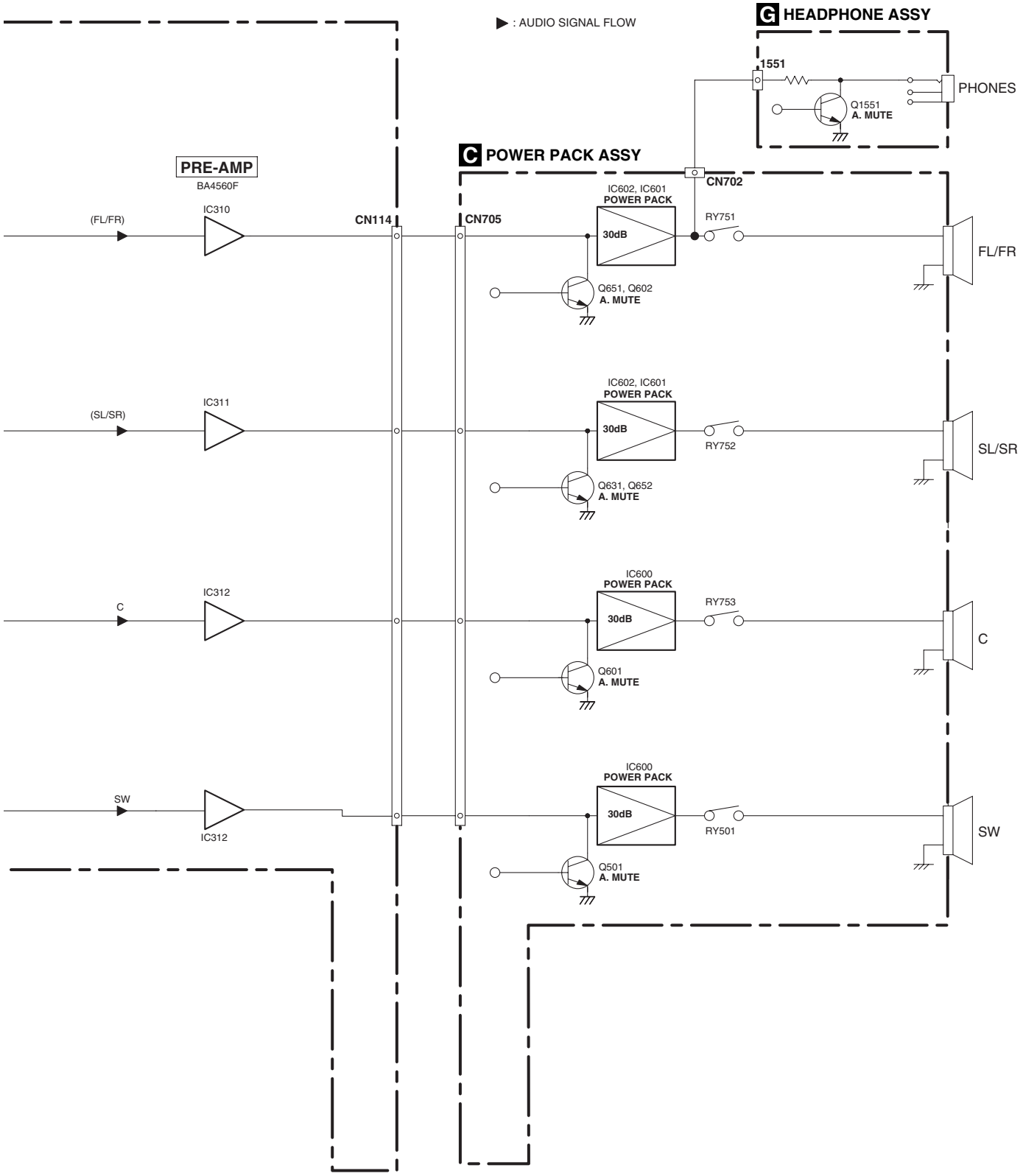
▶ : AUDIO SIGNAL FLOW
G HEADPHONE ASSY
1551
PHONES
Q1551
A. MUTE
C POWER PACK ASSY
CN702
PRE-AMP
BA4560F
(FL/FR)
IC310
CN114
CN705
IC602, IC601
POWER PACK
30dB
RY751
FL/FR
Q651, Q602
A. MUTE
(SL/SR)
IC311
IC602, IC601
POWER PACK
30dB
RY752
SL/SR
Q631, Q652
A. MUTE
C
IC312
IC600
POWER PACK
30dB
RY753
C
Q601
A. MUTE
SW
IC312
IC600
POWER PACK
30dB
RY501
SW
Q501
A. MUTE

# 3.2 OVERALL WIRING CONNECTION DIAGRAM

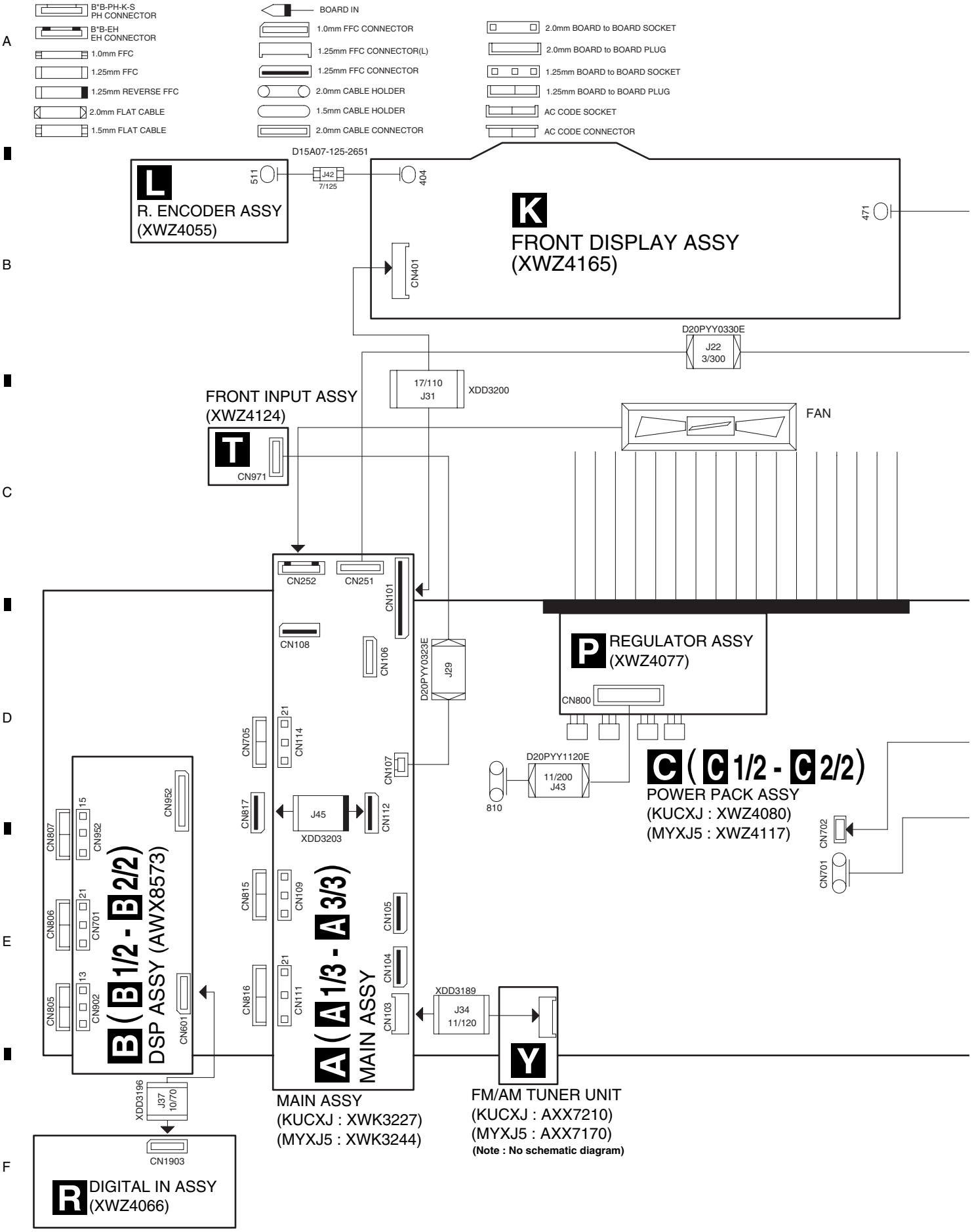

- When ordering service parts, be sure to refer to "EXPLODED VIEWS and PARTS LIST" or "PCB PARTS LIST".
- The ⚠ mark found on some component parts indicates the importance of the safety factor of the part. Therefore, when replacing, be sure to use parts of identical designation.
- : The power supply is shown with the marked box.

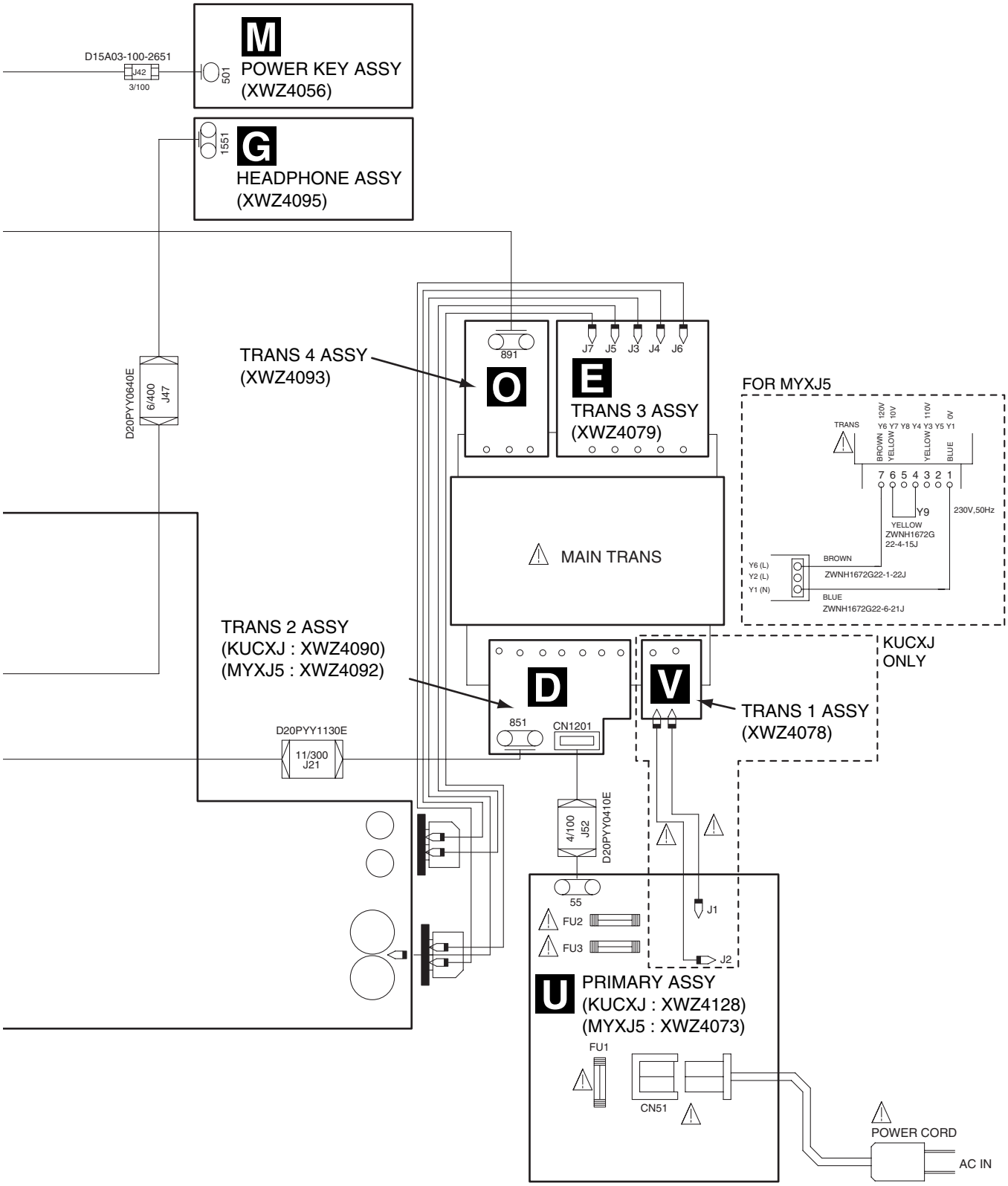

# 3.3 MAIN ASSY (1/3)

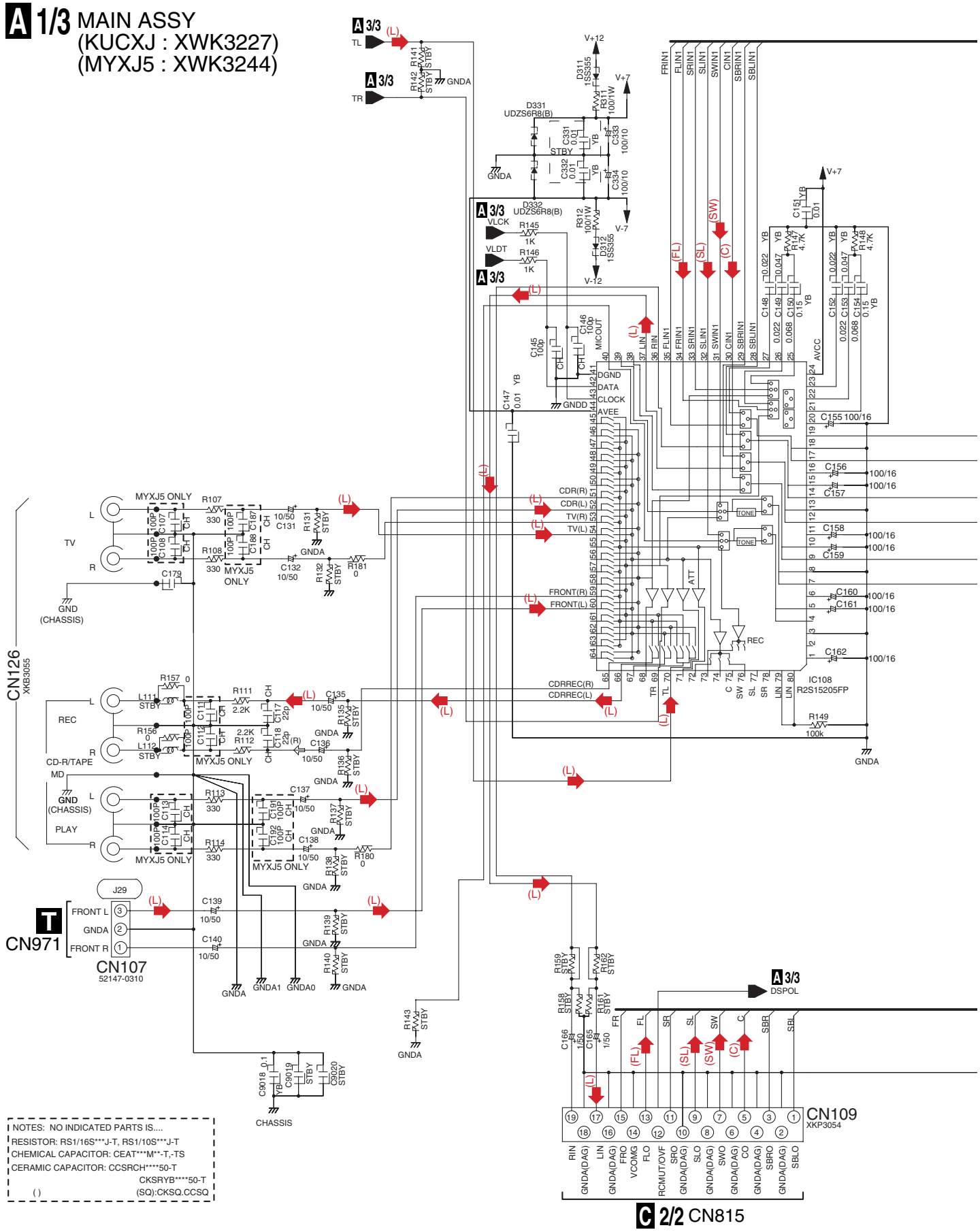


A 1/3

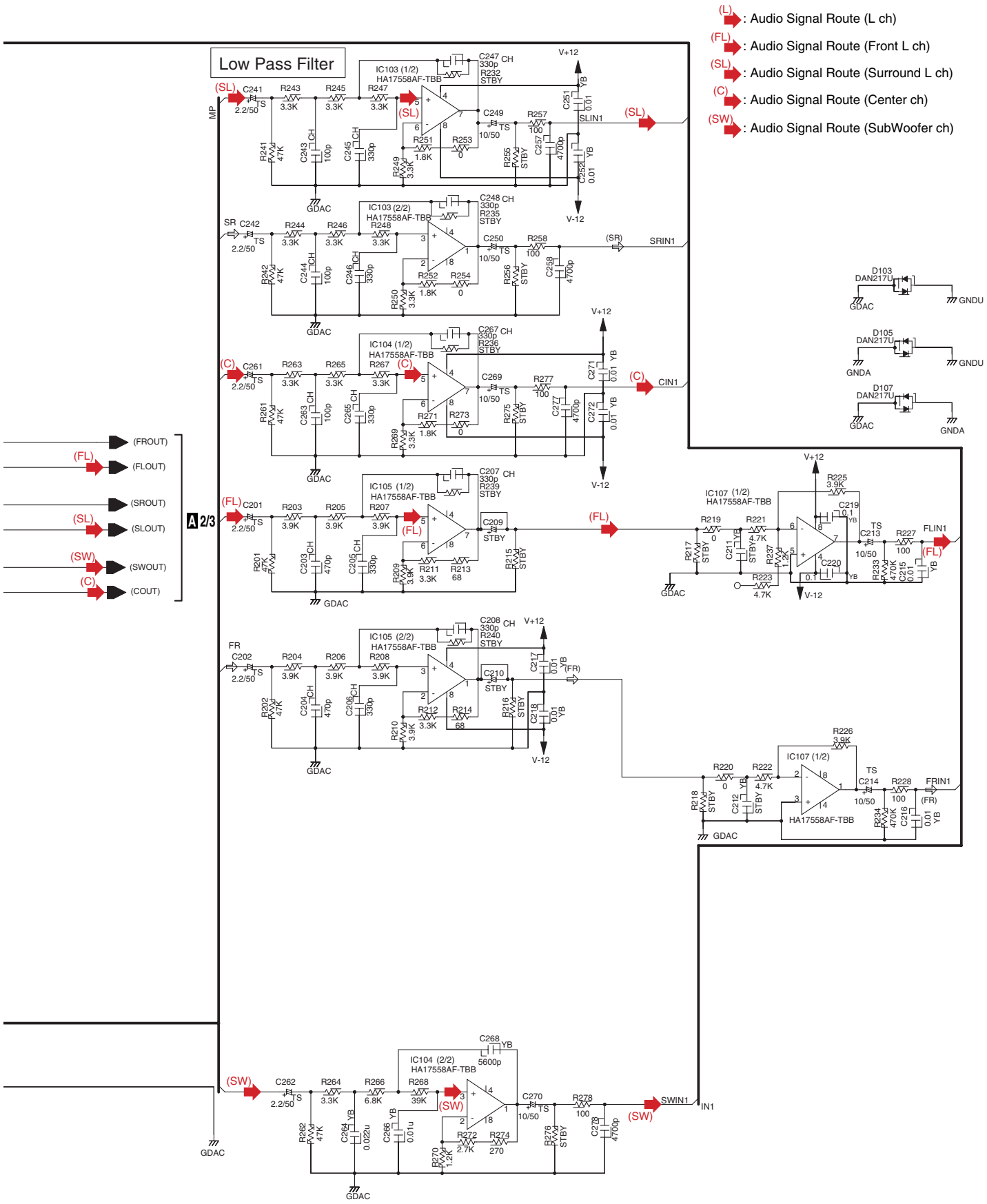
(L) : Audio Signal Route (L ch)
(FL) : Audio Signal Route (Front L ch)
(SL) : Audio Signal Route (Surround L ch)
(C) : Audio Signal Route (Center ch)
(SW) : Audio Signal Route (SubWoofer ch)
Low Pass Filter
IC103 (1/2) HA17558AF-TBB
IC103 (2/2) HA17558AF-TBB
IC104 (1/2) HA17558AF-TBB
IC105 (1/2) HA17558AF-TBB
IC105 (2/2) HA17558AF-TBB
IC104 (2/2) HA17558AF-TBB
IC107 (1/2) HA17558AF-TBB
IC107 (1/2) HA17558AF-TBB
SLIN1
SRIN1
CIN1
FLIN1
FRIN1
SWIN1
IN1
(FROUT)
(FLOUT)
(SROUT)
(SLOUT)
(SWOUT)
(COUT)
A 2/3
D103 DAN217U
D105 DAN217U
D107 DAN217U
GDAC
GNDU
GNDA
V+12
V-12

A 1/3

# 3.4 MAIN ASSY (2/3)

## A 2/3 MAIN ASSY
(KUCXJ : XWK3227)
(MYXJ5 : XWK3244)

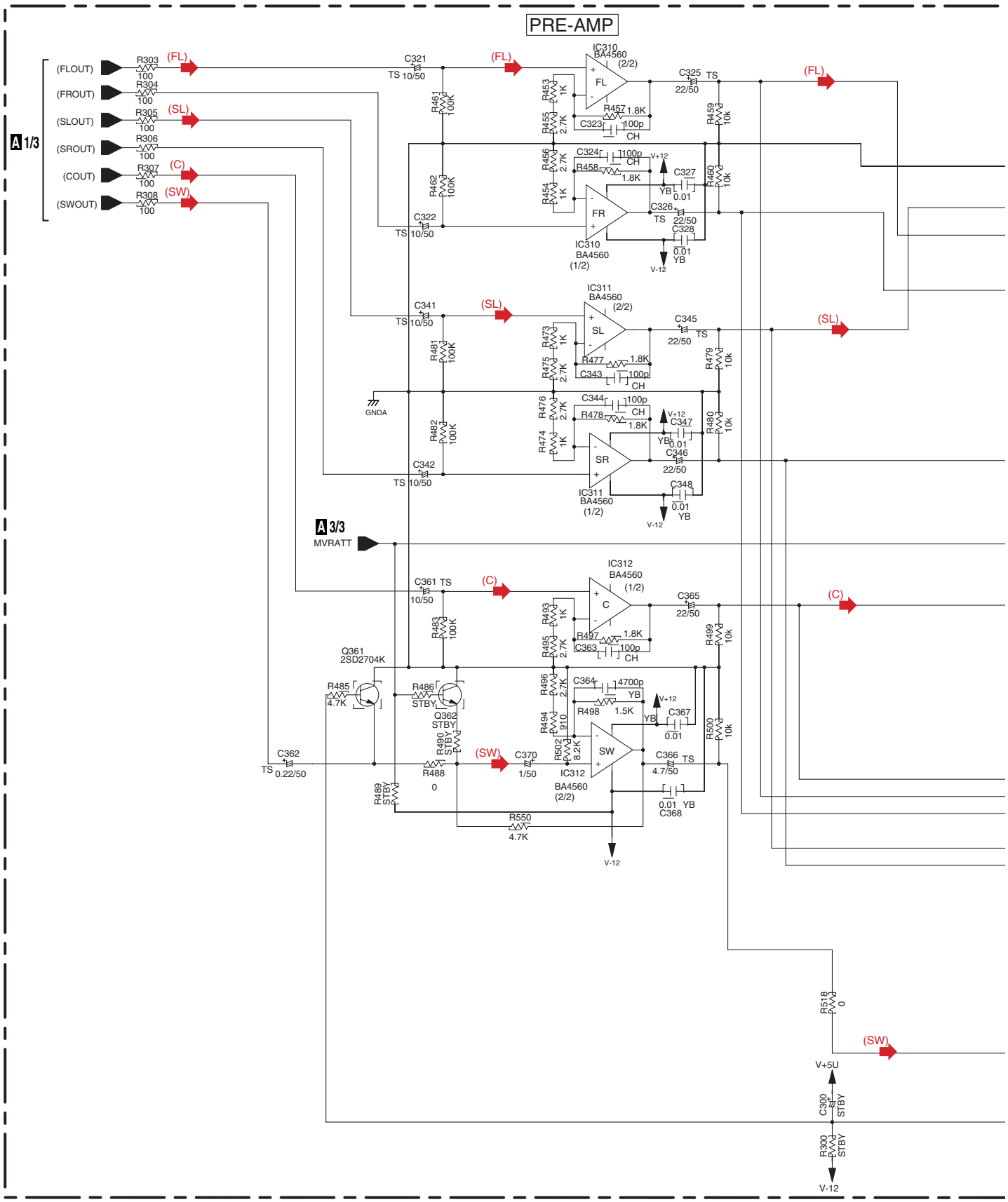


A 2/3

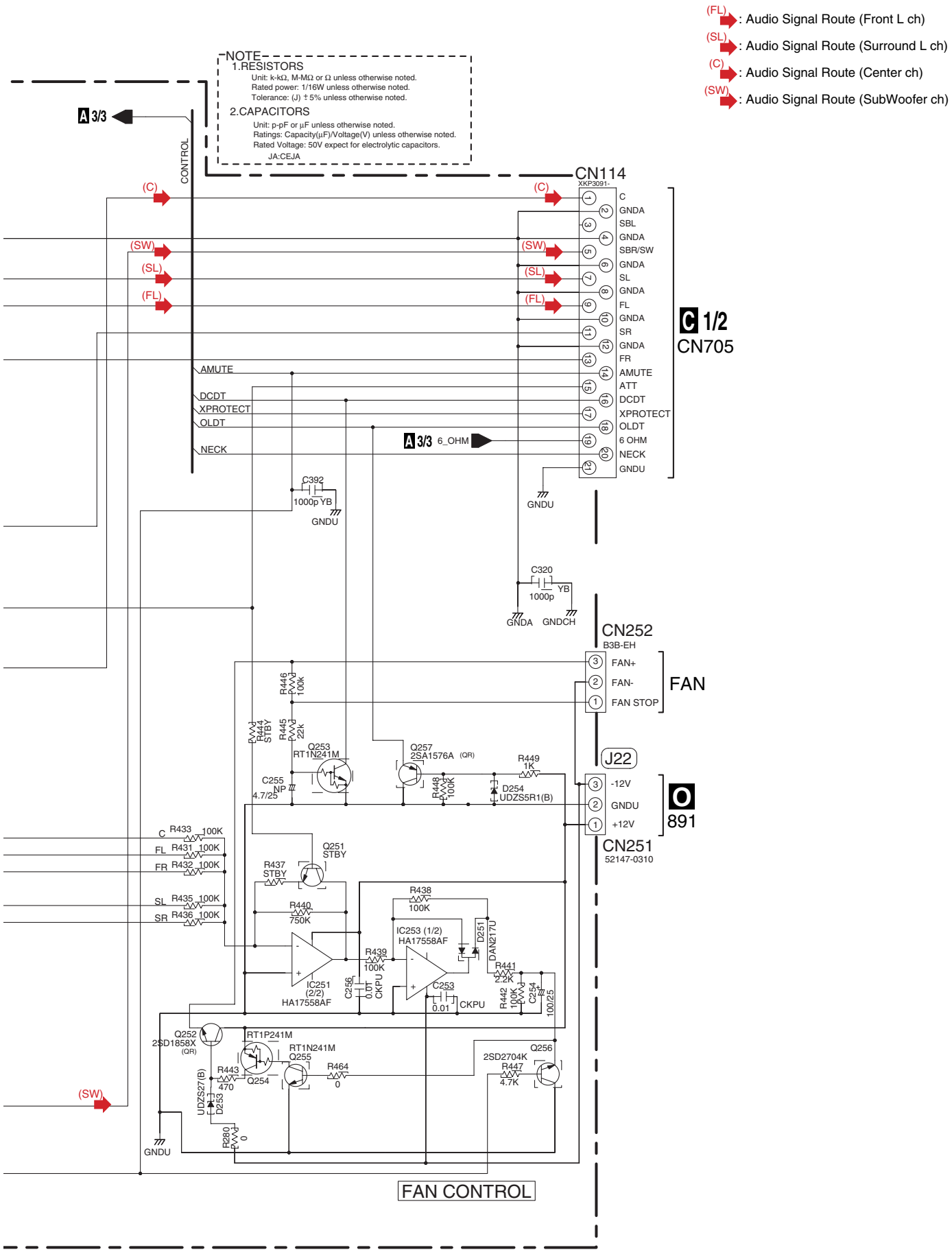
(FL): Audio Signal Route (Front L ch)
(SL): Audio Signal Route (Surround L ch)
(C): Audio Signal Route (Center ch)
(SW): Audio Signal Route (SubWoofer ch)
NOTE
1.RESISTORS
Unit: k-kΩ, M-MΩ or Ω unless otherwise noted.
Rated power: 1/16W unless otherwise noted.
Tolerance: (J) ±5% unless otherwise noted.
2.CAPACITORS
Unit: p-pF or µF unless otherwise noted.
Ratings: Capacity(µF)/Voltage(V) unless otherwise noted.
Rated Voltage: 50V expect for electrolytic capacitors.
JA:CEJA
A 3/3
CONTROL
CN114
XKP3091-
C
GNDA
SBL
GNDA
SBR/SW
GNDA
SL
GNDA
FL
GNDA
SR
GNDA
FR
AMUTE
ATT
DCDT
XPROTECT
OLDT
6 OHM
NECK
GNDU
C 1/2
CN705
AMUTE
DCDT
XPROTECT
OLDT
NECK
A 3/3 6_OHM
C392
1000p YB
GNDU
C320
1000p YB
GNDA GNDCH
CN252
B3B-EH
FAN+
FAN-
FAN STOP
FAN
R446 100k
R444 STBY
R445 22k
Q253 RT1N241M
Q257 2SA1576A (QR)
R449 1K
C255 NP 4.7/25
R448 100K
D254 UDZS5R1(B)
J22
-12V
GNDU
+12V
O 891
CN251
52147-0310
R433 100K
R431 100K
R432 100K
R435 100K
R436 100K
Q251 STBY
R437 STBY
R440 750K
R438 100K
IC253 (1/2) HA17558AF
D251 DAN217U
R439 100K
IC251 (2/2) HA17558AF
C256 0.01 CKPU
C253 0.01 CKPU
R441 2.2K
R442 100K
C254 100/25
Q252 2SD1858X (QR)
RT1P241M
RT1N241M Q255
Q254
R443 470
R464 0
Q256 2SD2704K
R447 4.7K
UDZS27(B) D253
R280 0
GNDU
FAN CONTROL

A 2/3

# 3.5 MAIN ASSY (3/3)

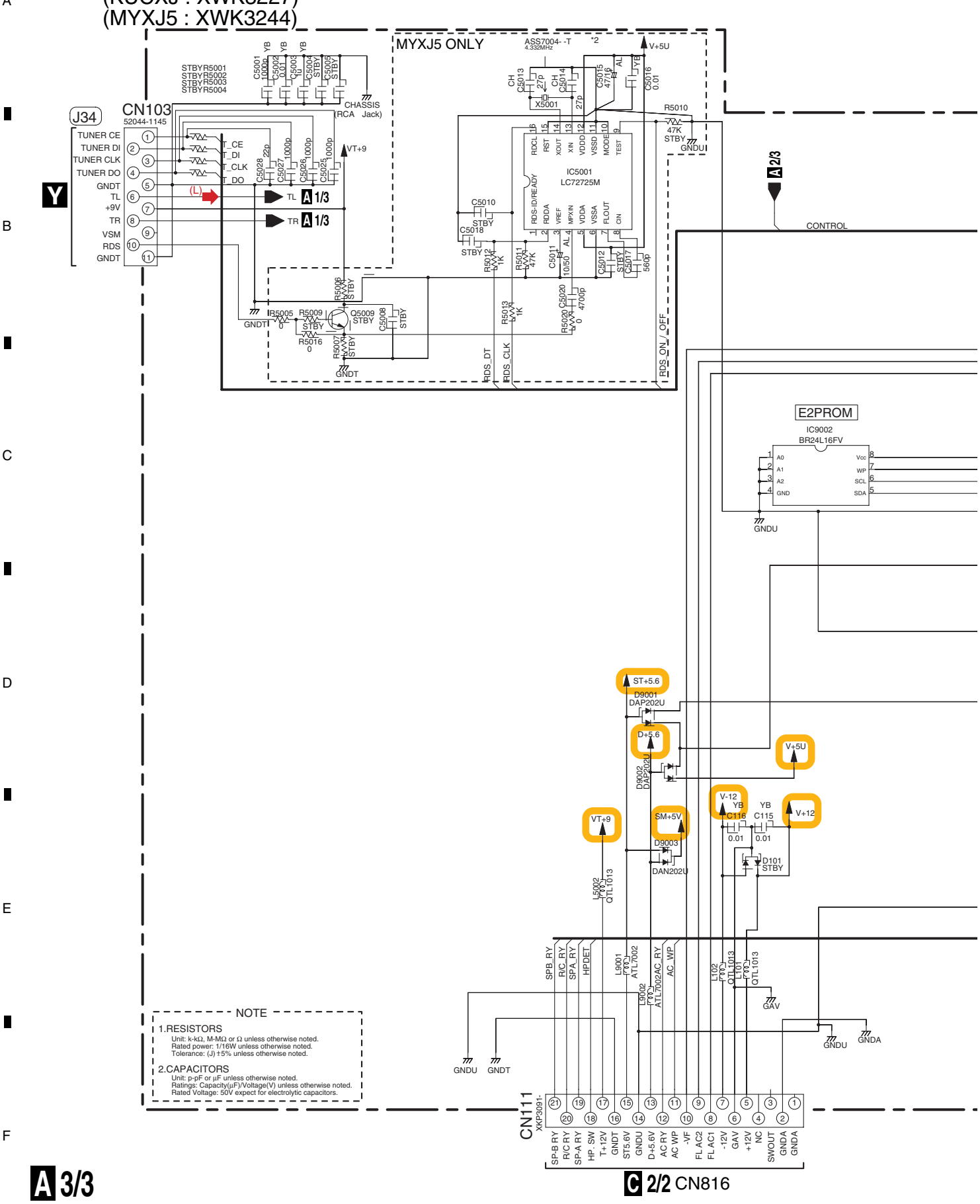

(L) : Audio Signal Route (L ch)

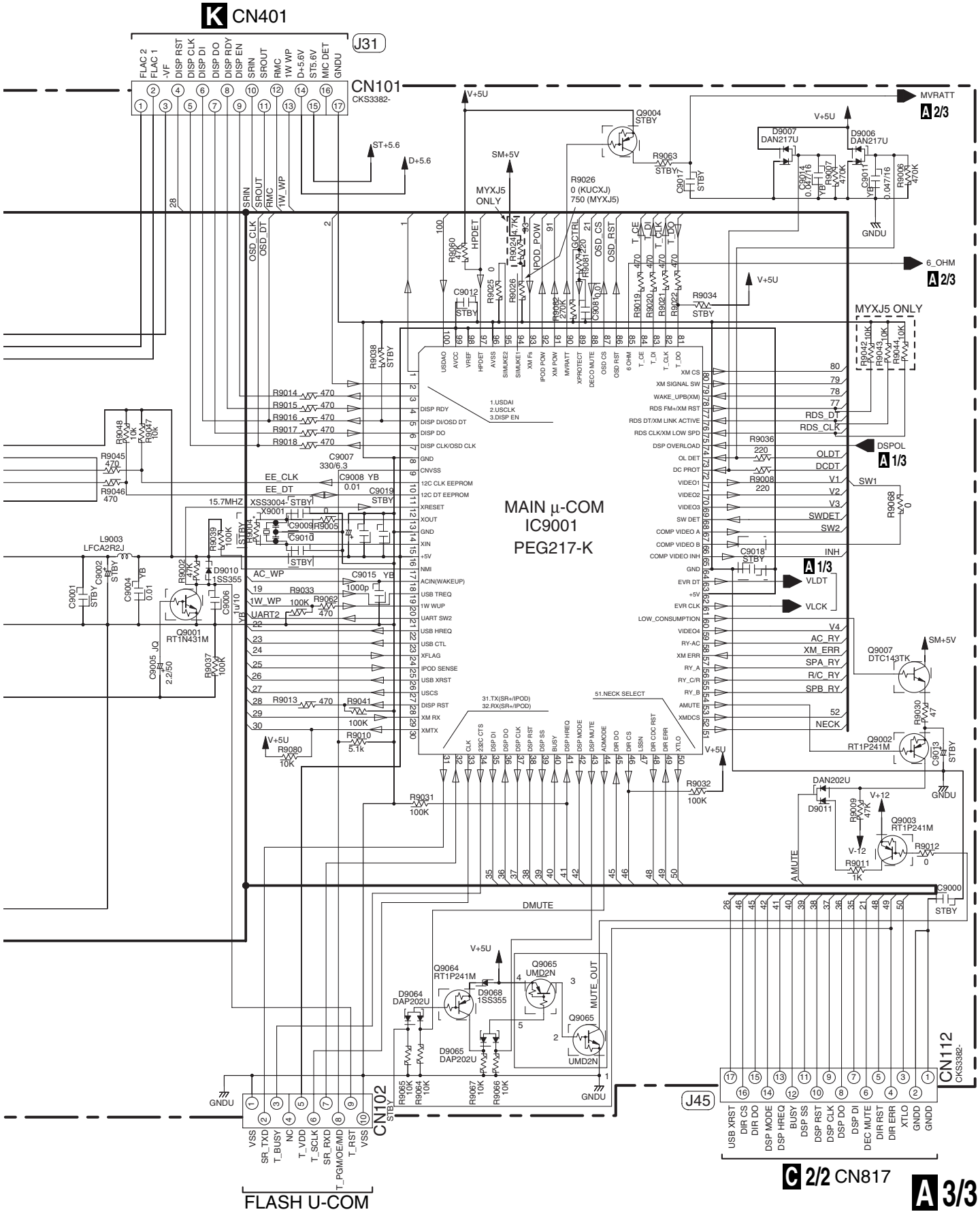

# 3.6 DSP ASSY (1/2)

## B 1/2 DSP ASSY (AWX8573)

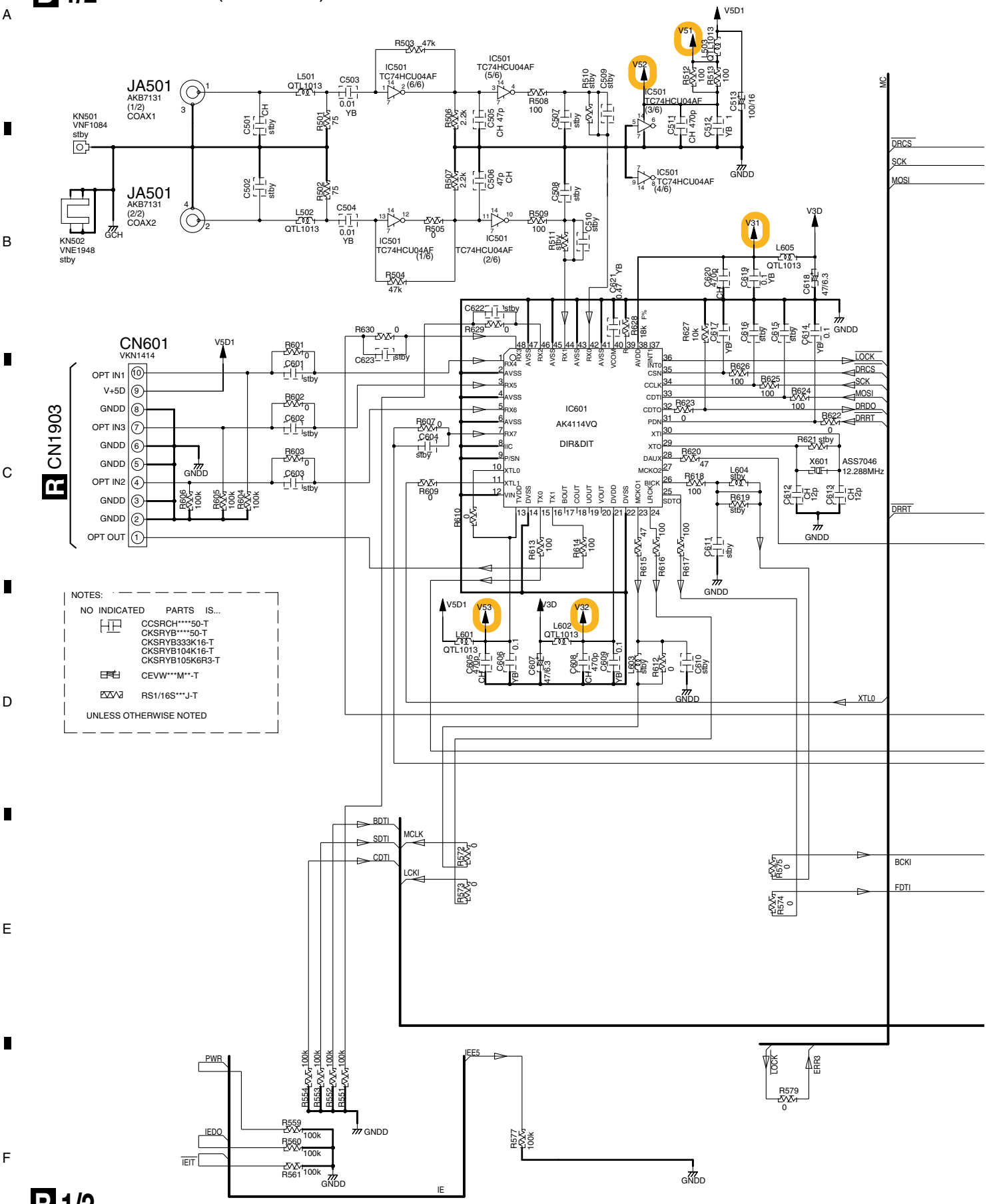


B 1/2

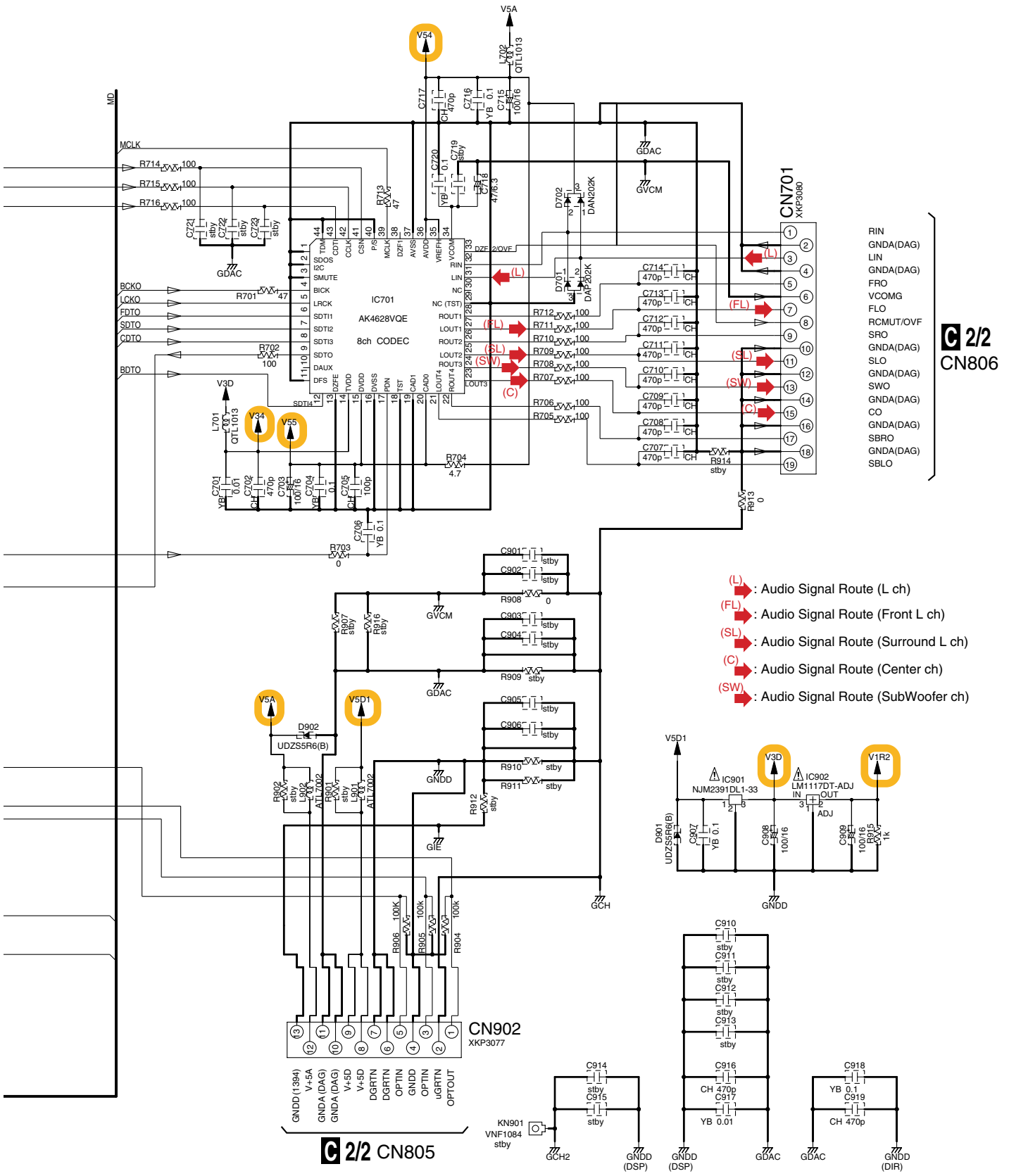
IC701
AK4628VQE
8ch CODEC
CN701
XKP3080
CN806
C 2/2
CN902
XKP3077
C 2/2 CN805
IC901
NJM2391DL1-33
IC902
LM1117DT-ADJ
(L): Audio Signal Route (L ch)
(FL): Audio Signal Route (Front L ch)
(SL): Audio Signal Route (Surround L ch)
(C): Audio Signal Route (Center ch)
(SW): Audio Signal Route (SubWoofer ch)
B 1/2

# 3.7 DSP ASSY (2/2)

## B 2/2 DSP ASSY (AWX8573)

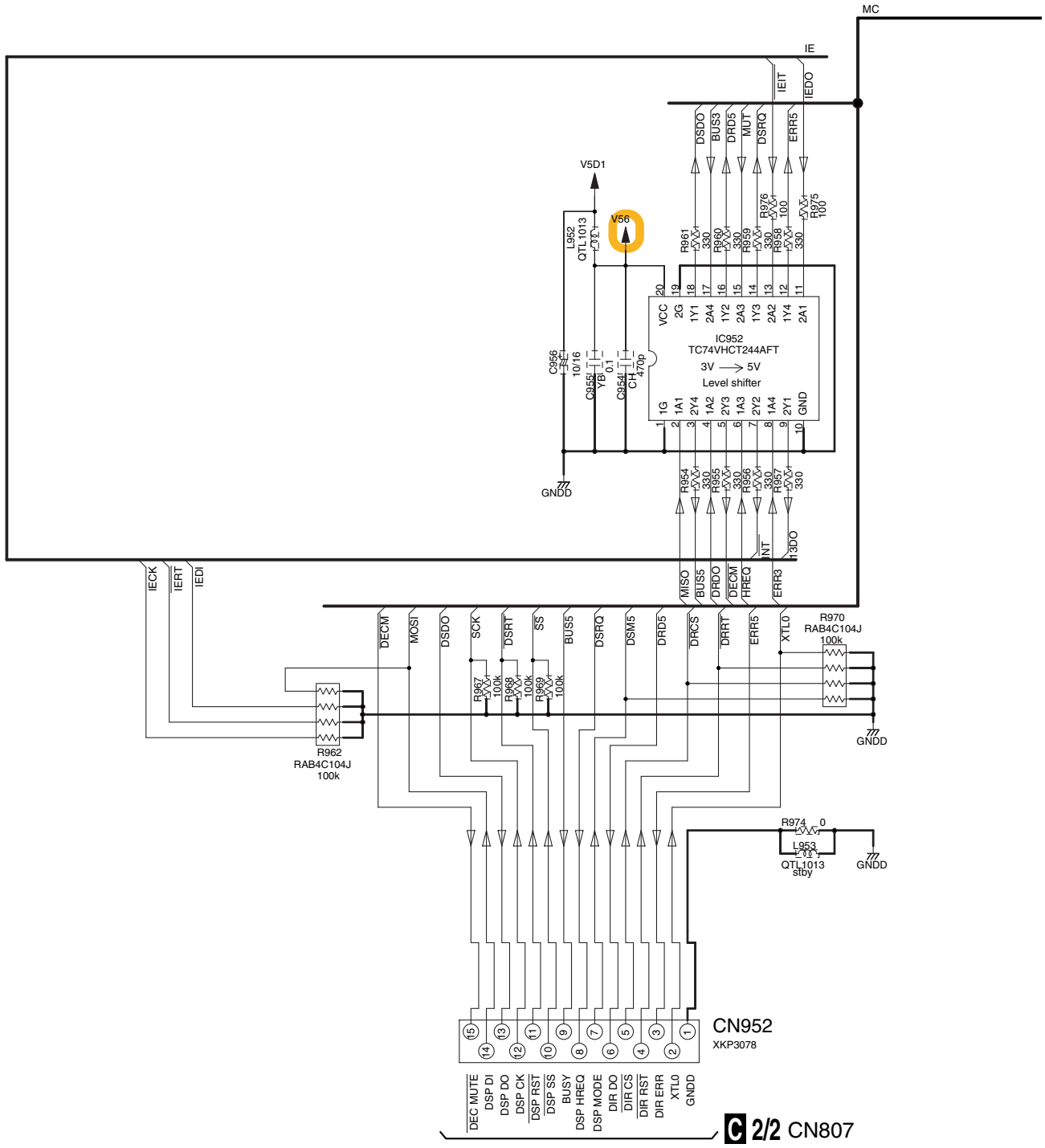


B 2/2

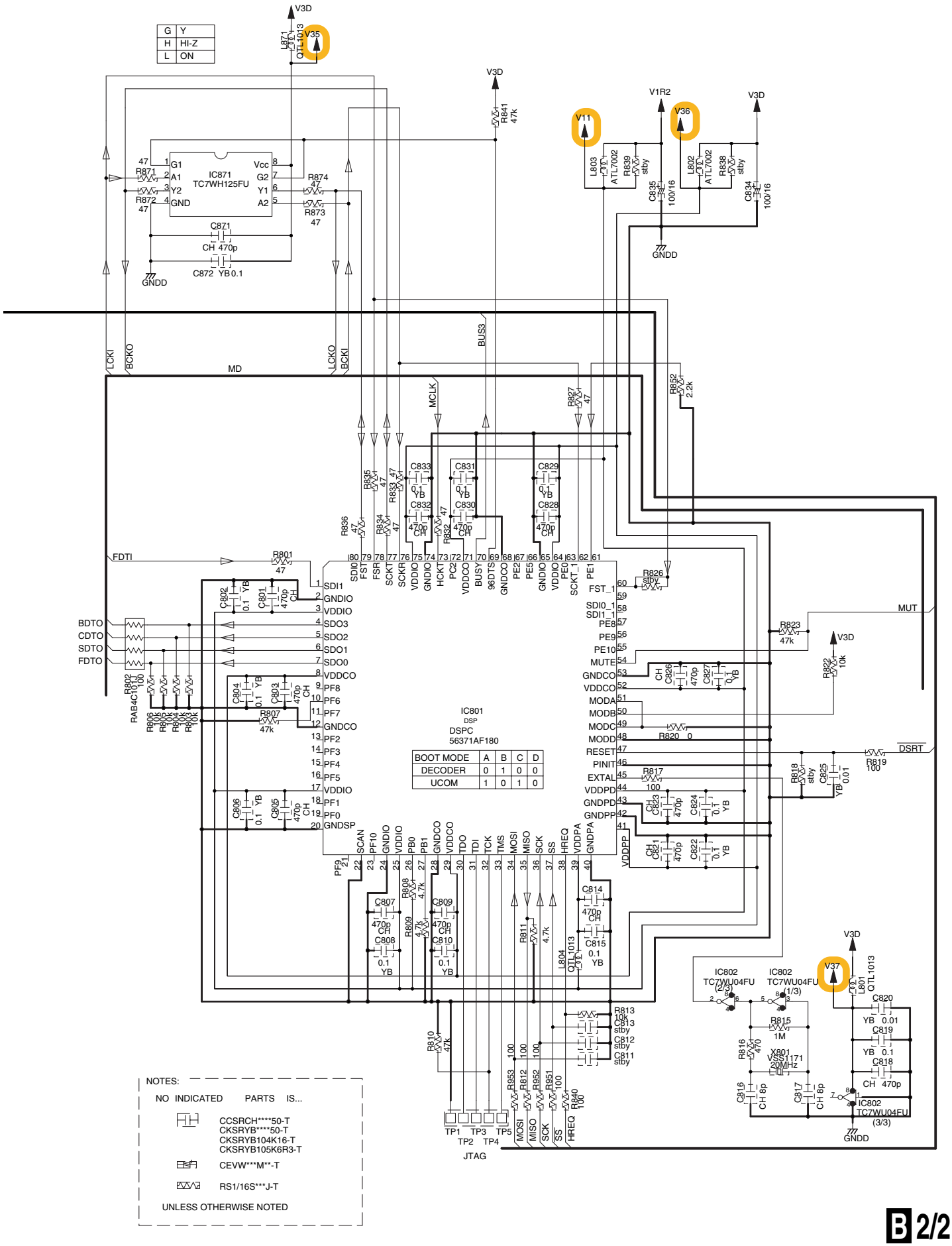


| G | Y |
|---|---|
| H | HI-Z |
| L | ON |

| BOOT MODE | A | B | C | D |
|---|---|---|---|---|
| DECODER | 0 | 1 | 0 | 0 |
| UCOM | 1 | 0 | 1 | 0 |

NOTES:

NO INDICATED PARTS IS...

CCSRCH****50-T
CKSRYB****50-T
CKSRYB104K16-T
CKSRYB105K6R3-T

CEVW***M**-T

RS1/16S***J-T

UNLESS OTHERWISE NOTED

B 2/2

# 3.8 POWER PACK (1/2), TRANS 2 and TRANS 3 ASSYS

## C 1/2 POWER PACK ASSY (KUCXJ : XWZ4080) (MYXJ5 : XWZ4117)

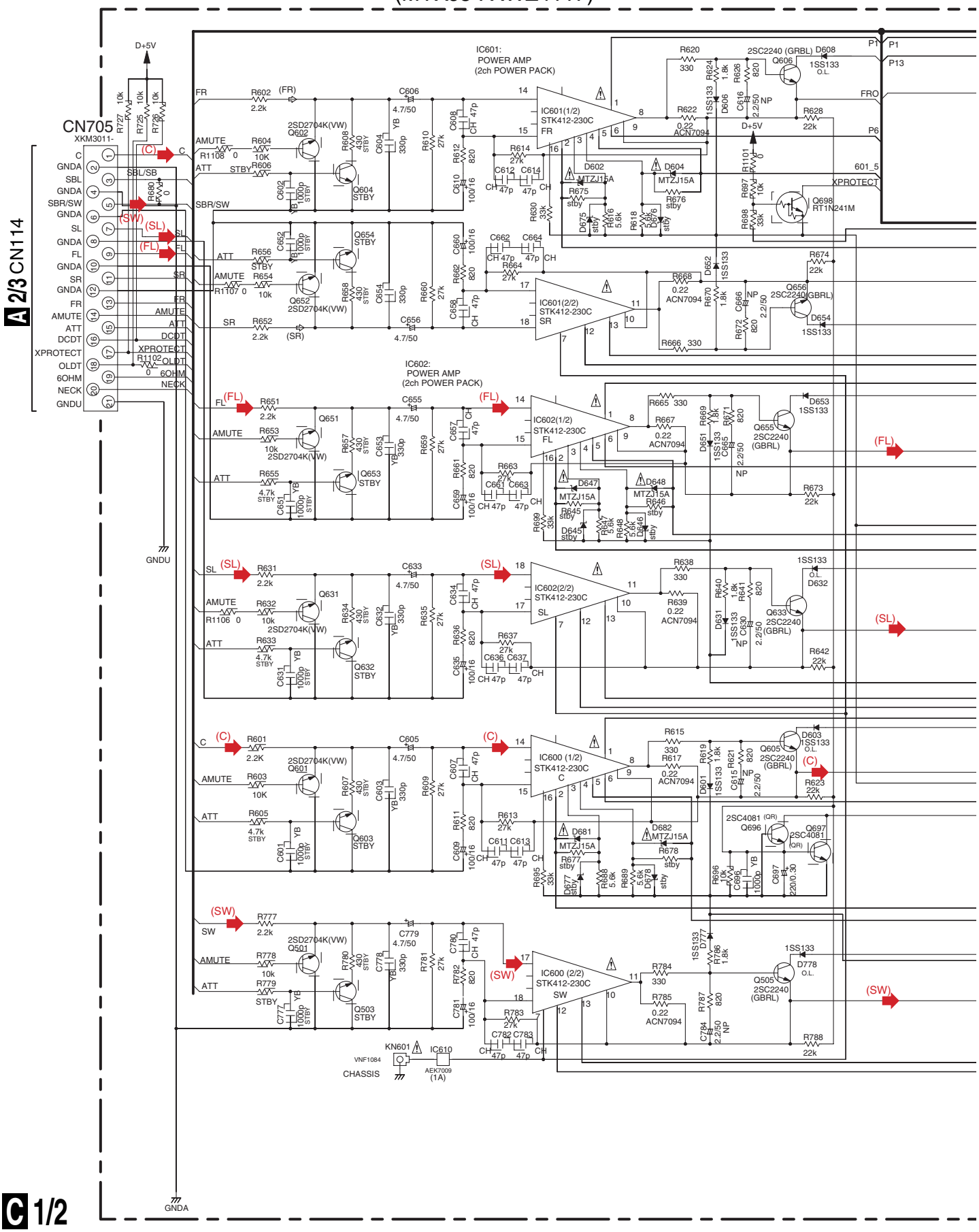


C 1/2

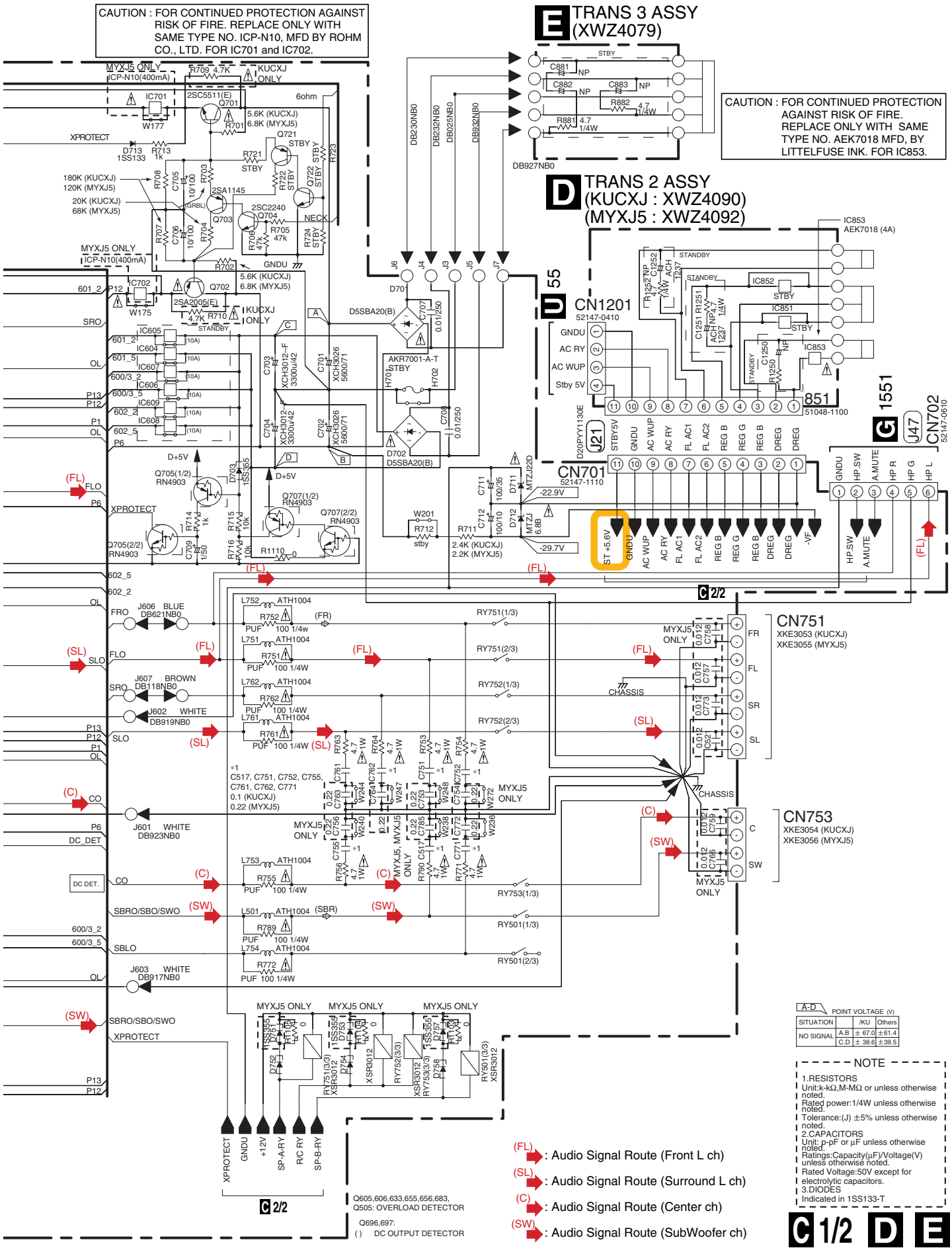


| A-D POINT VOLTAGE (V) | | | |
|---|---|---|---|
| SITUATION | | /KU | Others |
| NO SIGNAL | A.B | ± 67.0 | ±61.4 |
| | C.D | ± 38.6 | ±39.5 |

# 3.9 POWER PACK (2/2) and HEADPHONE ASSYS

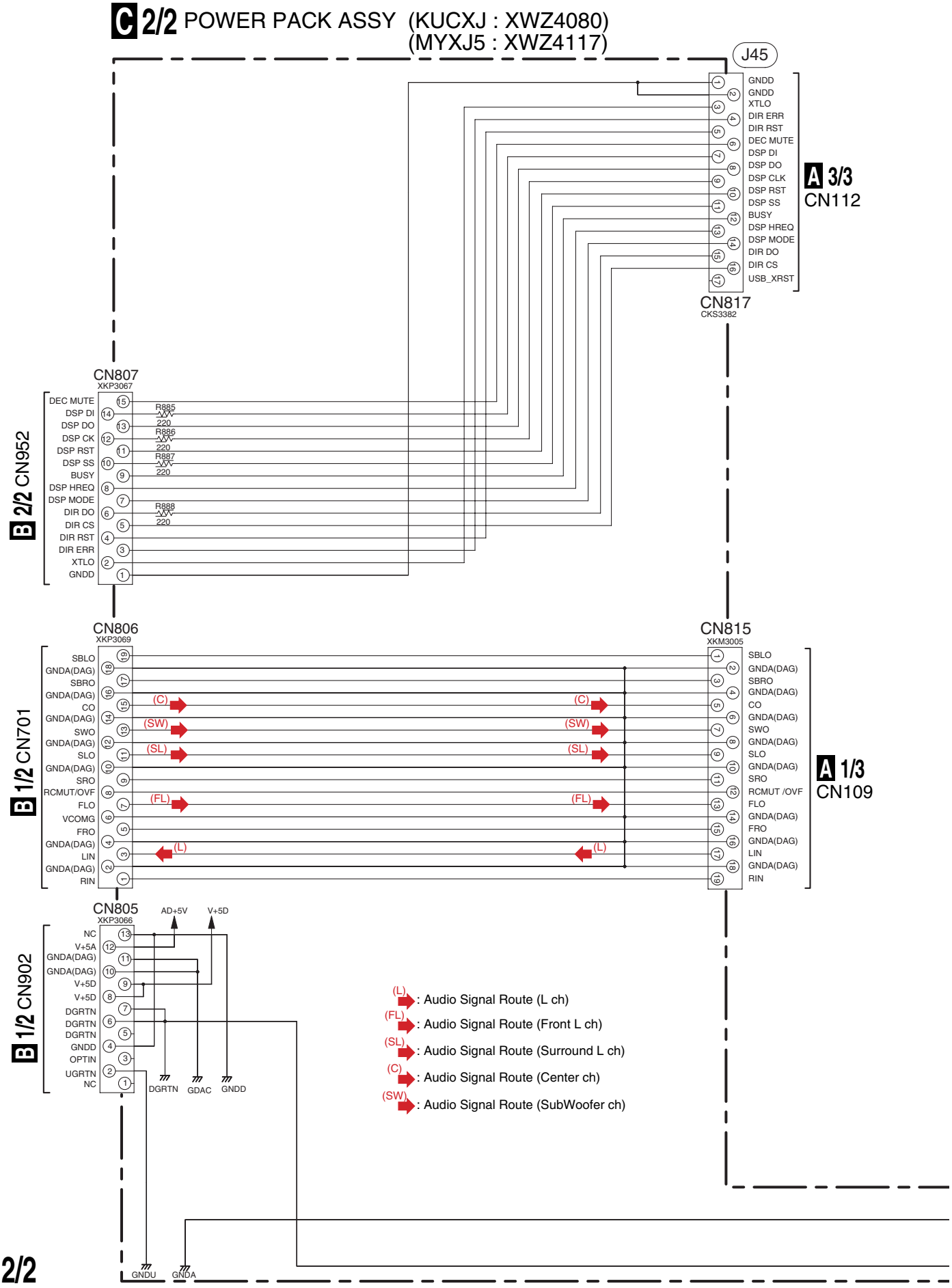

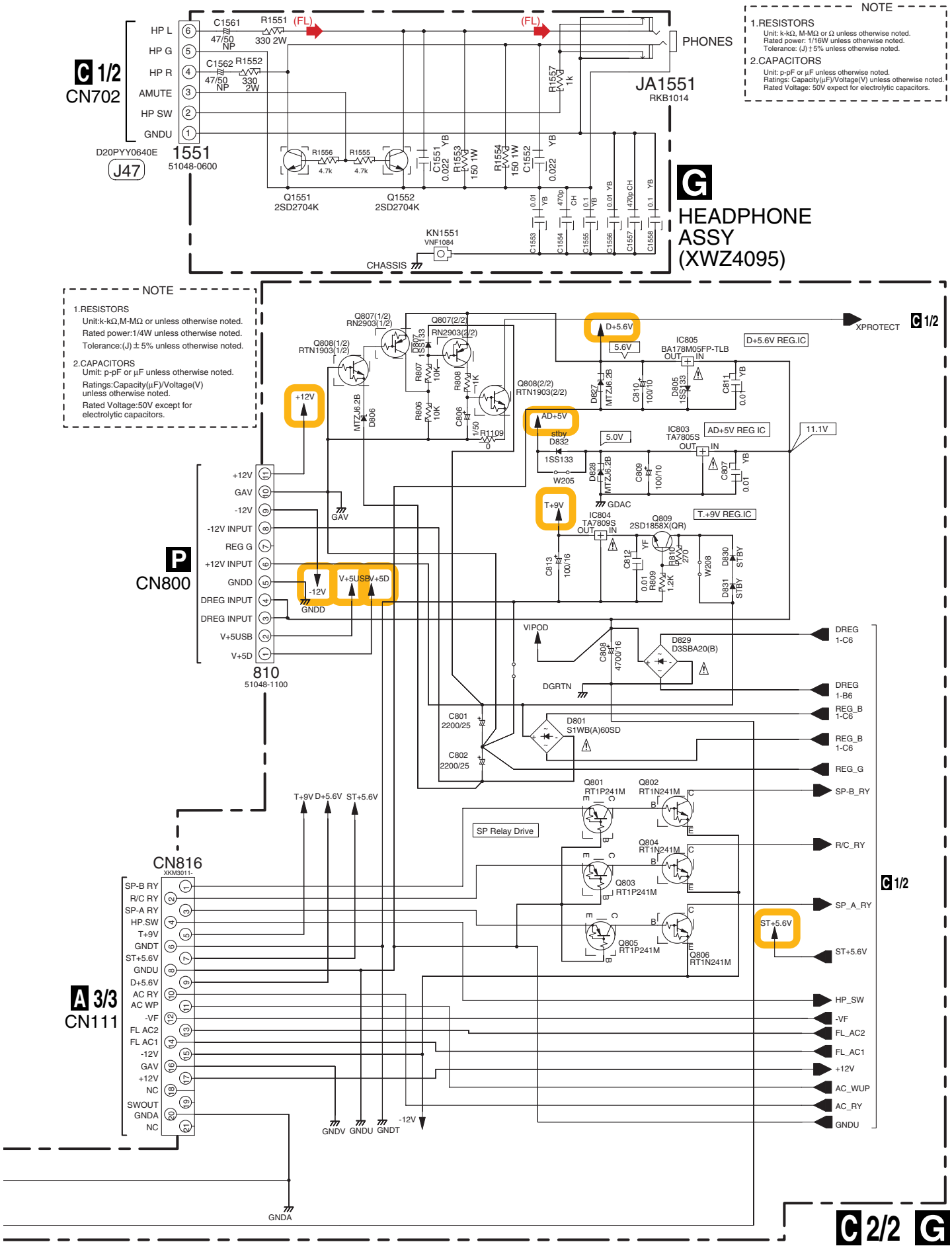
NOTE
1.RESISTORS
Unit: k-kΩ, M-MΩ or Ω unless otherwise noted.
Rated power: 1/16W unless otherwise noted.
Tolerance: (J) ±5% unless otherwise noted.
2.CAPACITORS
Unit: p-pF or µF unless otherwise noted.
Ratings: Capacity(µF)/Voltage(V) unless otherwise noted.
Rated Voltage: 50V expect for electrolytic capacitors.
C 1/2
CN702
HP L
HP G
HP R
AMUTE
HP SW
GNDU
D20PYY0640E
J47
1551
51048-0600
PHONES
JA1551
RKB1014
Q1551
2SD2704K
Q1552
2SD2704K
KN1551
VNF1084
CHASSIS
G
HEADPHONE
ASSY
(XWZ4095)
NOTE
1.RESISTORS
Unit:k-kΩ,M-MΩ or unless otherwise noted.
Rated power:1/4W unless otherwise noted.
Tolerance:(J) ±5% unless otherwise noted.
2.CAPACITORS
Umit: p-pF or µF unless otherwise noted.
Ratings:Capacity(µF)/Voltage(V) unless otherwise noted.
Rated Voltage:50V except for electrolytic capacitors.
XPROTECT
C 1/2
D+5.6V REG.IC
IC805
BA178M05FP-TLB
AD+5V REG IC
IC803
TA7805S
T.+9V REG.IC
IC804
TA7809S
Q809
2SD1858X(QR)
GDAC
GAV
GNDD
P
CN800
810
51048-1100
VIPOD
DGRTN
D829
D3SBA20(B)
D801
S1WB(A)60SD
C801
2200/25
C802
2200/25
SP Relay Drive
Q801
RT1P241M
Q802
RT1N241M
Q803
RT1P241M
Q804
RT1N241M
Q805
RT1P241M
Q806
RT1N241M
CN816
A 3/3
CN111
GNDV
GNDU
GNDT
GNDA
DREG 1-C6
DREG 1-B6
REG_B 1-C6
REG_G
SP-B_RY
R/C_RY
SP_A_RY
ST+5.6V
HP_SW
-VF
FL_AC2
FL_AC1
+12V
AC_WUP
AC_RY
GNDU
C 2/2
G

# 3.10 FRONT DISPLAY, R. ENCODER and POWER KEY ASSYS

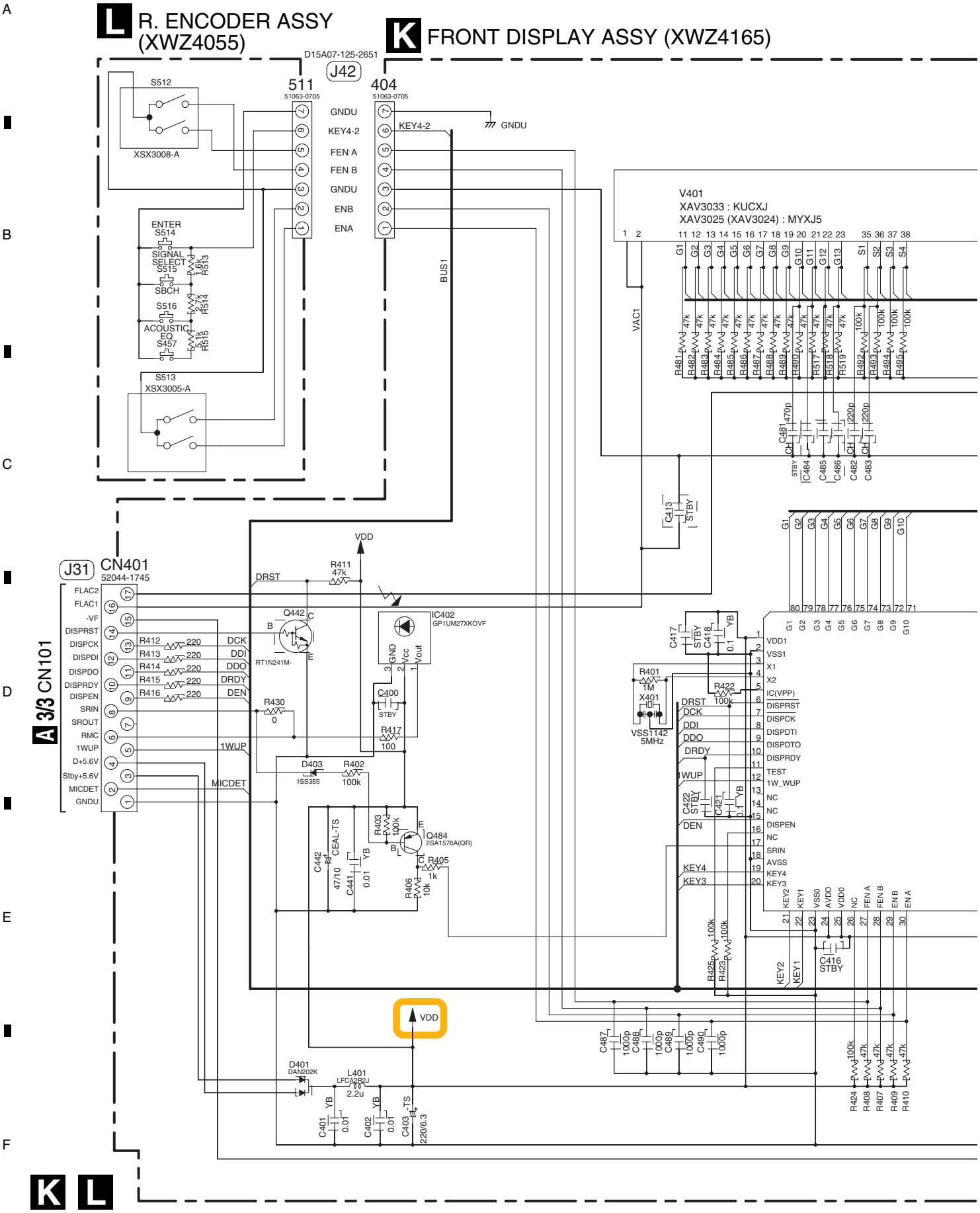

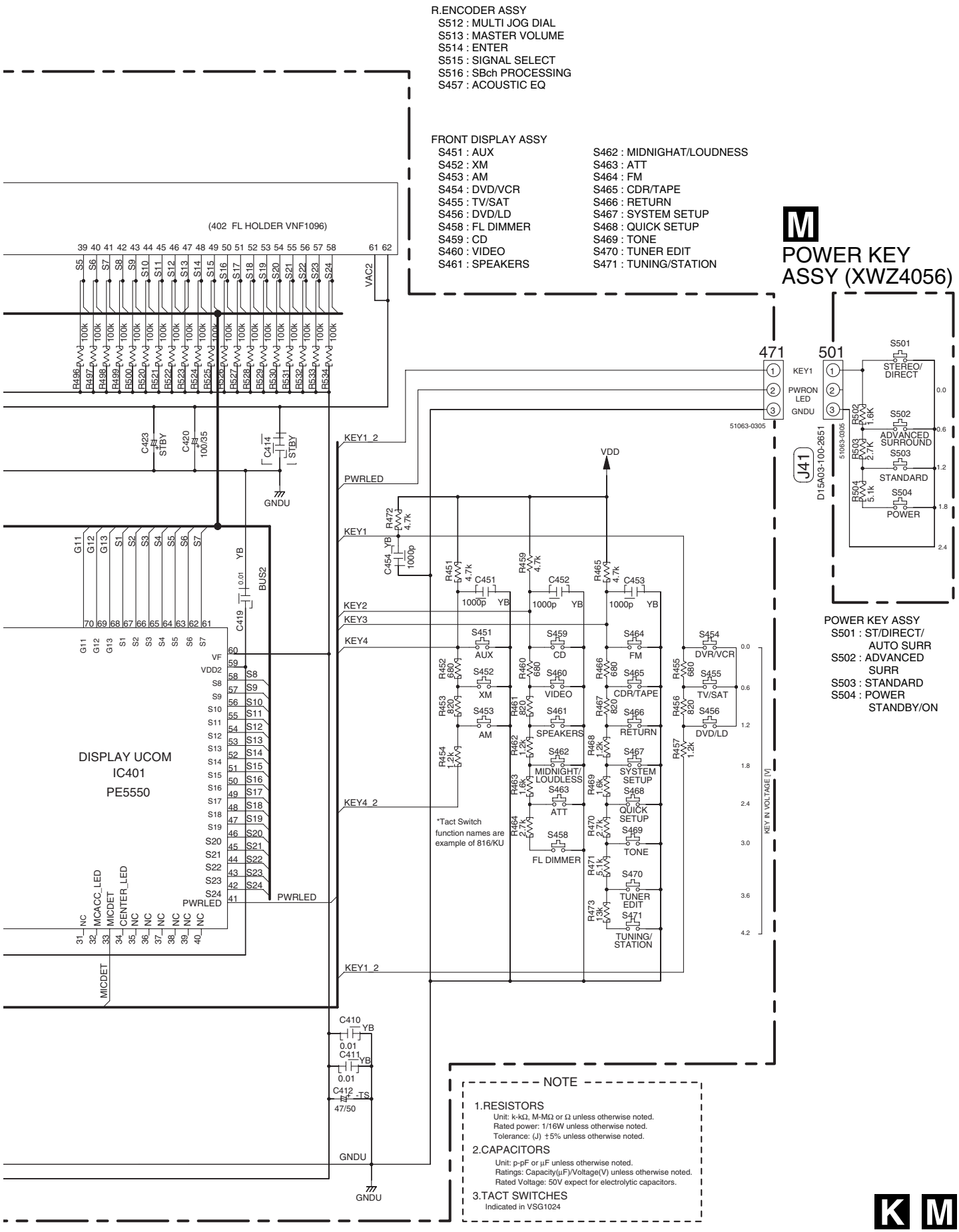
R.ENCODER ASSY
S512 : MULTI JOG DIAL
S513 : MASTER VOLUME
S514 : ENTER
S515 : SIGNAL SELECT
S516 : SBch PROCESSING
S457 : ACOUSTIC EQ
FRONT DISPLAY ASSY
S451 : AUX
S452 : XM
S453 : AM
S454 : DVD/VCR
S455 : TV/SAT
S456 : DVD/LD
S458 : FL DIMMER
S459 : CD
S460 : VIDEO
S461 : SPEAKERS
S462 : MIDNIGHAT/LOUDNESS
S463 : ATT
S464 : FM
S465 : CDR/TAPE
S466 : RETURN
S467 : SYSTEM SETUP
S468 : QUICK SETUP
S469 : TONE
S470 : TUNER EDIT
S471 : TUNING/STATION
M
POWER KEY ASSY (XWZ4056)
(402 FL HOLDER VNF1096)
DISPLAY UCOM
IC401
PE5550
471
501
J41
D15A03-100-2651
51063-0305
KEY1
PWRON LED
GNDU
S501
STEREO/ DIRECT
S502
ADVANCED SURROUND
S503
STANDARD
S504
POWER
POWER KEY ASSY
S501 : ST/DIRECT/ AUTO SURR
S502 : ADVANCED SURR
S503 : STANDARD
S504 : POWER STANDBY/ON
*Tact Switch function names are example of 816/KU
KEY IN VOLTAGE [V]
NOTE
1.RESISTORS
Unit: k-kΩ, M-MΩ or Ω unless otherwise noted.
Rated power: 1/16W unless otherwise noted.
Tolerance: (J) ±5% unless otherwise noted.
2.CAPACITORS
Unit: p-pF or μF unless otherwise noted.
Ratings: Capacity(μF)/Voltage(V) unless otherwise noted.
Rated Voltage: 50V expect for electrolytic capacitors.
3.TACT SWITCHES
Indicated in VSG1024
K M

# 3.11 TRANS 4, REGULATOR and DIGITAL IN ASSYS

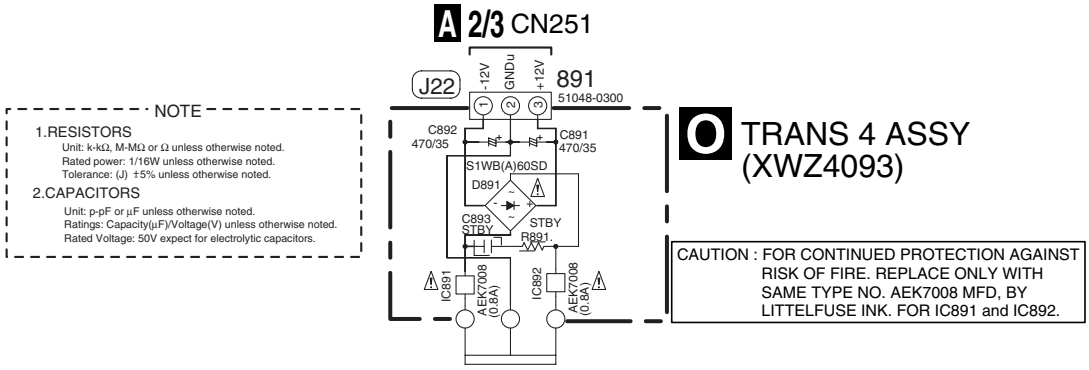


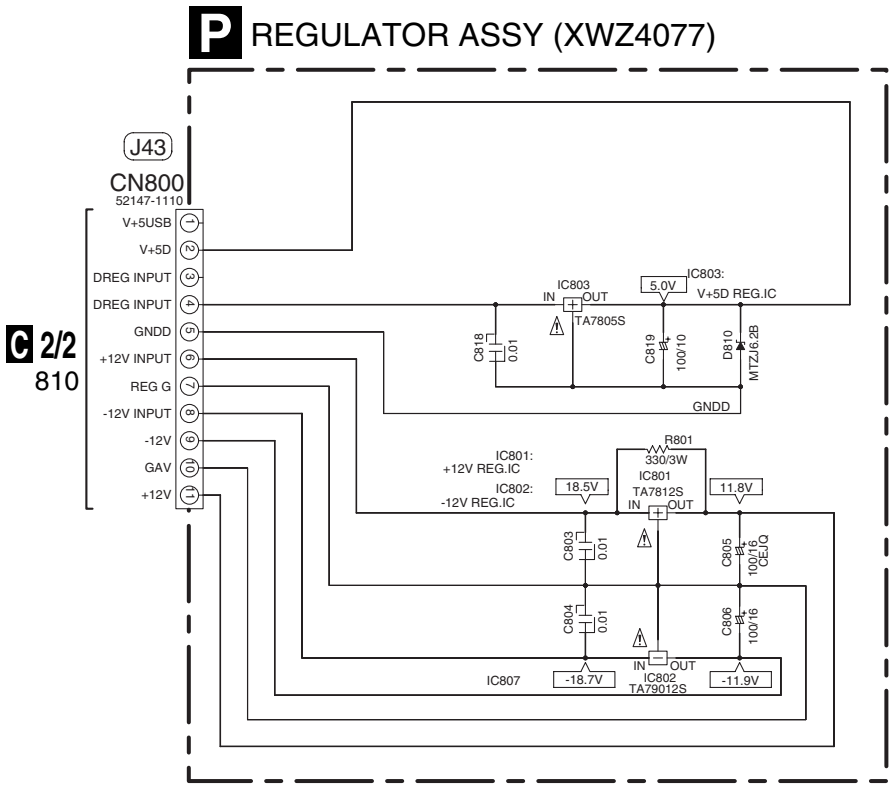


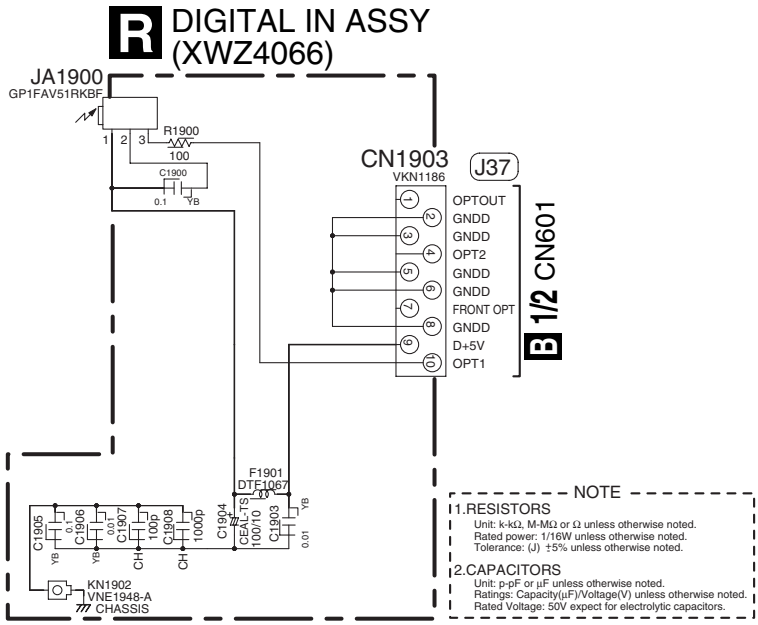


O P R

# 3.12 FRONT INPUT, PRIMARY and TRANS 1 ASSYS

(L) : Audio Signal Route (L ch)

## T FRONT INPUT ASSY (XWZ4124)

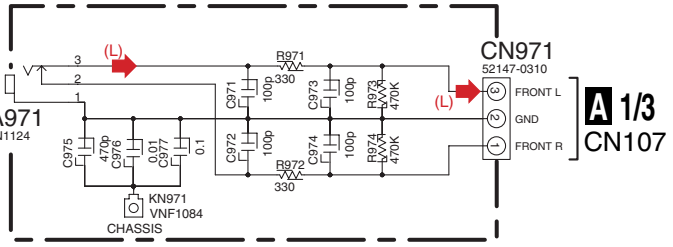


• NOTE FOR FUSE REPLACEMENT

**CAUTION -** FOR CONTINUED PROTECTION AGAINST RISK OF FIRE. REPLACE WITH SAME TYPE AND RATINGS ONLY.

## U PRIMARY ASSY (KUCXJ : XWZ4128) (MYXJ5 : XWZ4073)

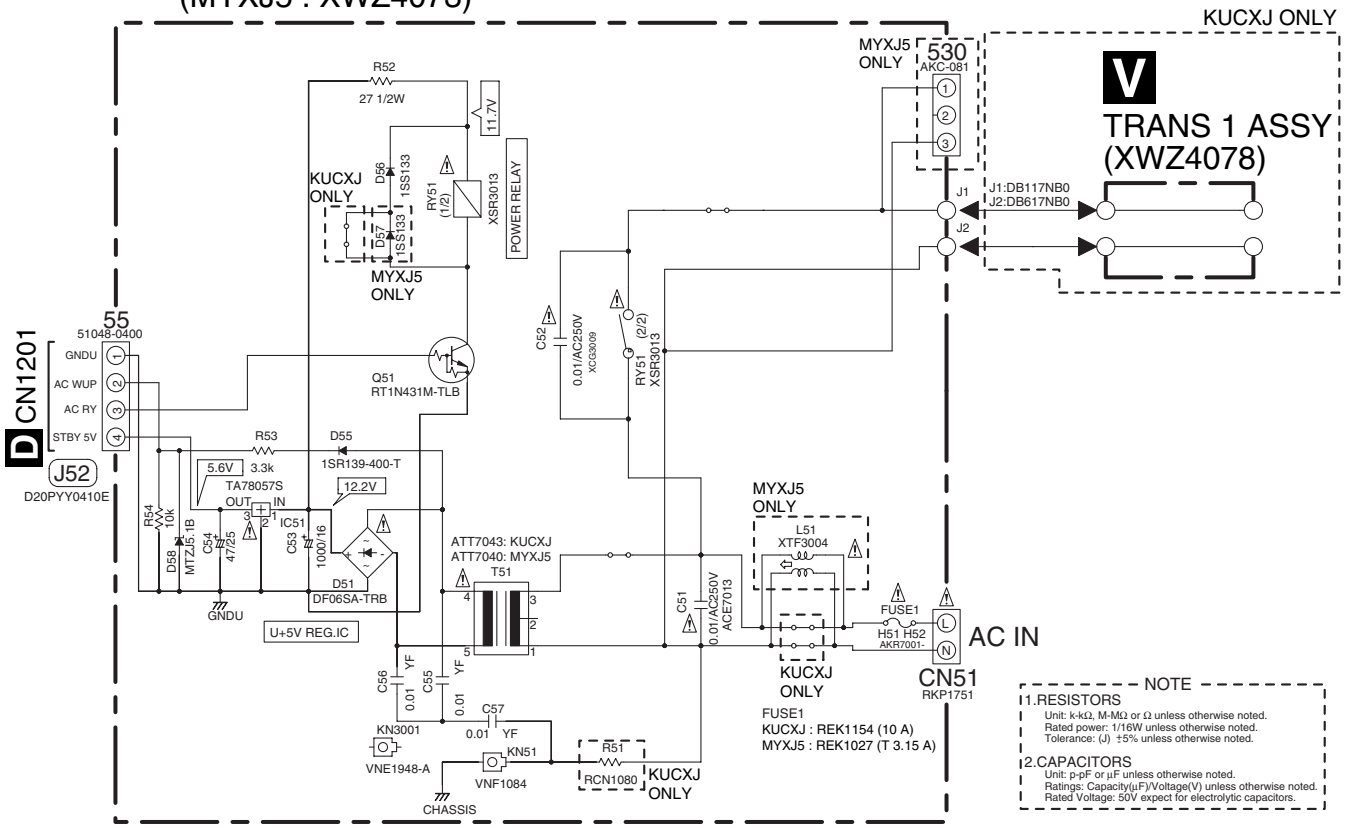


T U V

# 4. PCB CONNECTION DIAGRAM

## NOTE FOR PCB DIAGRAMS :

1. Part numbers in PCB diagrams match those in the schematic diagrams.
2. A comparison between the main parts of PCB and schematic diagrams is shown below.

| Symbol In PCB Diagrams | Symbol In Schematic Diagrams | Part Name |
|---|---|---|
| B C E | B C E B C E | Transistor |
| B C E | B C E B C E | Transistor with resistor |
| D G S | D G S D G S | Field effect transistor |
| | | Resistor array |
| | | 3-terminal regulator |

3. The parts mounted on this PCB include all necessary parts for several destinations.
   For further information for respective destinations, be sure to check with the schematic diagram.
4. View point of PCB diagrams.

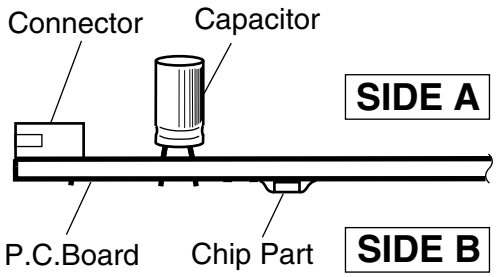

## 4.1 REGULATOR and DIGITAL IN ASSYS

**SIDE A**

**P** REGULATOR ASSY

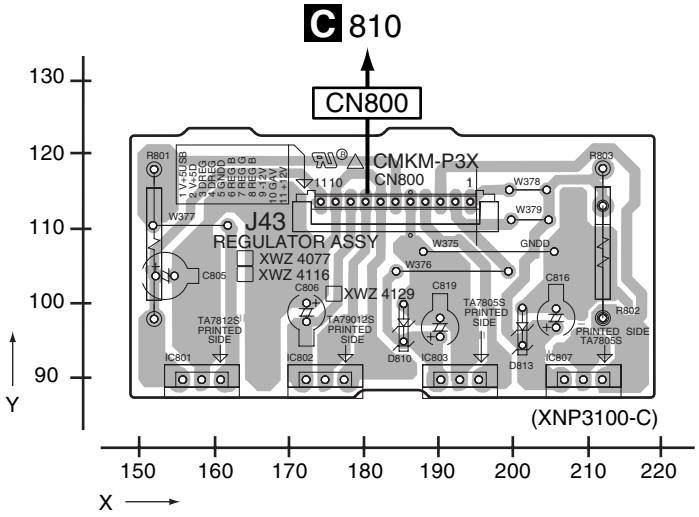


**SIDE A**

**R** DIGITAL IN ASSY

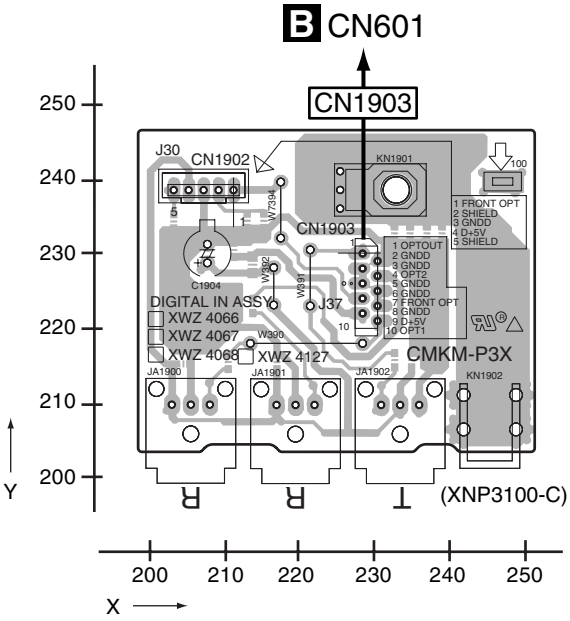


**SIDE B**

**P** REGULATOR ASSY

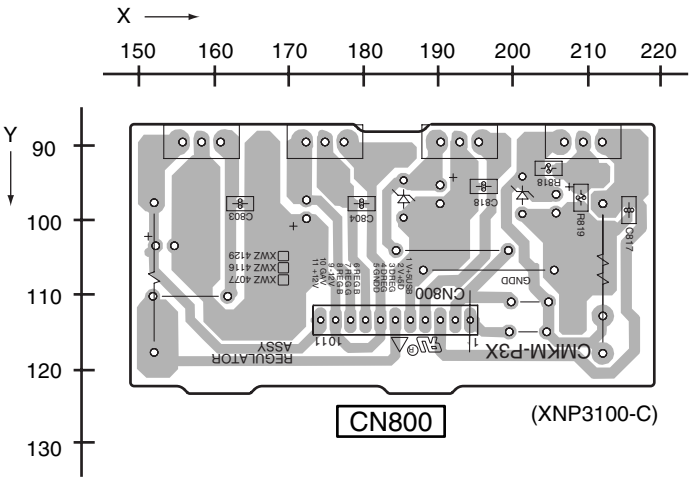


**SIDE B**

**R** DIGITAL IN ASSY

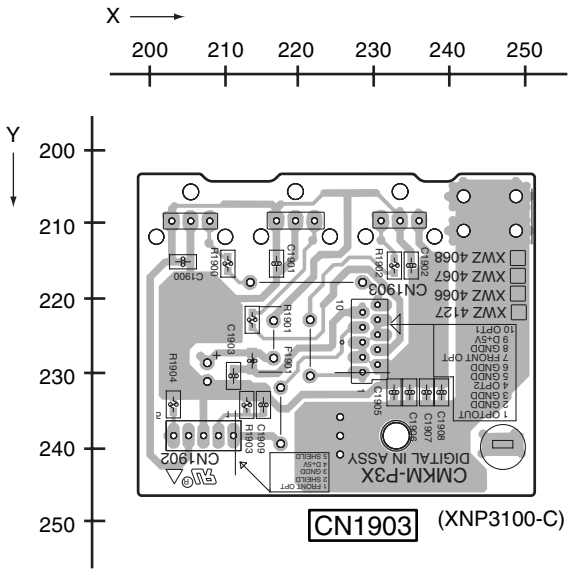


**P R** **P R**

## 4.2 MAIN and FRONT INPUT ASSYS

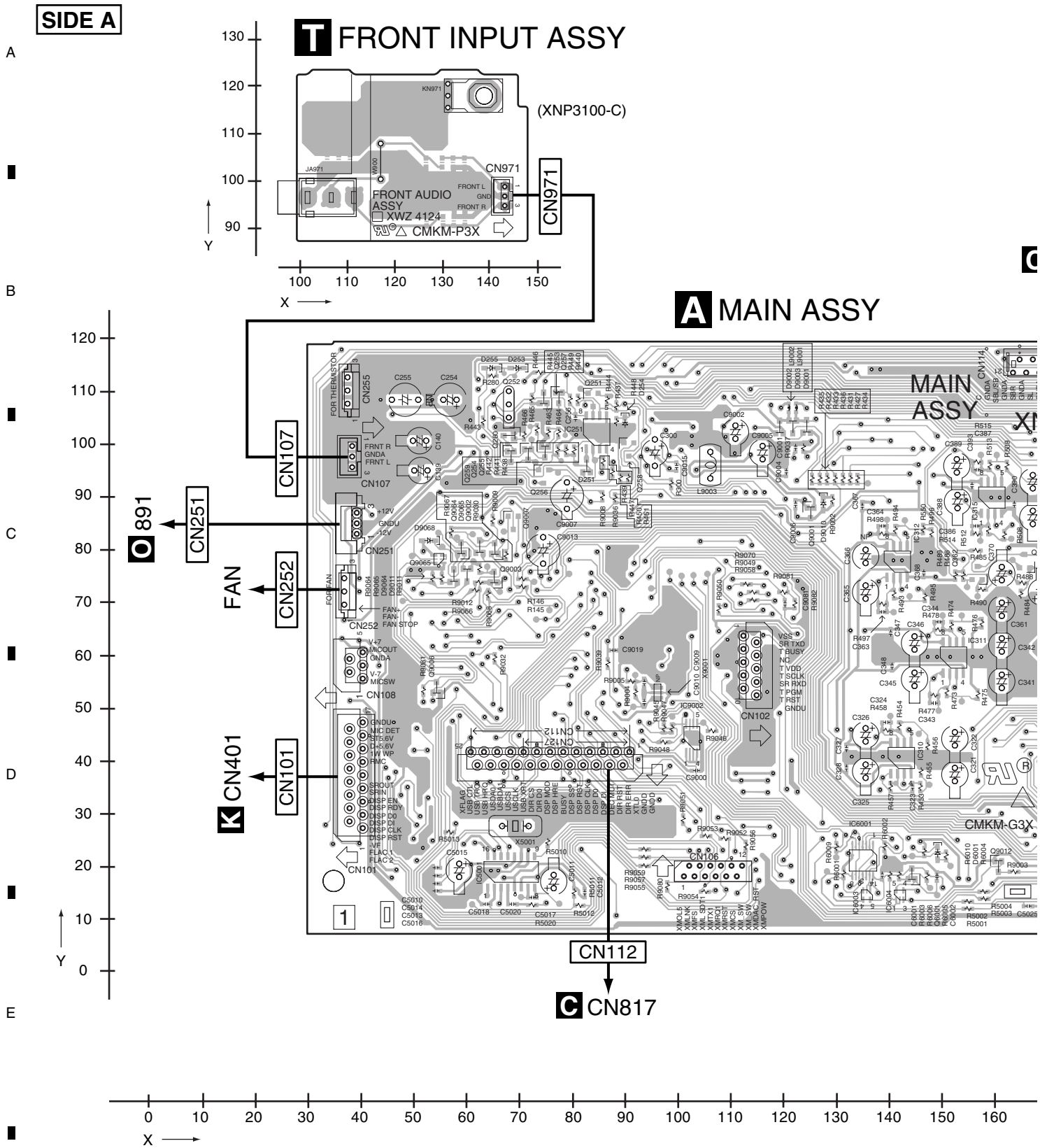

SIDE A

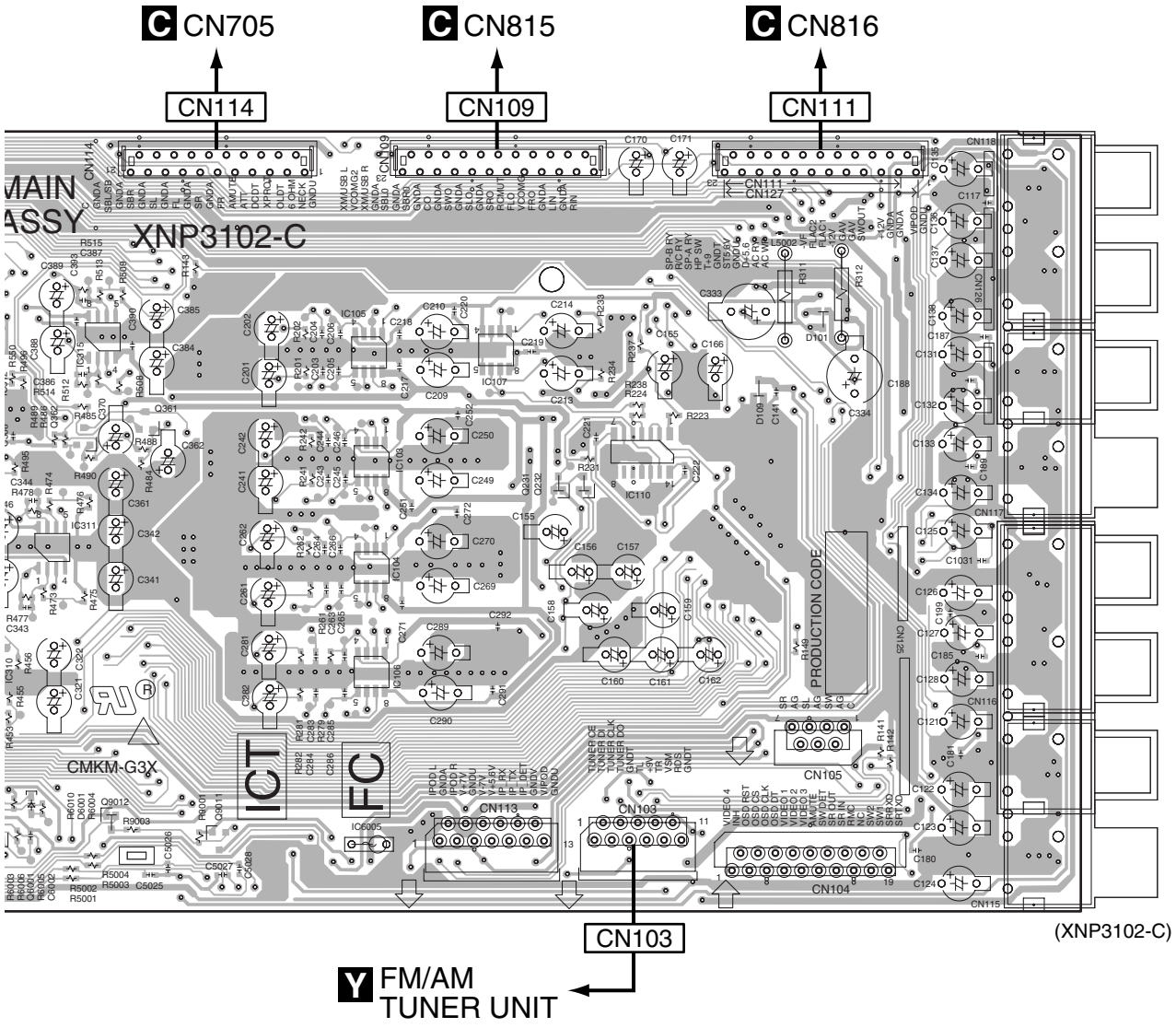


150 160 170 180 190 200 210 220 230 240 250 260 270 280 290 300 310 320

A

SIDE B

# A MAIN ASSY

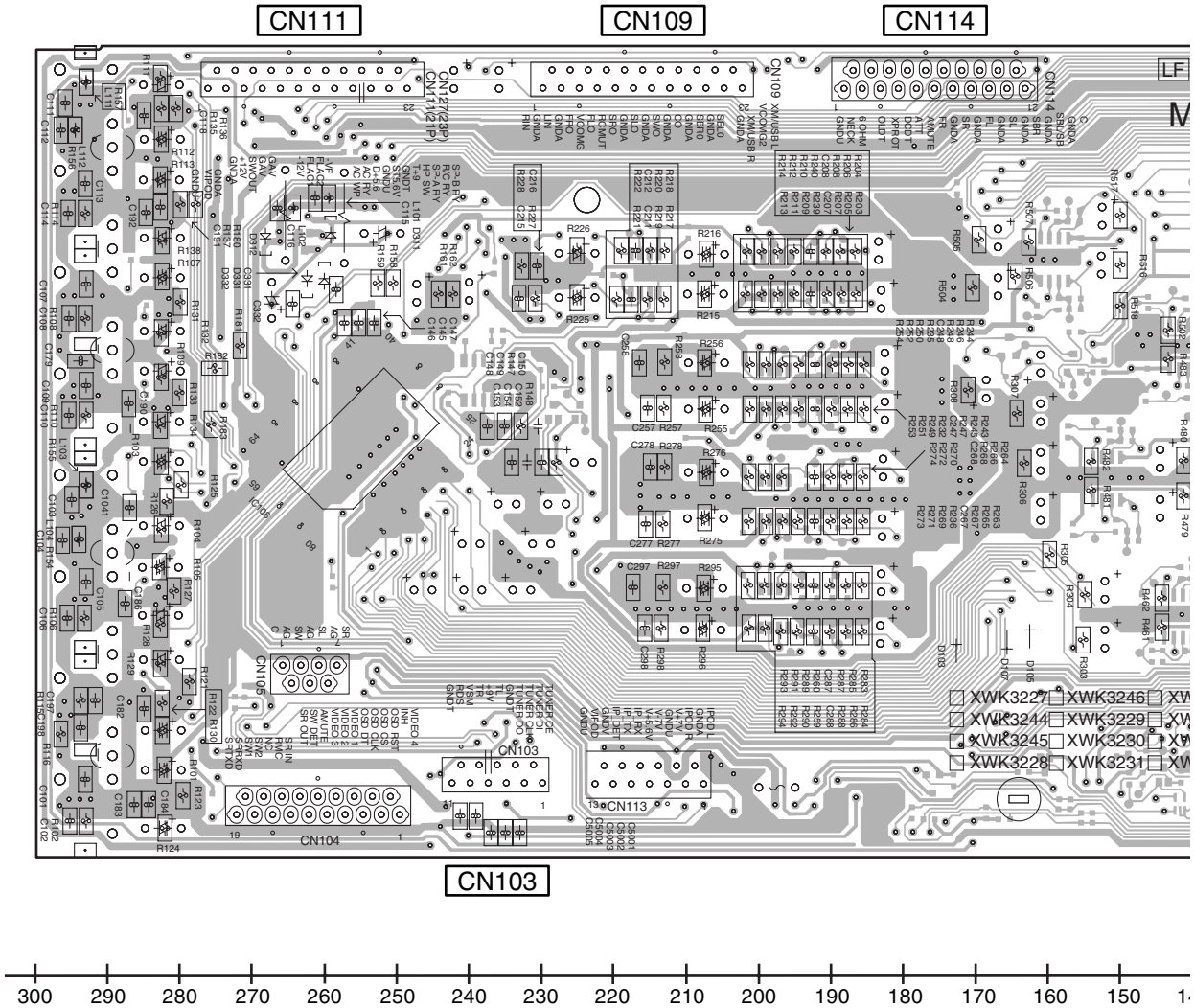

SIDE B

# T FRONT INPUT ASSY

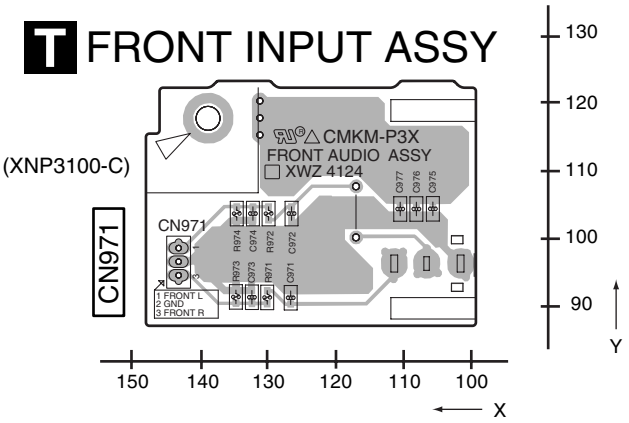


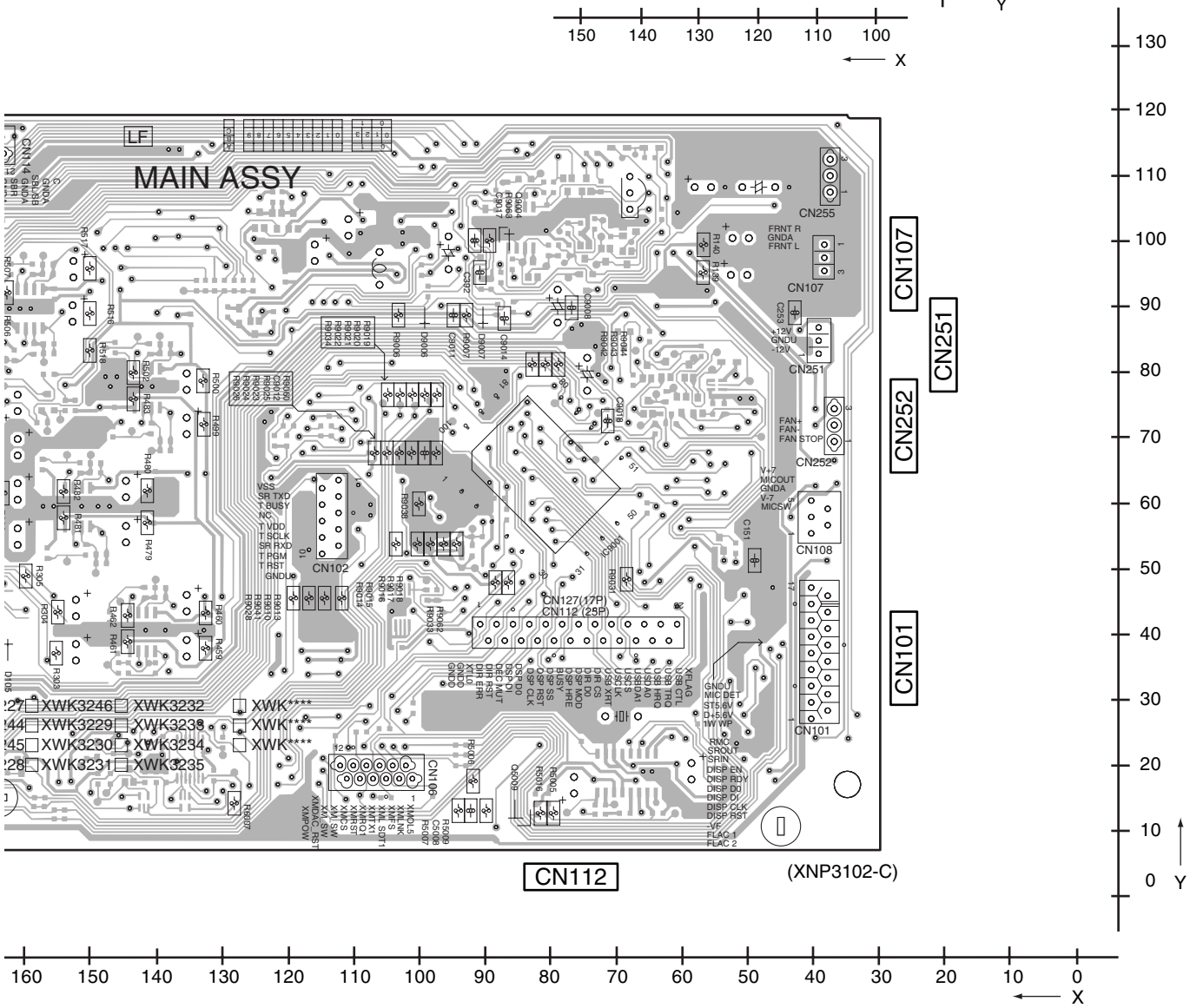

## 4.3 DSP ASSY

**SIDE A**

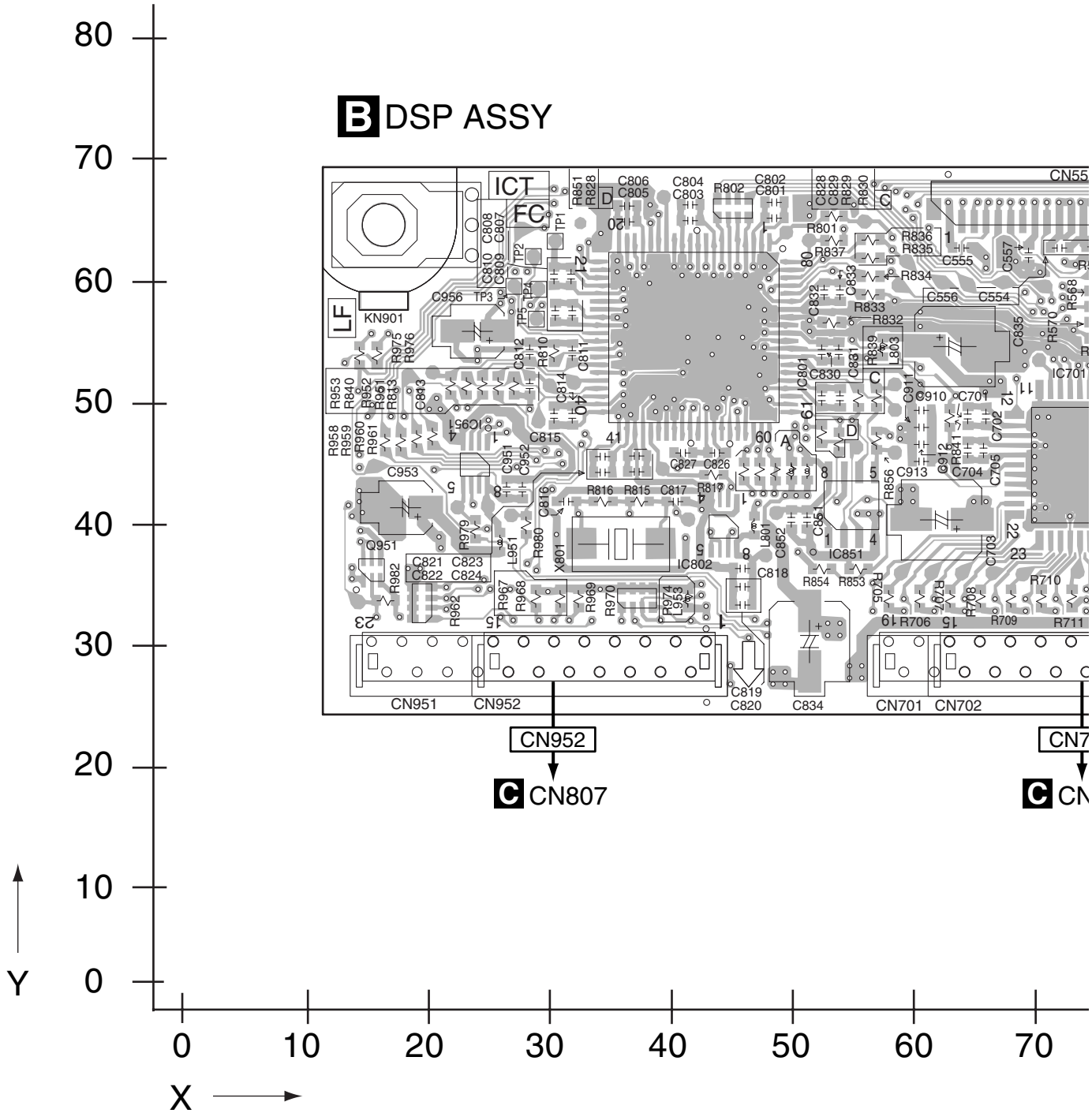

SIDE A

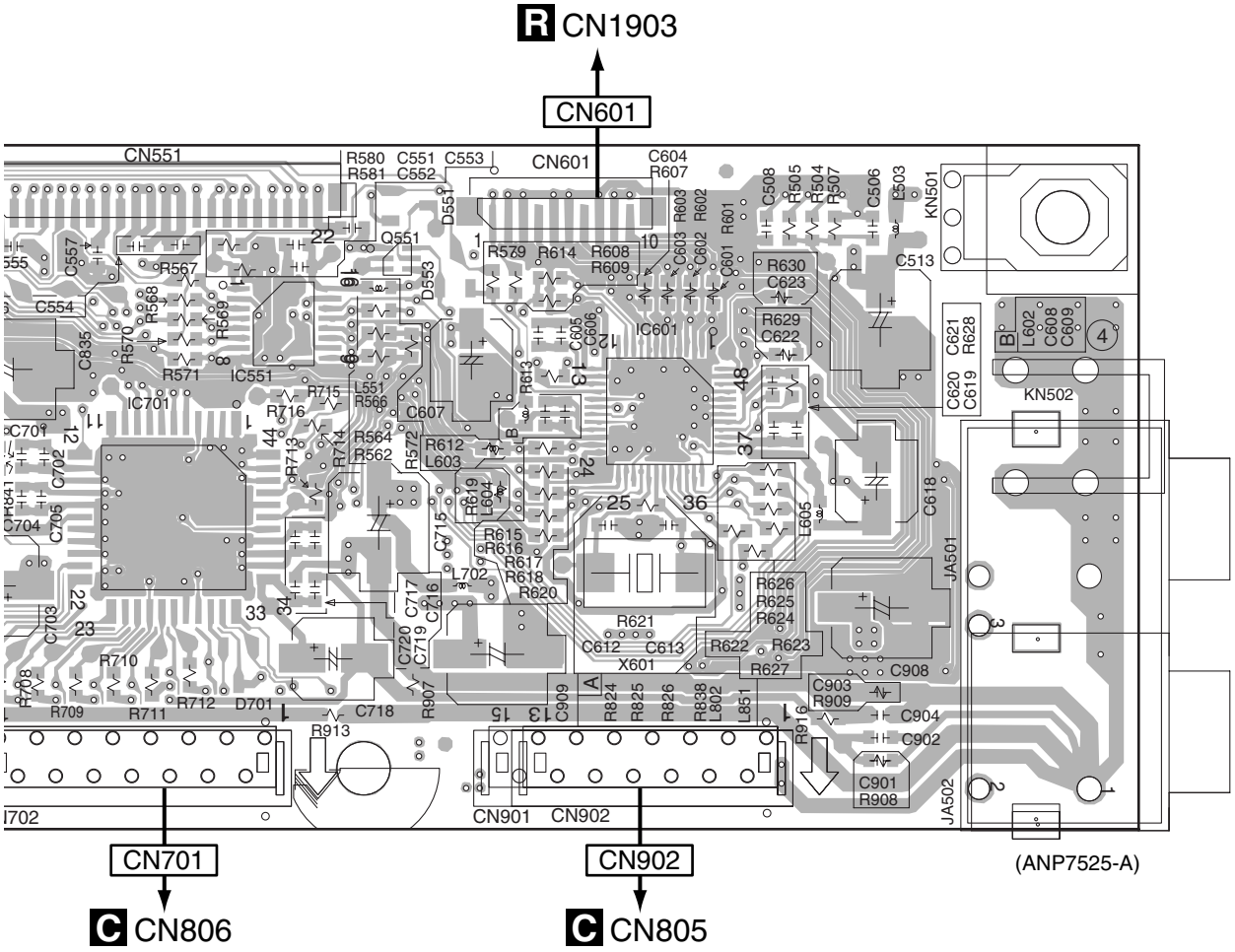


70 80 90 100 110 120 130 140

B

SIDE B

# B DSP ASSY

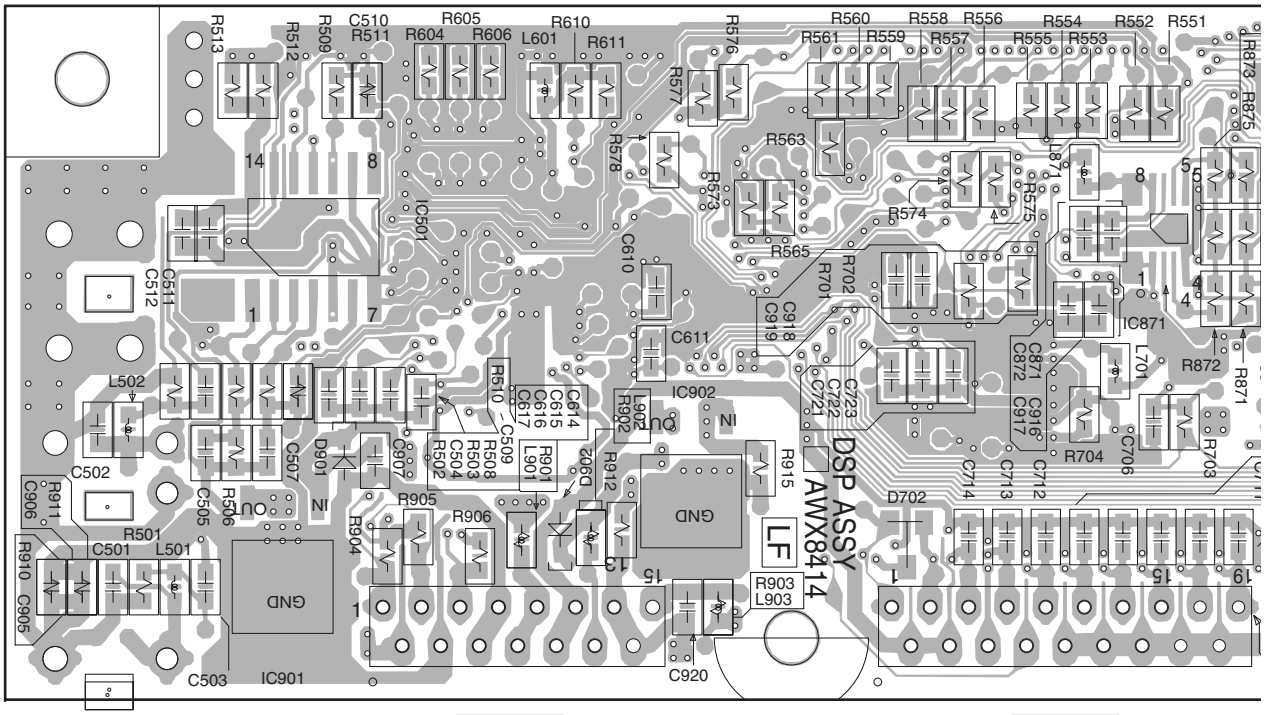


140 130 120 110 100 90 80 70 60

B

**SIDE B**

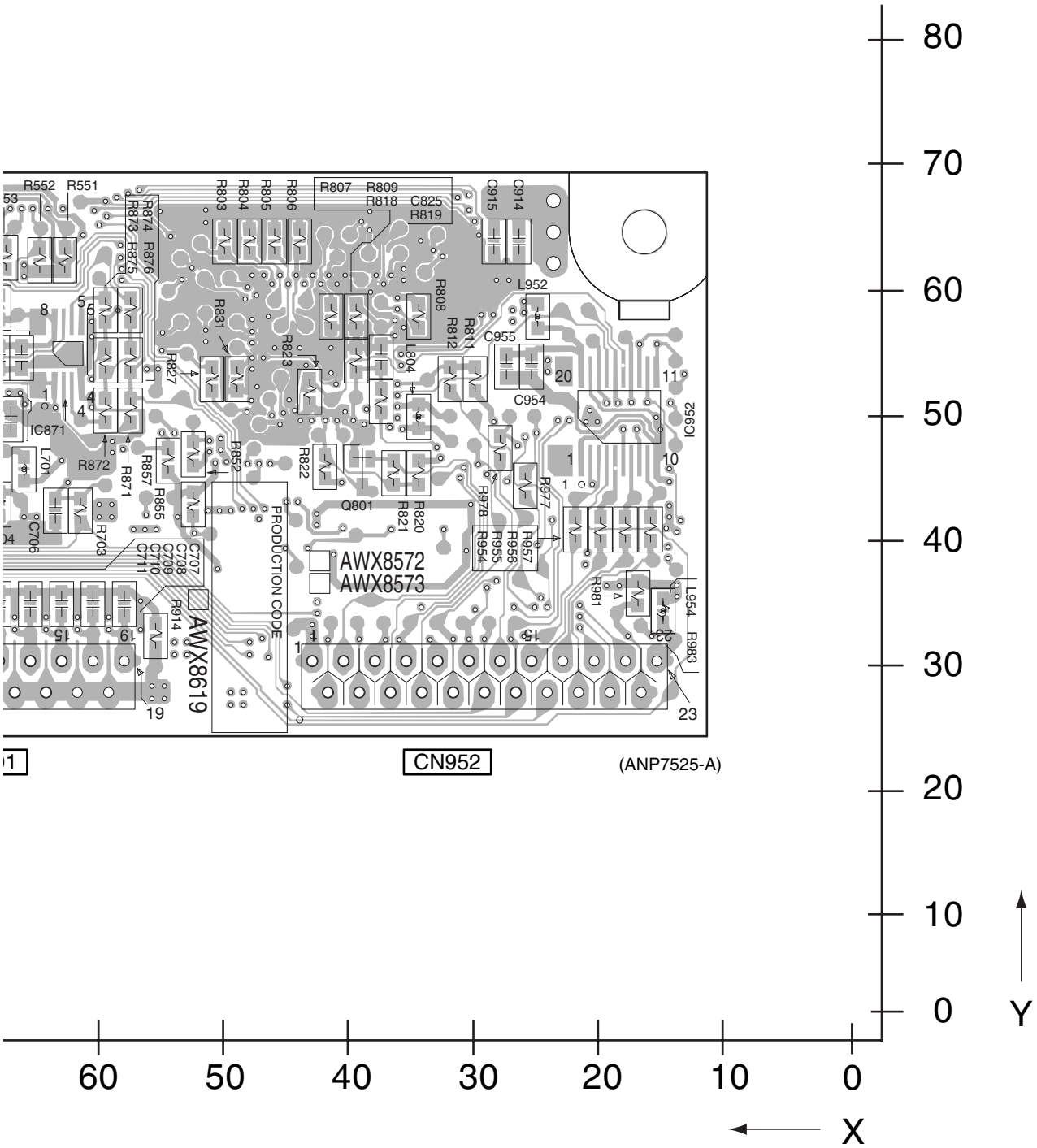
80
70
60
50
40
30
20
10
0
Y
60
50
40
30
20
10
0
X
R552
R551
R803
R804
R805
R806
R807
R809
R818
C825
R819
C915
C914
R874
R873
R876
R875
R808
L952
R831
R823
R827
R812
R811
C955
L804
C954
IC871
IC952
R872
R871
R857
R855
R852
R822
Q801
R821
R820
R978
R977
R954
R955
R956
R957
L701
C706
R703
C707
C708
C709
C710
C711
PRODUCTION CODE
AWX8572
AWX8573
AWX8619
R914
R981
L954
R983
CN952
(ANP7525-A)

# 4.4 POWER PACK ASSY

**SIDE A**

## C POWER PACK ASSY

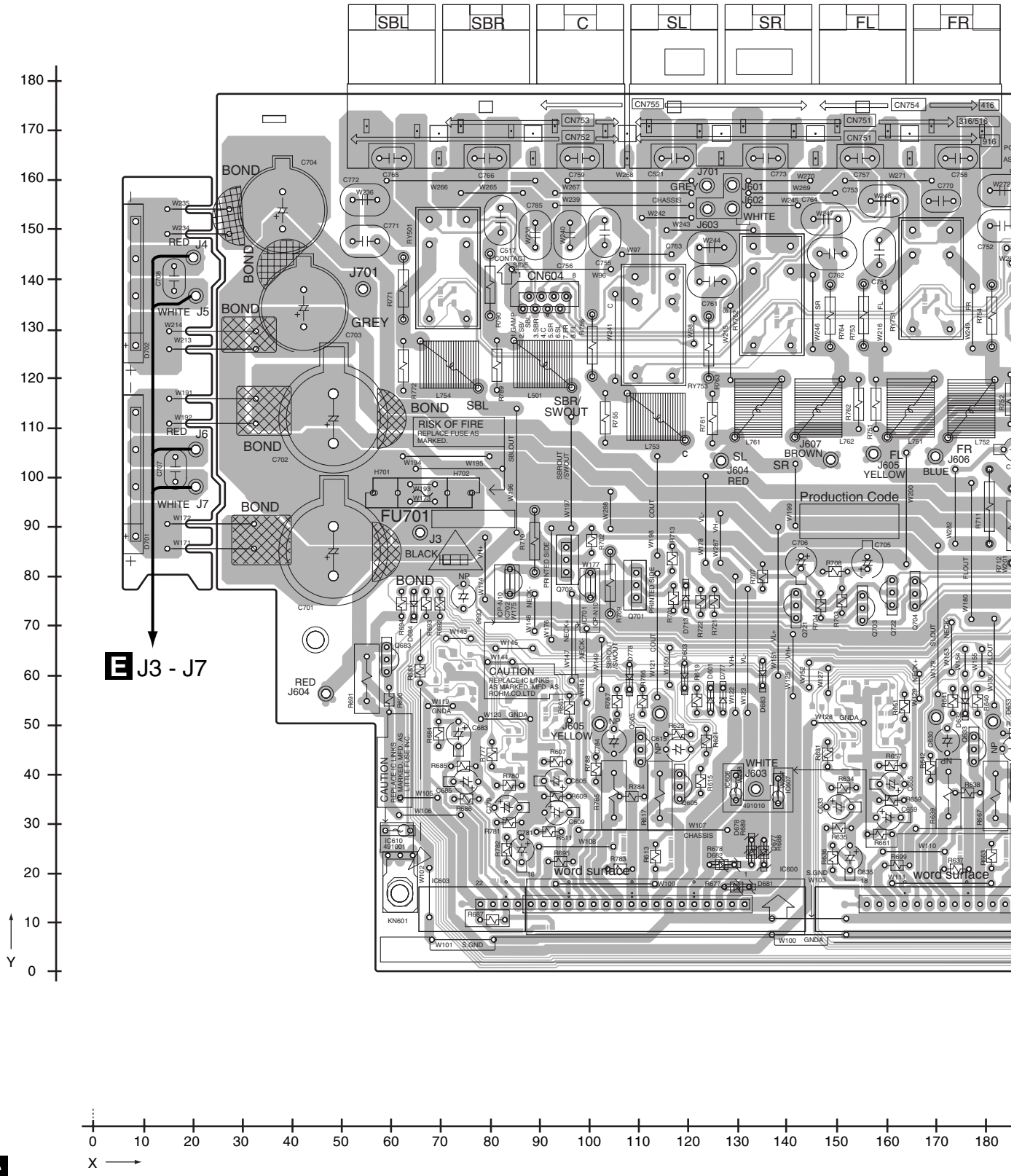

SIDE A

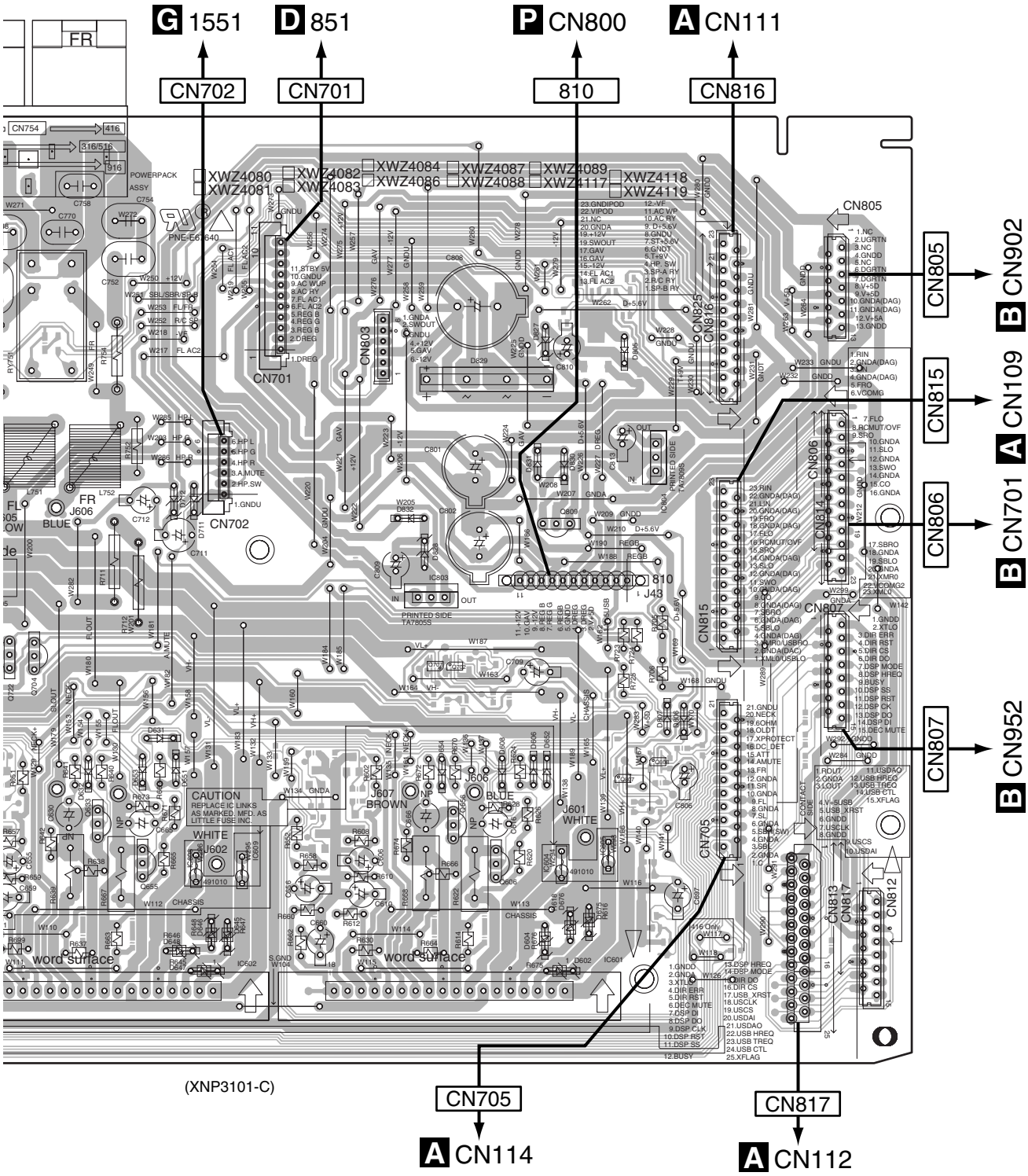
G 1551
D 851
P CN800
A CN111
CN702
CN701
810
CN816
CN805
B CN902
CN815
A CN109
CN806
B CN701
CN807
B CN952
CN705
A CN114
CN817
A CN112
(XNP3101-C)
XWZ4080
XWZ4081
XWZ4082
XWZ4083
XWZ4084
XWZ4086
XWZ4087
XWZ4088
XWZ4089
XWZ4117
XWZ4118
XWZ4119
CAUTION
REPLACE IC LINKS AS MARKED. MFD. AS LITTLE FUSE INC.
word surface
CHASSIS
WHITE
BLUE
BROWN
J602
J606
J607
J601
J43
CN803
CN814
CN812
CN813
CN817
CN825
POWERPACK ASSY
PNE-E6640
PRINTED SIDE TA7805S
PRINTED SIDE TA7805S

SIDE B

# C POWER PACK ASSY

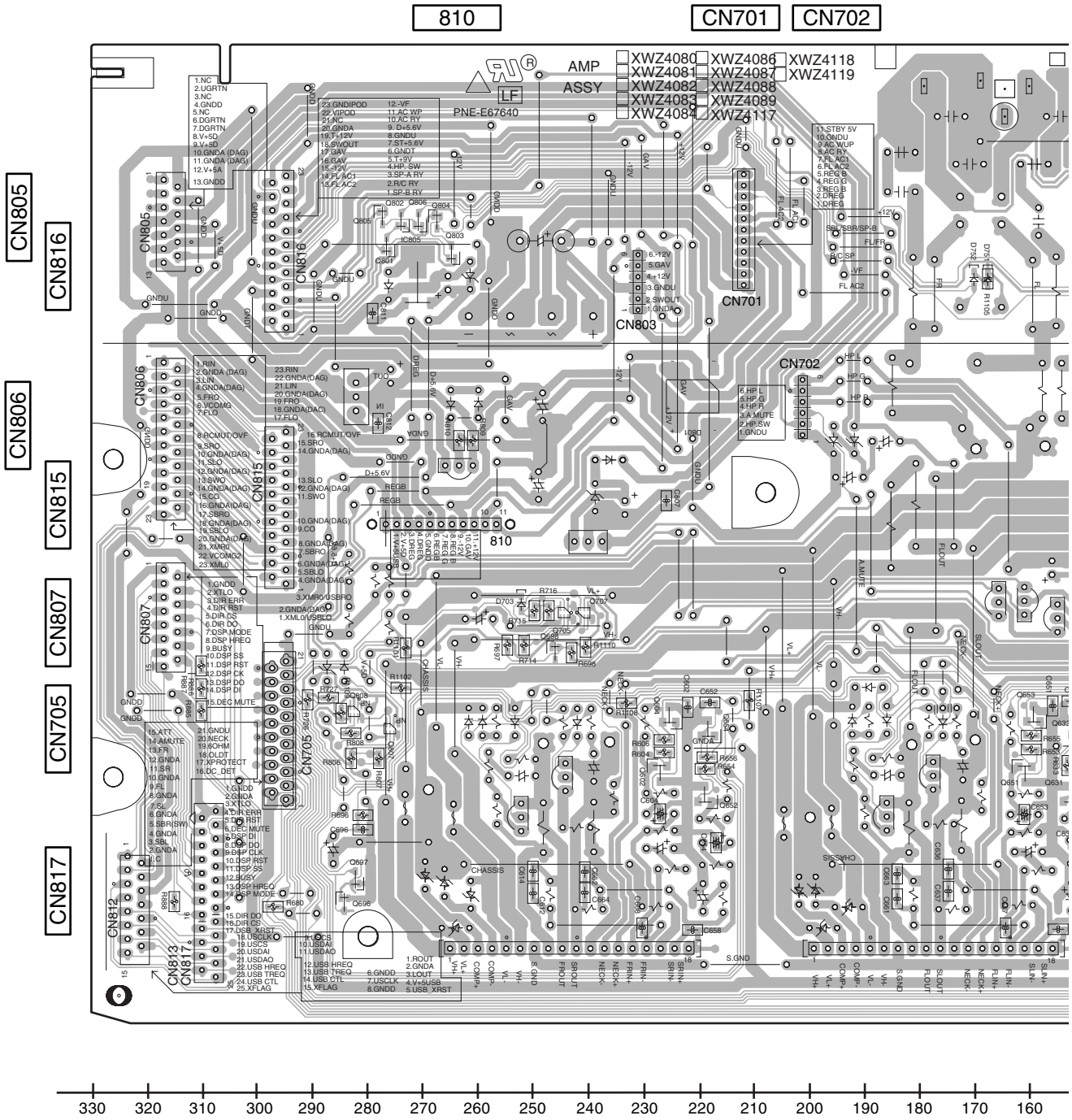


330 320 310 300 290 280 270 260 250 240 230 220 210 200 190 180 170 160

C

**SIDE B**

A

B

C

D

E

F

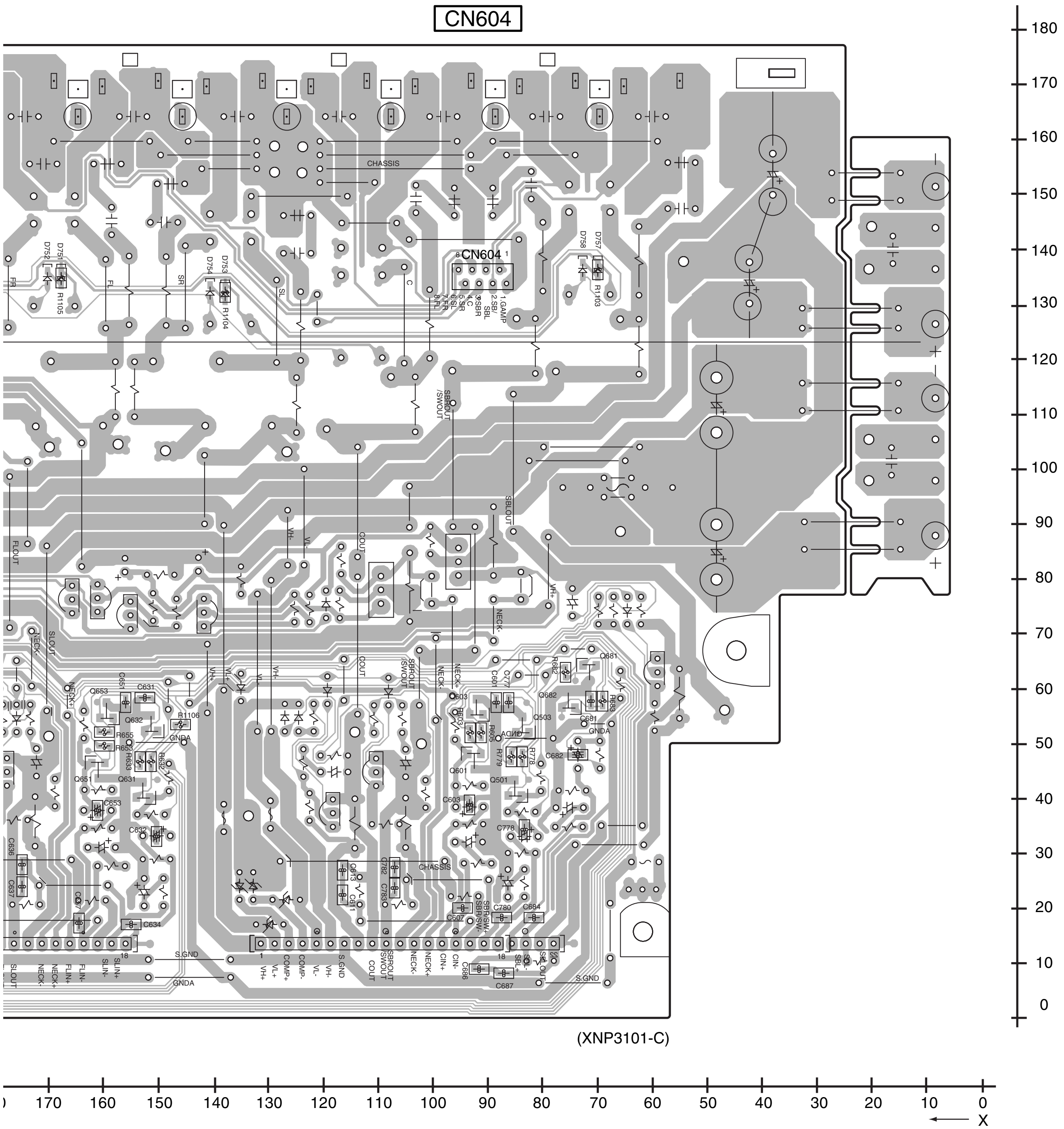

(XNP3101-C)

C

## 4.5 TRANS2, TRANS3, TRANS4 and TRANS1 ASSYS

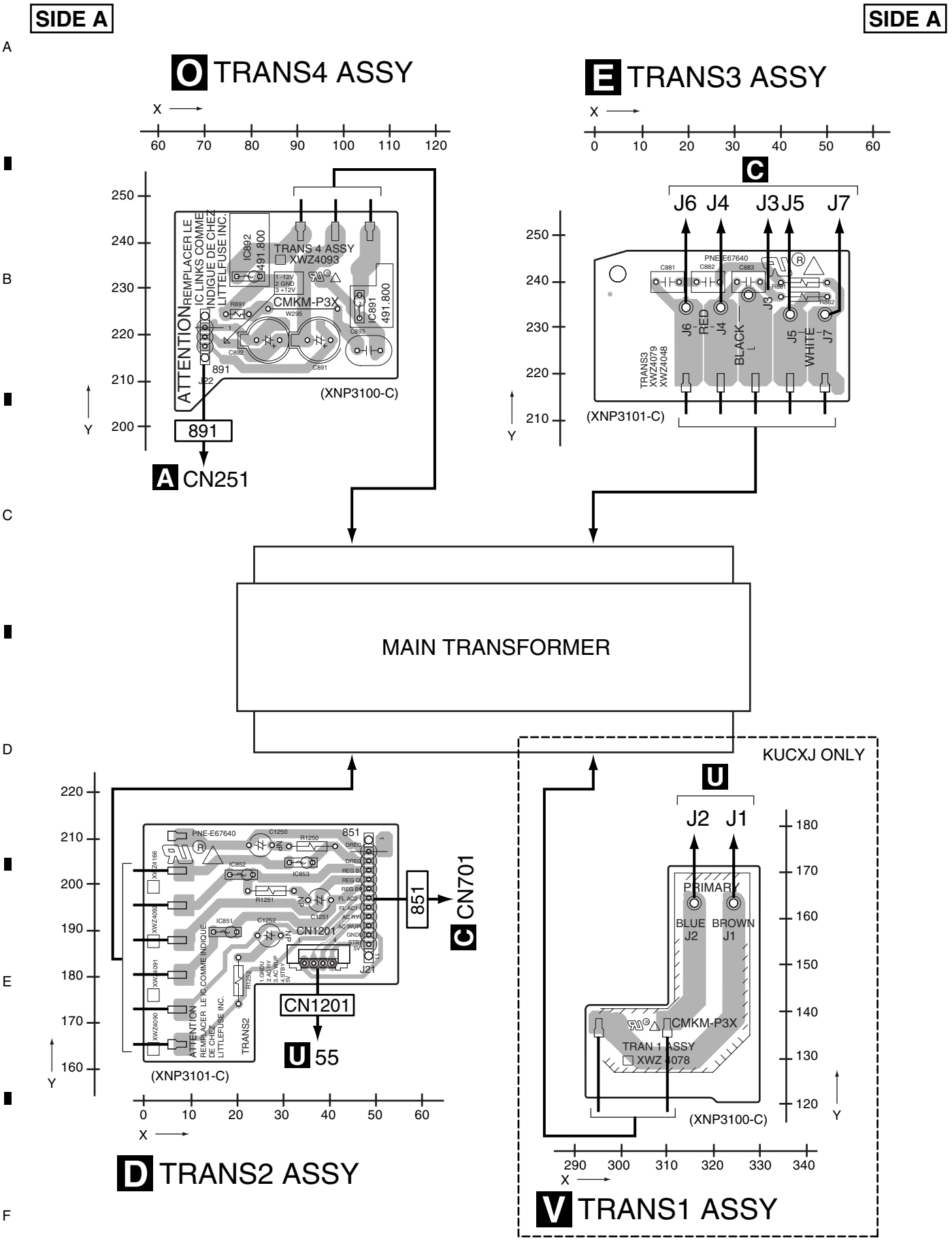

SIDE B

SIDE B

## E TRANS3 ASSY

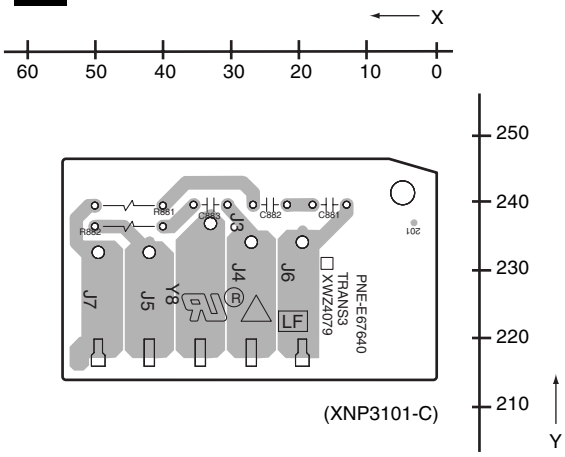


## O TRANS4 ASSY

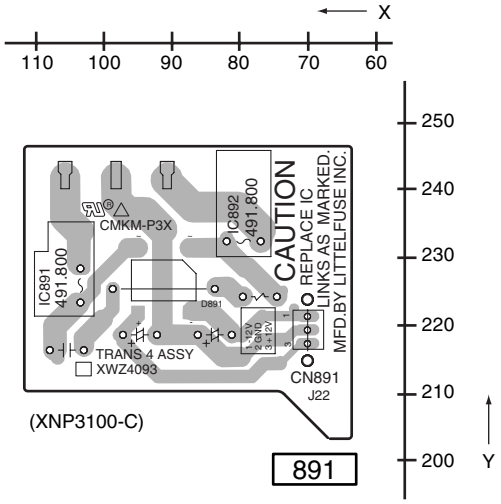


KUCXJ ONLY

## V TRANS1 ASSY

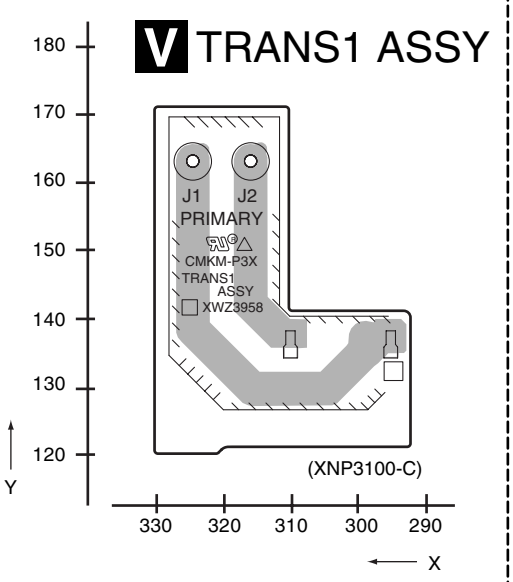


## D TRANS2 ASSY

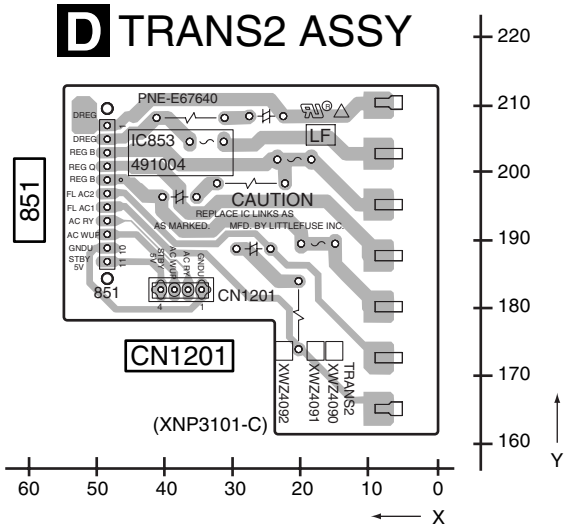


D E O V

D E O V

# 4.6 HEAD PHONE, FRONT DISPLY, R. ENCODER and POWER KEY ASSYS

**SIDE A**

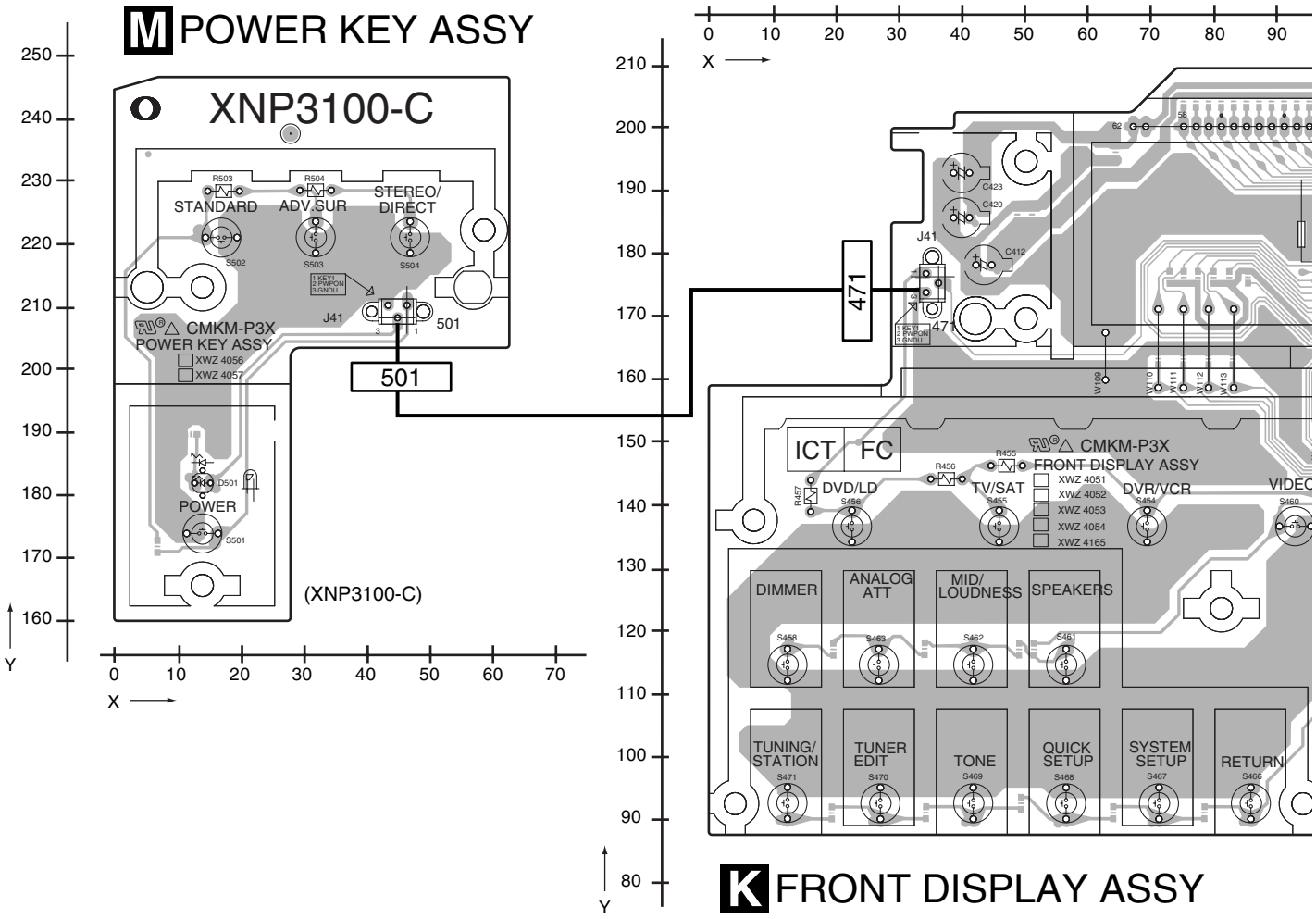


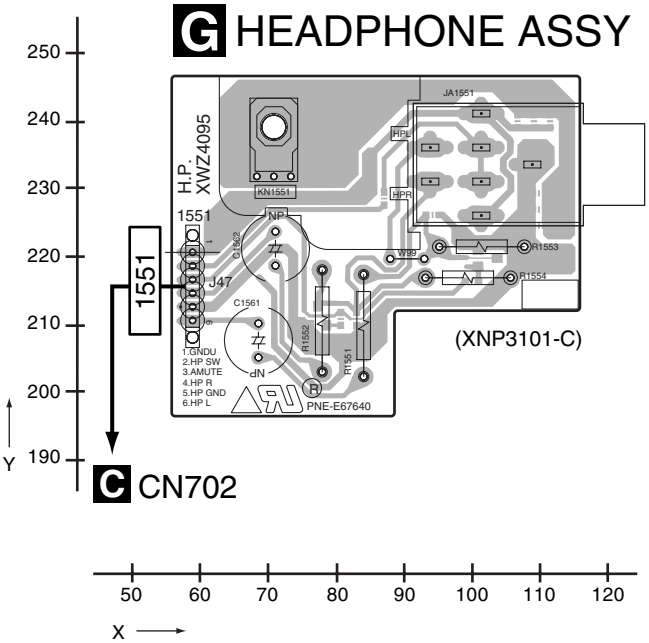


**G K M**

SIDE A

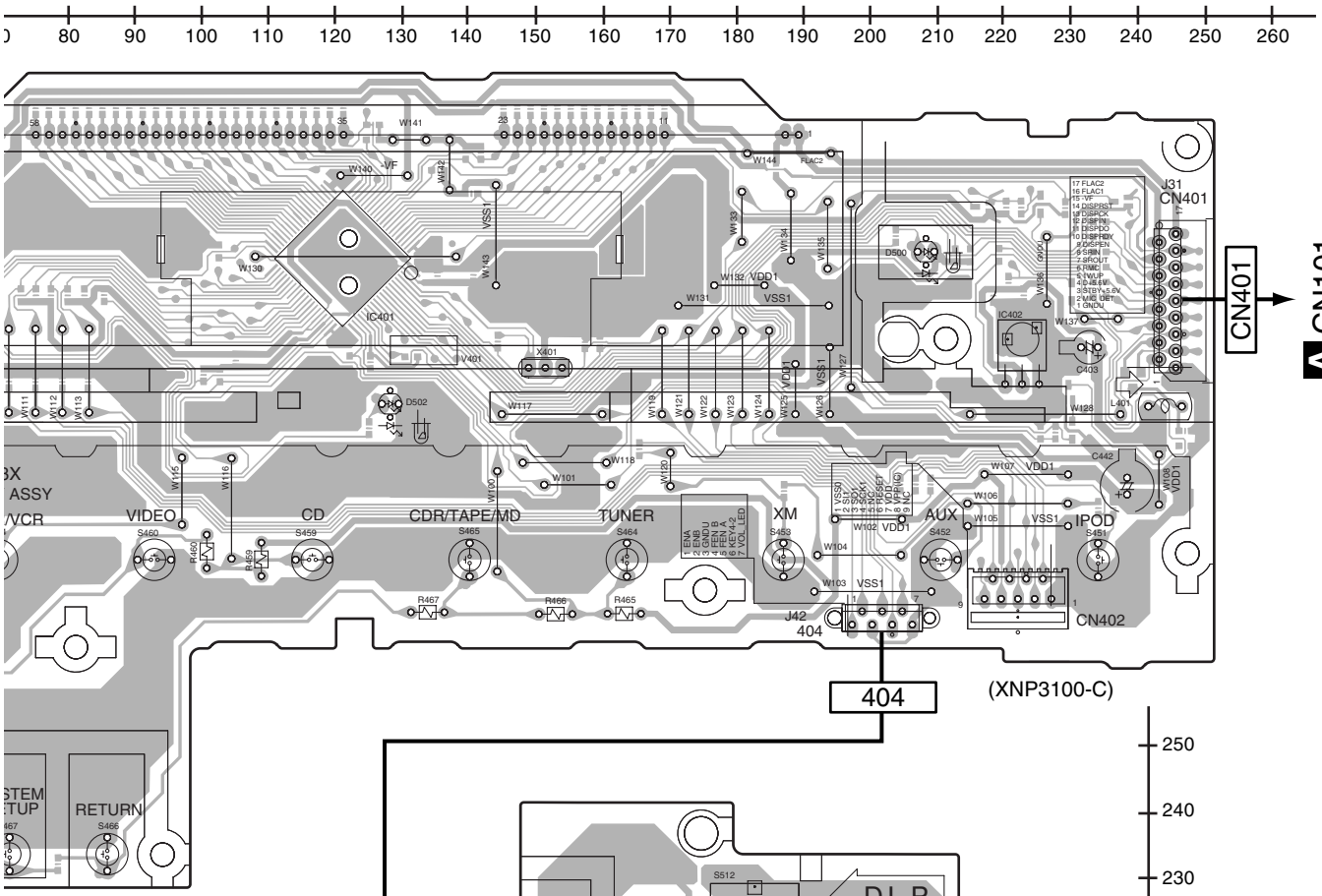


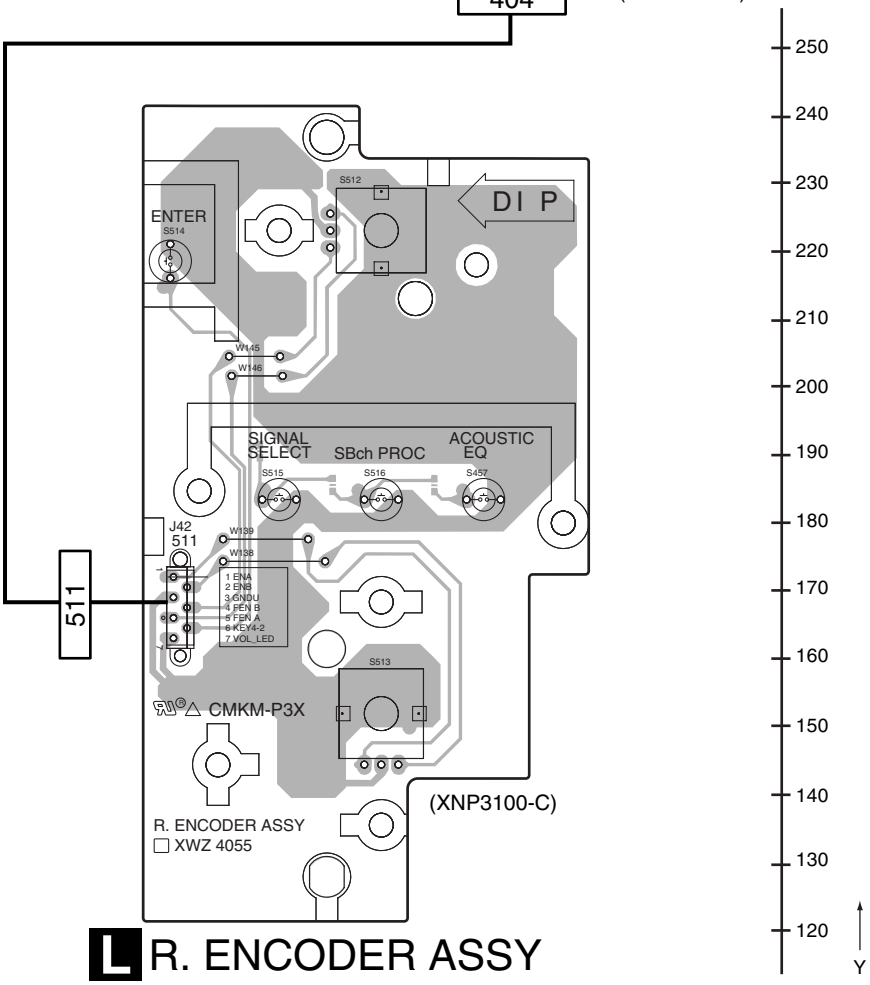


L R. ENCODER ASSY

K L

SIDE B

## K FRONT DISPLAY ASSY

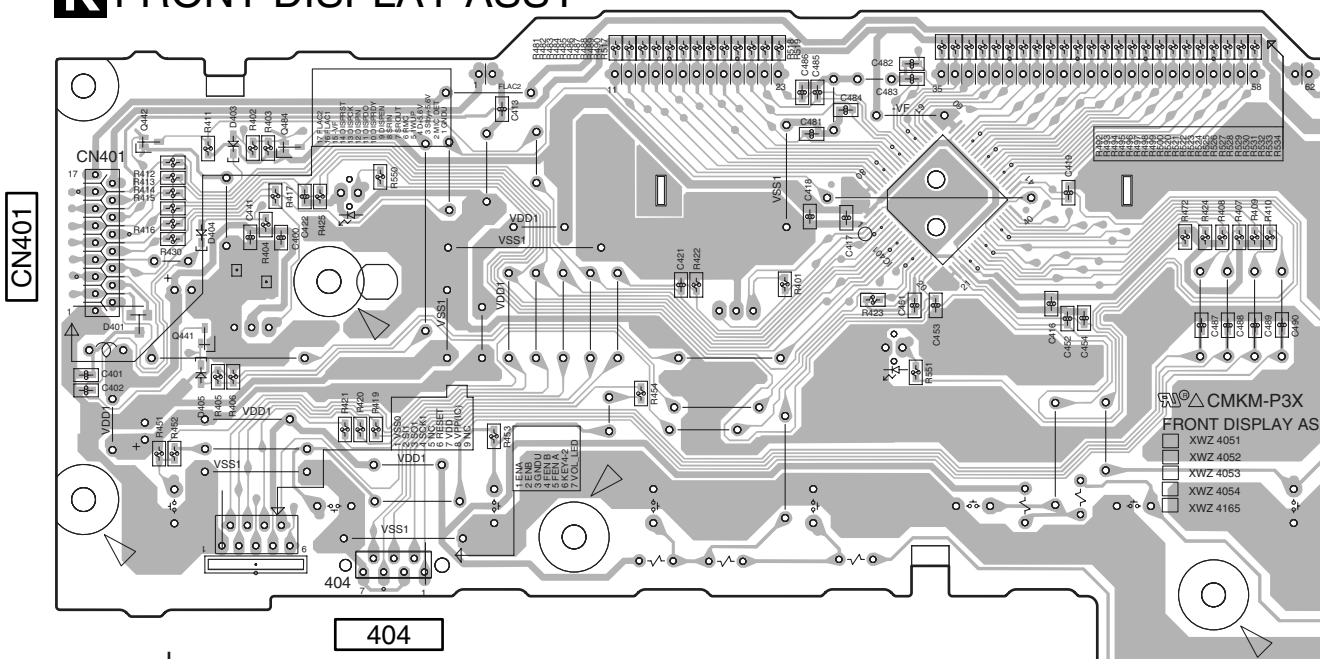


## L R. ENCODER ASSY

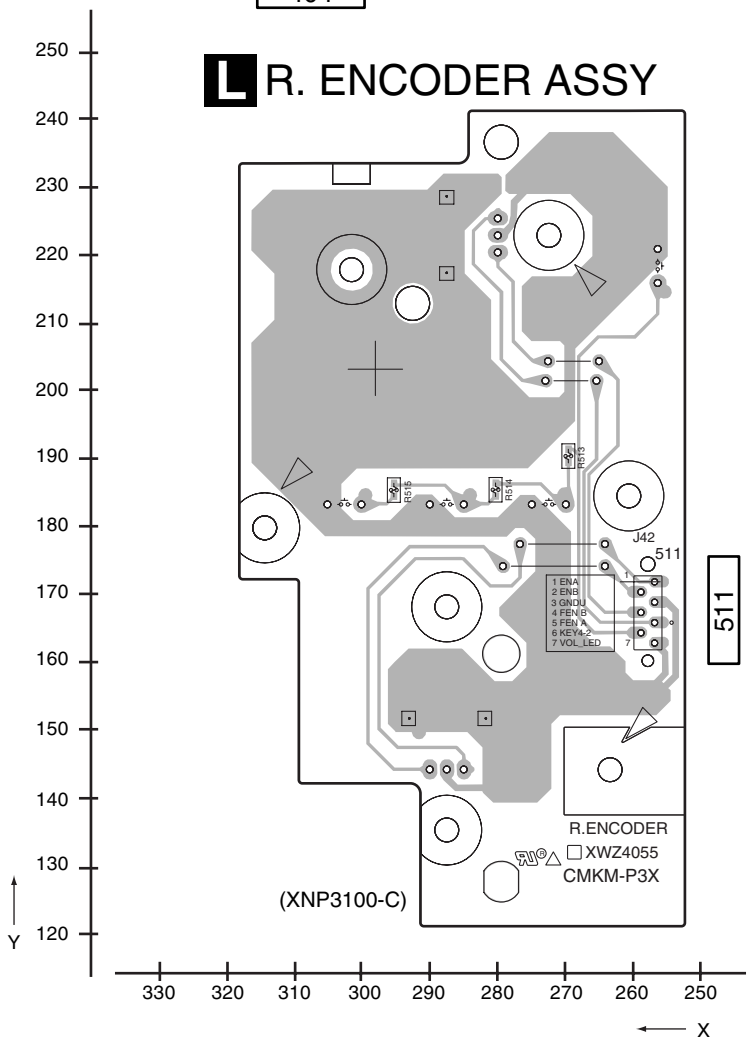


K L

SIDE B

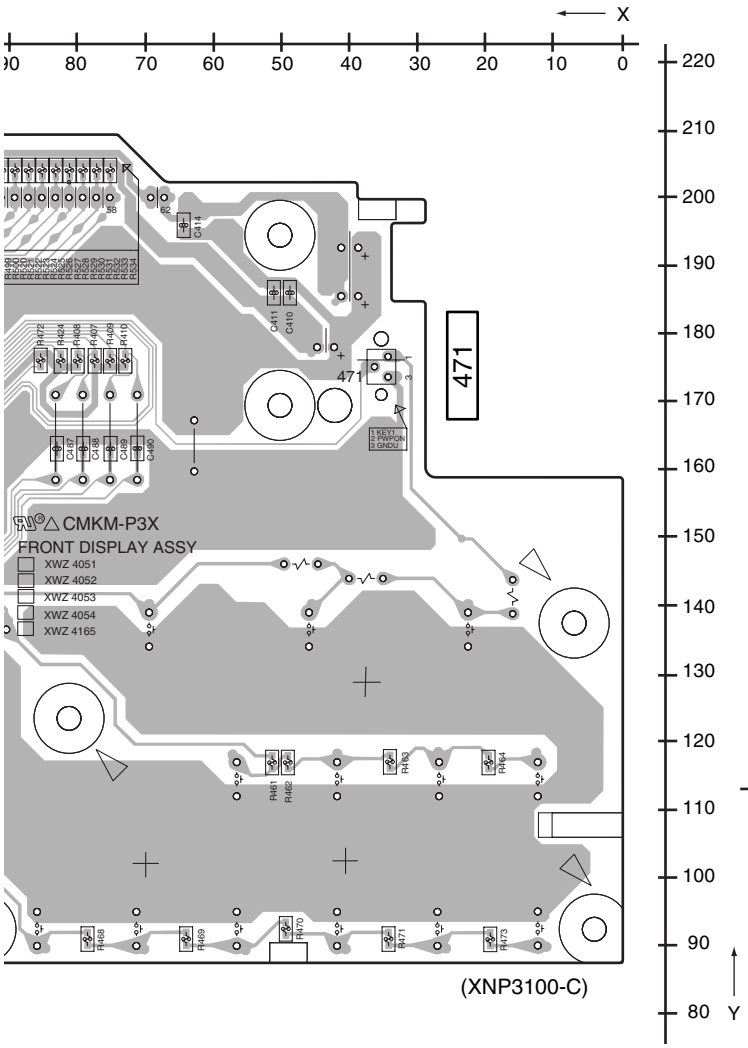


## M POWER KEY ASSY

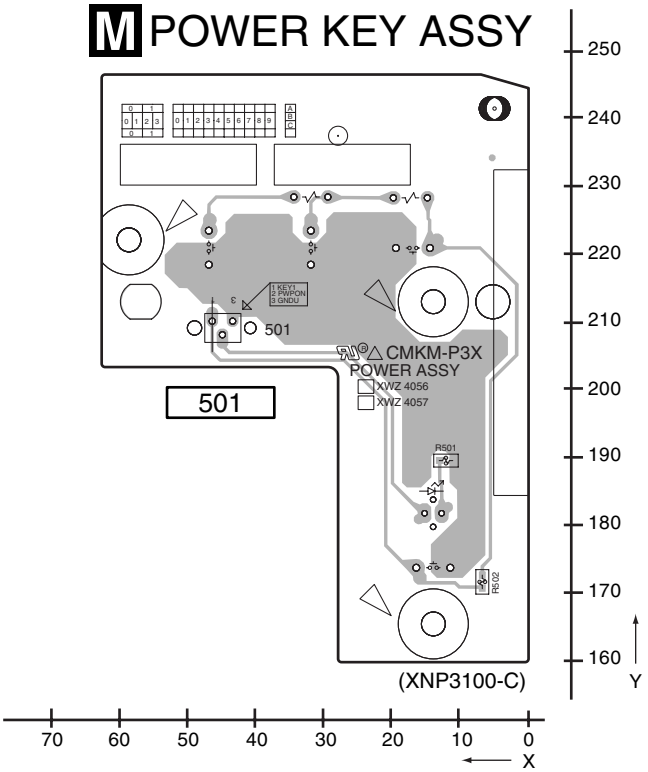


## G HEADPHONE ASSY

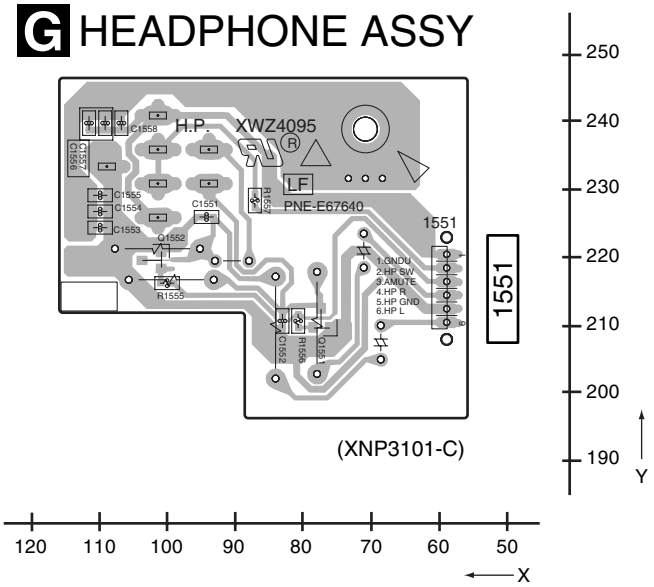


G K M

## 4.7 PRIMARY ASSY

SIDE A

SIDE A

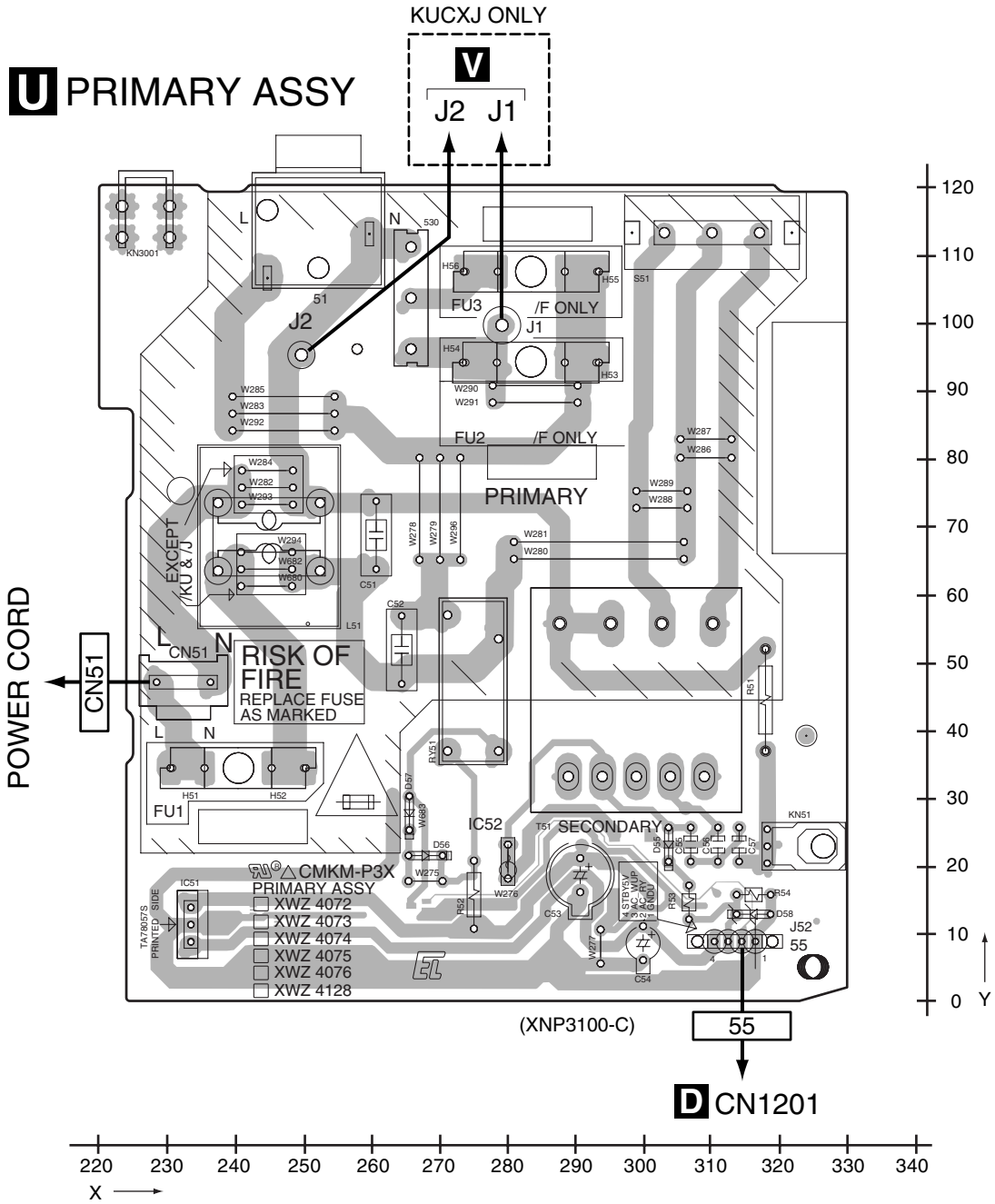


U

U

SIDE B

SIDE B

# U PRIMARY ASSY

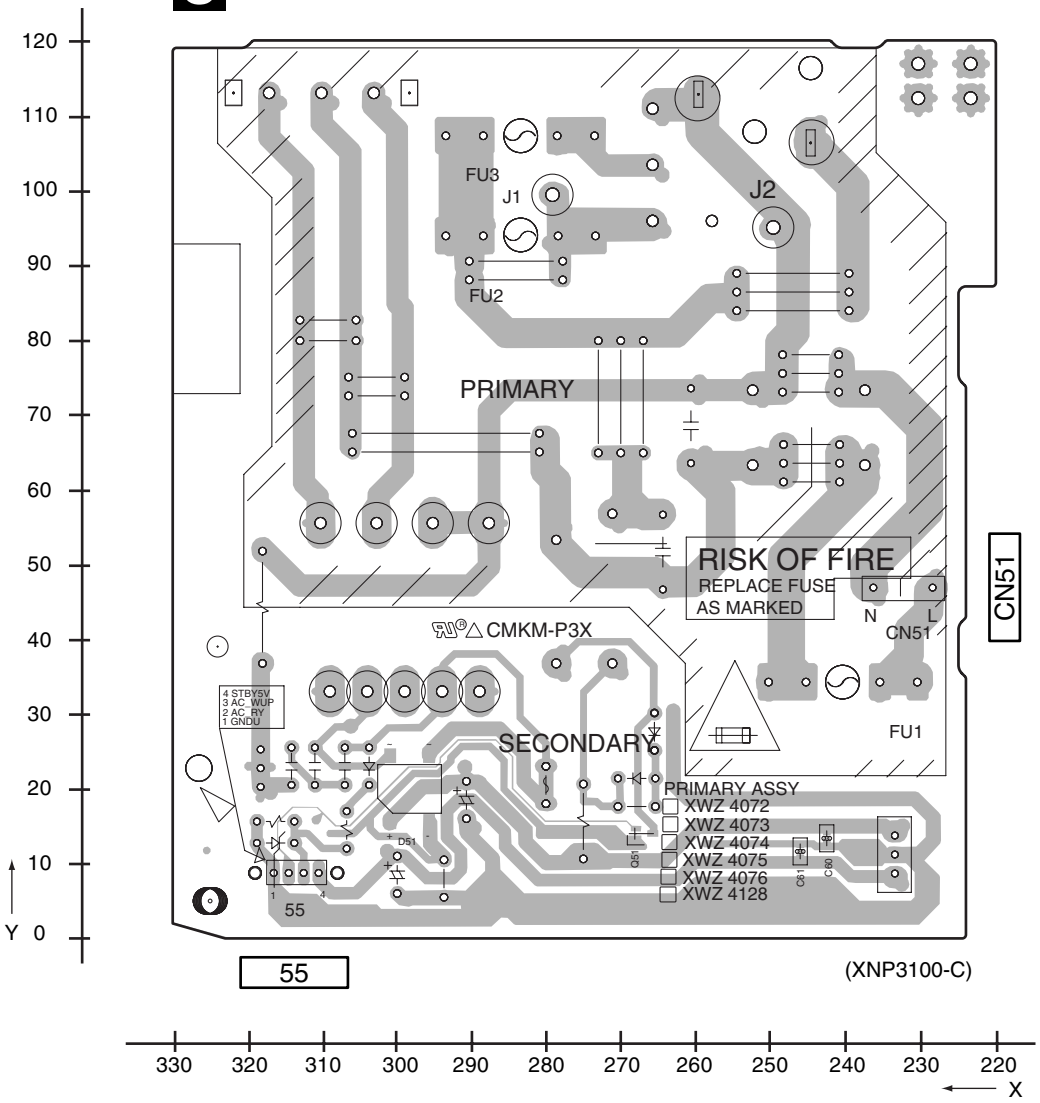

# 5. PCB PARTS LIST

*NOTES:*
- *Parts marked by "NSP" are generally unavailable because they are not in our Master Spare Parts List.*
- *The ⚠ mark found on some component parts indicates the importance of the safety factor of the part. Therefore, when replacing, be sure to use parts of identical designation.*
- *When ordering resistors, first convert resistance values into code form as shown in the following examples.*

*Ex.1 When there are 2 effective digits (any digit apart from 0), such as 560 ohm and 47k ohm (tolerance is shown by J=5%, and K=10%).*

*560 Ω → 56 x $10^1$ → 561 ..... RD1/4PU561J*
*47k Ω → 47 x $10^3$ → 473 ..... RD1/4PU473J*
*0.5 Ω → R50 ..... RN2HR50K*
*1 Ω → 1R0 ..... RS1P1R0K*

*Ex.2 When there are 3 effective digits (such as in high precision metal film resistors).*

*5.62k Ω → 562 x $10^1$ → 5621 ..... RN1/4PC5621F*

- *Meaning of the figures and others in the parentheses in the parts list.*

*Example) IC 301 is on the point (face A, 91 of x-axis, and 111 of y-axis) of the corresponding PC board.*

*IC 301 (A, 91, 111) IC NJM2068V*

## LIST OF ASSEMBLIES

| Mark | Symbol and Description | SX-316-S /KUCXJ | SX-316-S /MYXJ5 |
|---|---|---|---|
| | 1..MAIN ASSY | XWK3227 | XWK3244 |
| | 1..DSP ASSY | AWX8573 | AWX8573 |
| NSP | 1..AMP ASSY | XWK3217 | XWK3241 |
| | 2..POWER PACK ASSY | XWZ4080 | XWZ4117 |
| | 2..TRANS2 ASSY | XWZ4090 | XWZ4092 |
| | 2..TRANS3 ASSY | XWZ4079 | XWZ4079 |
| | 2..HEADPHONE ASSY | XWZ4095 | XWZ4095 |
| | 2..BINDER ASSY | XWZ4199 | XWZ4199 |
| NSP | 1..COMPLEX ASSY | XWK3207 | XWK3237 |
| | 2..FRONT DISPLAY ASSY | XWZ4165 | XWZ4165 |
| | 2..R. ENCODER ASSY | XWZ4055 | XWZ4055 |
| | 2..POWER KEY ASSY | XWZ4056 | XWZ4056 |
| | 2..DIGITAL IN ASSY | XWZ4066 | XWZ4066 |
| | 2..FRONT INPUT ASSY | XWZ4124 | XWZ4124 |
| | 2..PRIMARY ASSY | XWZ4128 | XWZ4073 |
| | 2..REGULATOR ASSY | XWZ4077 | XWZ4077 |
| | 2..TRANS1 ASSY | XWZ4078 | Not used |
| | 2..TRANS4 ASSY | XWZ4093 | XWZ4093 |
| | 1..FM/AM TUNER UNIT | AXX7210 | AXX7170 |

## ■ CONTRAST OF PCB ASSEMBLIES

### D TRANS2 ASSY

XWZ4092 and XWZ4090 are constructed the same except for the following:

| Mark | Symbol and Description | XWZ4090 | XWZ4092 |
|---|---|---|---|
| ⚠ | IC853 PROTECTOR(4A) | AEK7018 | Not used |
| ⚠ | IC853 PROTECTOR(7A) | Not used | AEK7021 |

### U PRIMARY ASSY

XWZ4073 and XWZ4128 are constructed the same except for the following:

| Mark | Symbol and Description | XWZ4128 | XWZ4073 |
|---|---|---|---|
| | D57 | Not used | 1SS133 |
| ⚠ | L51 | Not used | XTF3004 |
| ⚠ | T51 STANDBY TRANSFORMER | ATT7043 | ATT7040 |
| ⚠ | 530 3P TERMINAL | Not used | AKC-081 |
| ⚠ | R51 (2.2M, 1/2W) | RCN1080 | Not used |

# ■ PCB PARTS LIST FOR SX-316/KUCXJ UNLESS OTHER WISE NOTED

## A MAIN ASSY (XWK3227)

### MISCELLANEOUS

| Mark No. | Description | Part No. |
|---|---|---|
| IC 103 | (A,198,72) OP-AMP IC | HA17558AF |
| IC 104 | (A,198,56) OP-AMP IC | HA17558AF |
| IC 105 | (A,198,87) OP-AMP IC | HA17558AF |
| IC 107 | (A,216,88) OP-AMP IC | HA17558AF |
| IC 108 | (B,255,64) 8CH E-VOL | R2S15205FP |
| IC 251 | (A,85,102) OP-AMP IC | HA17558AF |
| IC 310 | (A,142,40) OP-AMP IC | BA4560RF |
| IC 311 | (A,152,59) OP-AMP IC | BA4560RF |
| IC 312 | (A,142,77) OP-AMP IC | BA4560RF |
| IC 9001 | (B,82,64) CPU | PEG217A |
| IC 9002 | (A,103,44) EEPROM | BR24L16FV-W |
| Q 252 | (A,68,105) TRANSISTOR | 2SD1858X |
| Q 253 | (A,75,108) TRANSISTOR | RT1N241M |
| Q 254 | (A,72,98) DIGITAL TR(SC-70) | RT1P241M |
| Q 255 | (A,75,98) TRANSISTOR | RT1N241M |
| Q 256 | (A,75,94) CHIP TRANSISTOR | 2SD2704K |
| Q 257 | (A,78,108) TRANSISTOR | 2SA1576A |
| Q 361 | (A,166,78) CHIP TRANSISTOR | 2SD2704K |
| Q 9001 | (A,125,87) DIGITAL TR(SC-70) | RT1N431M |
| Q 9002 | (A,66,80) DIGITAL TR(SC-70) | RT1P241M |
| Q 9003 | (A,65,75) DIGITAL TR(SC-70) | RT1P241M |
| Q 9007 | (A,69,85) TRANSISTOR | DTC143TK |
| Q 9064 | (A,59,80) DIGITAL TR(SC-70) | RT1P241M |
| Q 9065 | (A,55,78) TRANSISTOR | UMD2N |
| D 103 | (B,173,155) DIODE | DAN217U |
| D 105 | (B,163,37) DIODE | DAN217U |
| D 107 | (B,166,37) DIODE | DAN217U |
| D 251 | (A,83,96) DIODE | DAN217U |
| D 253 | (A,70,114) DIODE | UDZS27(B) |
| D 254 | (A,90,104) DIODE | UDZS5R1(B) |
| D 311 | (B,259,93) DIODE | 1SS355 |
| D 312 | (B,268,93) DIODE | 1SS355 |
| D 331 | (B,260,87) DIODE | UDZS6R8(B) |
| D 332 | (B,263,87) DIODE | UDZS6R8(B) |
| D 9001 | (A,125,103) DIODE | DAP202U |
| D 9002 | (A,119,103) DIODE | DAP202U |
| D 9003 | (A,122,103) DIODE | DAN202U |
| D 9006 | (B,99,89) DIODE | DAN217U |
| D 9007 | (B,91,89) DIODE | DAN217U |
| D 9010 | (A,128,88) DIODE | 1SS355 |
| D 9011 | (A,60,75) DIODE | DAN202U |
| D 9064 | (A,58,75) DIODE | DAP202U |
| D 9065 | (A,63,80) DIODE | DAP202U |
| D 9068 | (A,53,81) DIODE | 1SS355 |
| L 101 | (B,260,98) CHIP SOLID INDUCTOR | QTL1013 |
| L 102 | (B,265,97) CHIP SOLID INDUCTOR | QTL1013 |
| L 5002 | (A,257,104) CHIP SOLID INDUCTOR | QTL1013 |
| L 9001 | (A,123,107) CHIP SOLID INDUCTOR | ATL7002 |
| L 9002 | (A,121,107) CHIP SOLID INDUCTOR | ATL7002 |
| L 9003 | (A,106,98) RADIAL INDUCTOR | LFCA2R2J |
| X 9001 | (A,96,53) CERAMIC RESONATOR (15.7 MHz) | XSS3004 |
| CN101 | (A,41,27) CONNECTOR | CKS3382 |
| CN103 | (A,230,17) 11P CONNECTOR | 52044-1145 |
| CN107 | (A,39,99) 3P JUMPER CONNECTOR | 52147-0310 |
| CN109 | (A,230,113) 19P SOCKET | XKP3054 |
| CN111 | (A,276,113) 21P SOCKET | XKP3091 |
| CN112 | (A,91,41) CONNECTOR | CKS3382 |
| CN114 | (A,189,113) 21P SOCKET | XKP3091 |
| CN126 | (A,302,98) 6P PIN JACK | XKB3055 |
| CN251 | (A,39,83) 3P JUMPER CONNECTOR | 52147-0310 |
| CN252 | (A,37,69) 3P TOP POST | B3B-EH |

### RESISTORS

| Mark No. | Description | Part No. |
|---|---|---|
| R 107 | (B,283,87) | RS1/16S331J |
| R 108 | (B,293,81) | RS1/16S331J |
| R 111 | (B,283,115) | RS1/16S222J |
| R 112 | (B,283,106) | RS1/16S222J |
| R 113 | (B,283,101) | RS1/16S331J |
| R 114 | (B,293,96) | RS1/16S331J |
| R 145 | (A,71,73) | RS1/16S102J |
| R 146 | (A,71,74) | RS1/16S102J |
| R 147 | (B,233,67) | RS1/16S472J |
| R 148 | (B,228,62) | RS1/16S472J |
| R 149 | (A,259,45) | RS1/16S104J |
| R 156 | (B,295,107) | RS1/16S0R0J |
| R 157 | (B,293,114) | RS1/16S0R0J |
| R 180 | (B,278,97) | RS1/16S0R0J |
| R 181 | (B,272,78) | RS1/16S0R0J |
| R 201 | (A,189,85) | RS1/16S473J |
| R 202 | (A,189,90) | RS1/16S473J |
| R 203 | (B,187,85) | RS1/16S392J |
| R 204 | (B,187,91) | RS1/16S392J |
| R 205 | (B,189,85) | RS1/16S392J |
| R 206 | (B,189,91) | RS1/16S392J |
| R 207 | (B,191,85) | RS1/16S392J |
| R 208 | (B,191,91) | RS1/16S392J |
| R 209 | (B,198,85) | RS1/16S392J |
| R 210 | (B,198,91) | RS1/16S392J |
| R 211 | (B,200,85) | RS1/16S332J |
| R 212 | (B,200,91) | RS1/16S332J |
| R 213 | (B,202,85) | RS1/16S680J |
| R 214 | (B,202,91) | RS1/16S680J |
| R 219 | (B,216,84) | RS1/16S0R0J |
| R 220 | (B,215,91) | RS1/16S0R0J |
| R 221 | (B,220,84) | RS1/16S472J |
| R 222 | (B,219,91) | RS1/16S472J |
| R 225 | (B,225,84) | RS1/16S392J |
| R 226 | (B,225,91) | RS1/16S392J |
| R 227 | (B,231,84) | RS1/16S101J |
| R 228 | (B,233,89) | RS1/16S101J |
| R 233 | (A,231,91) | RS1/16S474J |
| R 234 | (A,231,84) | RS1/16S474J |
| R 241 | (A,190,69) | RS1/16S473J |
| R 242 | (A,190,74) | RS1/16S473J |
| R 243 | (B,186,69) | RS1/16S332J |
| R 244 | (B,186,75) | RS1/16S332J |
| R 245 | (B,188,69) | RS1/16S332J |
| R 246 | (B,188,75) | RS1/16S332J |
| R 247 | (B,190,69) | RS1/16S332J |
| R 248 | (B,190,75) | RS1/16S332J |
| R 249 | (B,197,69) | RS1/16S332J |
| R 250 | (B,197,75) | RS1/16S332J |
| R 251 | (B,199,69) | RS1/16S182J |

| Mark No. | Description | Part No. |
|---|---|---|
| R 252 | (B,199,75) | RS1/16S182J |
| R 253 | (B,202,69) | RS1/16S0R0J |
| R 254 | (B,202,75) | RS1/16S0R0J |
| R 257 | (B,213,69) | RS1/16S101J |
| R 258 | (B,213,75) | RS1/16S101J |
| R 261 | (A,189,53) | RS1/16S473J |
| R 262 | (A,189,59) | RS1/16S473J |
| R 263 | (B,186,53) | RS1/16S332J |
| R 264 | (B,186,60) | RS1/16S332J |
| R 265 | (B,188,53) | RS1/16S332J |
| R 266 | (B,188,60) | RS1/16S682J |
| R 267 | (B,190,53) | RS1/16S332J |
| R 268 | (B,190,60) | RS1/16S393J |
| R 269 | (B,197,53) | RS1/16S332J |
| R 270 | (B,197,60) | RS1/16S122J |
| R 271 | (B,199,53) | RS1/16S182J |
| R 272 | (B,199,60) | RS1/16S272J |
| R 273 | (B,202,53) | RS1/16S0R0J |
| R 274 | (B,202,60) | RS1/16S271J |
| R 277 | (B,214,53) | RS1/16S101J |
| R 278 | (B,213,61) | RS1/16S101J |
| R 280 | (A,65,113) | RS1/16S0R0J |
| R 303 | (B,156,37) | RS1/16S101J |
| R 304 | (B,155,43) | RS1/16S101J |
| R 305 | (B,160,49) | RS1/16S101J |
| R 306 | (B,164,61) | RS1/16S101J |
| R 307 | (B,165,68) | RS1/16S101J |
| R 308 | (B,171,72) | RS1/16S101J |
| R 311 | (A,258,102) METAL OXIDE RESISTOR | RS1LMF101J |
| R 312 | (A,266,102) METAL OXIDE RESISTOR | RS1LMF101J |
| R 431 | (A,131,93) | RS1/16S104J |
| R 432 | (A,127,93) | RS1/16S104J |
| R 433 | (A,128,93) | RS1/16S104J |
| R 434 | (A,134,93) | RS1/16S104J |
| R 435 | (A,126,93) | RS1/16S104J |
| R 436 | (A,130,93) | RS1/16S104J |
| R 438 | (A,81,98) | RS1/16S104J |
| R 439 | (A,86,96) | RS1/16S104J |
| R 440 | (A,81,108) | RS1/16S754J |
| R 441 | (A,79,98) | RS1/16S222J |
| R 442 | (A,77,98) | RS1/16S104J |
| R 443 | (A,63,104) | RS1/16S471J |
| R 445 | (A,73,108) | RS1/16S223J |
| R 446 | (A,74,113) | RS1/16S104J |
| R 447 | (A,88,94) | RS1/16S472J |
| R 448 | (A,89,104) | RS1/16S104J |
| R 449 | (A,80,108) | RS1/16S102J |
| R 457 | (A,140,35) | RS1/16S182J |
| R 458 | (A,140,46) | RS1/16S182J |
| R 459 | (B,133,38) | RS1/16S103J |
| R 460 | (B,133,43) | RS1/16S103J |
| R 461 | (B,145,39) | RS1/16S104J |
| R 462 | (B,145,43) | RS1/16S104J |
| R 464 | (A,78,102) | RS1/16S0R0J |
| R 477 | (A,149,52) | RS1/16S182J |
| R 478 | (A,150,65) | RS1/16S182J |
| R 479 | (B,142,57) | RS1/16S103J |
| R 480 | (B,142,62) | RS1/16S103J |
| R 481 | (B,154,58) | RS1/16S104J |
| R 482 | (B,154,62) | RS1/16S104J |

| Mark No. | Description | Part No. |
|---|---|---|
| R 483 | (B,144,76) | RS1/16S104J |
| R 485 | (A,157,80) | RS1/16S472J |
| R 488 | (A,165,73) | RS1/16S0R0J |
| R 494 | (A,141,83) | RS1/16S911J |
| R 496 | (A,148,83) | RS1/16S272J |
| R 497 | (A,139,69) | RS1/16S182J |
| R 498 | (A,139,83) | RS1/16S152J |
| R 499 | (B,133,72) | RS1/16S103J |
| R 500 | (B,133,79) | RS1/16S104J |
| R 502 | (B,144,80) | RS1/16S822J |
| R 518 | (B,150,83) | RS1/16S0R0J |
| R 550 | (A,147,84) | RS1/16S472J |
| R 9002 | (A,129,89) | RS1/16S473J |
| R 9005 | (A,91,55) | RS1/16S0R0J |
| R 9006 | (B,103,89) | RS1/16S474J |
| R 9007 | (B,93,89) | RS1/16S474J |
| R 9008 | (A,86,90) | RS1/16S221J |
| R 9009 | (A,65,85) | RS1/16S473J |
| R 9010 | (B,115,45) | RS1/16S512J |
| R 9011 | (A,63,76) | RS1/16S102J |
| R 9012 | (A,63,73) | RS1/16S0R0J |
| R 9013 | (B,112,45) | RS1/16S471J |
| R 9014 | (B,104,54) | RS1/16S471J |
| R 9015 | (B,101,54) | RS1/16S471J |
| R 9016 | (B,99,54) | RS1/16S471J |
| R 9017 | (B,97,54) | RS1/16S471J |
| R 9018 | (B,95,54) | RS1/16S471J |
| R 9019 | (B,98,76) | RS1/16S471J |
| R 9020 | (B,99,76) | RS1/16S471J |
| R 9021 | (B,101,76) | RS1/16S471J |
| R 9022 | (B,103,76) | RS1/16S471J |
| R 9025 | (B,101,68) | RS1/16S0R0J |
| R 9026 | (B,107,68) | RS1/16S0R0J |
| R 9030 | (A,68,79) | RS1/16S470J |
| R 9031 | (B,69,48) | RS1/16S104J |
| R 9032 | (A,66,59) | RS1/16S104J |
| R 9033 | (B,89,48) | RS1/16S104J |
| R 9036 | (A,88,89) | RS1/16S221J |
| R 9037 | (A,124,99) | RS1/16S104J |
| R 9039 | (A,87,58) | RS1/16S104J |
| R 9041 | (B,117,45) | RS1/16S104J |
| R 9045 | (A,98,46) | RS1/16S471J |
| R 9046 | (A,107,45) | RS1/16S471J |
| R 9047 | (A,99,46) | RS1/16S103J |
| R 9048 | (A,98,43) | RS1/16S103J |
| R 9060 | (B,98,68) | RS1/16S473J |
| R 9062 | (B,87,48) | RS1/16S471J |
| R 9064 | (A,54,74) | RS1/16S103J |
| R 9065 | (A,56,74) | RS1/16S103J |
| R 9066 | (A,62,72) | RS1/16S103J |
| R 9067 | (A,57,83) | RS1/16S103J |
| R 9081 | (A,120,72) | RS1/16S221J |
| R 9082 | (A,122,69) | RS1/16S274J |

## CAPACITORS

| | | |
|---|---|---|
| C 115 | (B,262,98) | CKSRYB103K50 |
| C 116 | (B,267,97) | CKSRYB103K50 |
| C 117 | (A,287,109) | CCSRCH220J50 |
| C 118 | (B,285,109) | CCSRCH220J50 |
| C 131 | (A,280,87) | CEAT100M50 |

| Mark No. | Description | Part No. |
|---|---|---|
| C 132 | (A,280,80) | CEAT100M50 |
| C 135 | (A,280,114) | CEAT100M50 |
| C 136 | (A,280,106) | CEAT100M50 |
| C 137 | (A,280,101) | CEAT100M50 |
| C 138 | (A,280,93) | CEAT100M50 |
| C 139 | (A,53,95) | CEAT100M50 |
| C 140 | (A,53,100) | CEAT100M50 |
| C 141 | (A,256,82) | CKSRYB104K50 |
| C 145 | (B,256,81) | CCSRCH101J50 |
| C 146 | (B,258,81) | CCSRCH101J50 |
| C 147 | (B,253,81) | CKSRYB103K50 |
| C 148 | (B,238,67) | CKSRYB223K50 |
| C 149 | (B,235,67) | CKSRYB223K50 |
| C 150 | (B,231,67) | CKSRYB683K16 |
| C 151 | (B,49,51) | CKSRYB103K50 |
| C 152 | (B,230,62) | CKSRYB223K50 |
| C 153 | (B,234,62) | CKSRYB223K50 |
| C 154 | (B,232,62) | CKSRYB683K16 |
| C 155 | (A,226,62) | CEAT101M16 |
| C 156 | (A,229,56) | CEAT101M16 |
| C 157 | (A,236,56) | CEAT101M16 |
| C 158 | (A,232,50) | CEAT101M16 |
| C 159 | (A,241,50) | CEAT101M16 |
| C 160 | (A,234,44) | CEAT101M16 |
| C 161 | (A,241,44) | CEAT101M16 |
| C 162 | (A,248,44) | CEAT101M16 |
| C 165 | (A,240,86) | CEAT1R0M50 |
| C 166 | (A,248,86) | CEAT1R0M50 |
| C 179 | (B,294,76) | CKSRYB103K50 |
| C 180 | (A,277,16) | CKSRYB103K50 |
| C 199 | (A,281,50) | CKSRYB103K50 |
| C 201 | (A,183,85) | CEAT2R2M50 |
| C 202 | (A,184,92) | CEAT2R2M50 |
| C 203 | (A,191,85) | CCSRCH471J50 |
| C 204 | (A,191,90) | CCSRCH471J50 |
| C 205 | (A,193,85) | CCSRCH331J50 |
| C 206 | (A,194,90) | CCSRCH331J50 |
| C 207 | (B,193,85) | CCSRCH331J50 |
| C 208 | (B,193,91) | CCSRCH331J50 |
| C 213 | (A,223,84) | CEAT100M50 |
| C 214 | (A,223,90) | CEAT100M50 |
| C 215 | (B,233,84) | CKSRYB103K50 |
| C 216 | (B,231,89) | CKSRYB103K50 |
| C 217 | (A,202,85) | CKSRYB103K50 |
| C 218 | (A,202,90) | CKSRYB103K50 |
| C 219 | (A,221,87) | CKSRYB104K16 |
| C 220 | (A,210,93) | CKSRYB104K16 |
| C 241 | (A,183,70) | CEAT2R2M50 |
| C 242 | (A,183,77) | CEAT2R2M50 |
| C 243 | (A,192,69) | CCSRCH101J50 |
| C 244 | (A,192,74) | CCSRCH101J50 |
| C 245 | (A,194,69) | CCSRCH331J50 |
| C 246 | (A,194,74) | CCSRCH331J50 |
| C 247 | (B,193,69) | CCSRCH331J50 |
| C 248 | (B,193,75) | CCSRCH331J50 |
| C 249 | (A,205,69) | CEAT100M50 |
| C 250 | (A,205,75) | CEAT100M50 |
| C 251 | (A,204,65) | CKSRYB103K50 |
| C 252 | (A,211,78) | CKSRYB103K50 |
| C 253 | (B,43,89) | CKSRYB103K50 |

| Mark No. | Description | Part No. |
|---|---|---|
| C 254 | (A,58,108) ELECT. CAPACITOR | CEAT101M25 |
| C 255 | (A,51,108) ELECT. CAPACITOR | CEANP470M25 |
| C 256 | (A,81,105) | CKSRYB103K50 |
| C 257 | (B,216,69) | CKSRYB472K50 |
| C 258 | (B,217,75) | CKSRYB472K50 |
| C 261 | (A,183,54) | CEAT2R2M50 |
| C 262 | (A,183,62) | CEAT2R2M50 |
| C 263 | (A,192,53) | CCSRCH101J50 |
| C 264 | (A,191,59) | CKSRYB223K50 |
| C 265 | (A,194,53) | CCSRCH331J50 |
| C 266 | (A,194,59) | CKSRYB103K50 |
| C 267 | (B,193,53) | CCSRCH331J50 |
| C 268 | (B,193,60) | CKSRYB562K50 |
| C 269 | (A,205,54) | CEAT100M50 |
| C 270 | (A,205,60) | CEAT100M50 |
| C 271 | (A,203,51) | CKSRYB103K50 |
| C 272 | (A,210,64) | CKSRYB103K50 |
| C 277 | (B,216,53) | CKSRYB472K50 |
| C 278 | (B,215,61) | CKSRYB472K50 |
| C 321 | (A,153,38) | CEAT100M50 |
| C 322 | (A,153,45) | CEAT100M50 |
| C 325 | (A,136,39) ELECT. CAPACITOR | CEAT220M50 |
| C 326 | (A,136,46) ELECT. CAPACITOR | CEAT220M50 |
| C 327 | (A,132,42) | CKSRYB103K50 |
| C 328 | (A,132,38) | CKSRYB103K50 |
| C 333 | (A,255,93) | CEAT101M10 |
| C 334 | (A,268,81) | CEAT101M10 |
| C 341 | (A,161,56) | CEAT100M50 |
| C 342 | (A,161,63) | CEAT100M50 |
| C 345 | (A,145,56) ELECT. CAPACITOR | CEAT220M50 |
| C 346 | (A,145,63) ELECT. CAPACITOR | CEAT220M50 |
| C 347 | (A,140,64) | CKSRYB103K50 |
| C 348 | (A,141,58) | CKSRYB103K50 |
| C 361 | (A,161,70) | CEAT100M50 |
| C 362 | (A,169,70) ELECT. CAPACITOR | CEATR22M50 |
| C 364 | (A,139,84) | CKSRYB472K50 |
| C 365 | (A,136,73) ELECT. CAPACITOR | CEAT220M50 |
| C 366 | (A,136,80) ELECT. CAPACITOR | CEANP4R7M50 |
| C 367 | (A,135,88) | CKSRYB103K50 |
| C 368 | (A,147,75) | CKSRYB103K50 |
| C 370 | (A,161,74) | CEAT1R0M50 |
| C 392 | (B,91,95) | CKSRYB102K50 |
| C 1031 | (A,286,57) | CCSRCH220J50 |
| C 1041 | (B,287,55) | CCSRCH220J50 |
| C 5001 | (B,233,10) | CKSRYB102K50 |
| C 5002 | (B,235,10) | CKSRYB103K50 |
| C 5003 | (B,237,10) | CKSRYB105K10 |
| C 5025 | (A,166,12) | CKSRYB102K50 |
| C 5026 | (A,169,13) | CKSRYB102K50 |
| C 5027 | (A,177,12) | CKSRYB102K50 |
| C 5028 | (A,179,13) | CCSRCH220J50 |
| C 9004 | (A,121,94) | CKSRYB103K50 |
| C 9005 | (A,116,99) | CEJQ2R2M50 |
| C 9006 | (A,122,88) | CKSRYB105K10 |
| C 9007 | (A,79,92) ELECT. CAPACITOR | CEAT331M6R3 |
| C 9008 | (B,77,90) | CKSRYB103K50 |
| C 9011 | (B,95,89) | CKSRYB473K25 |
| C 9014 | (B,87,88) | CKSRYB473K25 |
| C 9015 | (A,100,95) | CKSRYB102K50 |
| C 9018 | (B,72,72) | CKSRYB104K50 |

| Mark No. | Description | Part No. |
|---|---|---|
| C 9081 | (A,120,69) | CKSRYB103K50 |

## A MAIN ASSY (XWK3244)

### MISCELLANEOUS

| Mark No. | Description | Part No. |
|---|---|---|
| IC 103 | (A,198,72) OP-AMP IC | HA17558AF |
| IC 104 | (A,198,56) OP-AMP IC | HA17558AF |
| IC 105 | (A,198,87) OP-AMP IC | HA17558AF |
| IC 107 | (A,216,88) OP-AMP IC | HA17558AF |
| IC 108 | (B,255,64) 8CH E-VOL | R2S15205FP |
| IC 251 | (A,85,102) OP-AMP IC | HA17558AF |
| IC 310 | (A,142,40) OP-AMP IC | BA4560RF |
| IC 311 | (A,152,59) OP-AMP IC | BA4560RF |
| IC 312 | (A,142,77) OP-AMP IC | BA4560RF |
| IC 5001 | (A,69,19) RDS DECORDER IC | LC72725M |
| IC 9001 | (B,82,64) CPU | PEG217A |
| IC 9002 | (A,103,44) EEPROM | BR24L16FV-W |
| Q 252 | (A,68,105) TRANSISTOR | 2SD1858X |
| Q 253 | (A,75,108) TRANSISTOR | RT1N241M |
| Q 254 | (A,72,98) DIGITAL TR(SC-70) | RT1P241M |
| Q 255 | (A,75,98) TRANSISTOR | RT1N241M |
| Q 256 | (A,75,94) CHIP TRANSISTOR | 2SD2704K |
| Q 257 | (A,78,108) TRANSISTOR | 2SA1576A |
| Q 361 | (A,166,78) CHIP TRANSISTOR | 2SD2704K |
| Q 9001 | (A,125,87) DIGITAL TR(SC-70) | RT1N431M |
| Q 9002 | (A,66,80) DIGITAL TR(SC-70) | RT1P241M |
| Q 9003 | (A,65,75) DIGITAL TR(SC-70) | RT1P241M |
| Q 9007 | (A,69,85) TRANSISTOR | DTC143TK |
| Q 9064 | (A,59,80) DIGITAL TR(SC-70) | RT1P241M |
| Q 9065 | (A,55,78) TRANSISTOR | UMD2N |
| D 103 | (B,173,35) DIODE | DAN217U |
| D 105 | (B,163,37) DIODE | DAN217U |
| D 107 | (B,166,37) DIODE | DAN217U |
| D 251 | (A,83,96) DIODE | DAN217U |
| D 253 | (A,70,114) DIODE | UDZS27(B) |
| D 254 | (A,90,104) DIODE | UDZS5R1(B) |
| D 311 | (B,259,93) DIODE | 1SS355 |
| D 312 | (B,268,93) DIODE | 1SS355 |
| D 331 | (B,260,87) DIODE | UDZS6R8(B) |
| D 332 | (B,263,87) DIODE | UDZS6R8(B) |
| D 9001 | (A,125,103) DIODE | DAP202U |
| D 9002 | (A,119,103) DIODE | DAP202U |
| D 9003 | (A,122,103) DIODE | DAN202U |
| D 9006 | (B,99,89) DIODE | DAN217U |
| D 9007 | (B,91,89) DIODE | DAN217U |
| D 9010 | (A,128,88) DIODE | 1SS355 |
| D 9011 | (A,60,75) DIODE | DAN202U |
| D 9064 | (A,58,75) DIODE | DAP202U |
| D 9065 | (A,63,80) DIODE | DAP202U |
| D 9068 | (A,53,81) DIODE | 1SS355 |
| L 101 | (B,260,98) CHIP SOLID INDUCTOR | QTL1013 |
| L 102 | (B,265,97) CHIP SOLID INDUCTOR | QTL1013 |
| L 5002 | (A,257,104) CHIP SOLID INDUCTOR | QTL1013 |
| L 9001 | (A,123,107) CHIP SOLID INDUCTOR | ATL7002 |
| L 9002 | (A,121,107) CHIP SOLID INDUCTOR | ATL7002 |
| L 9003 | (A,106,98) RADIAL INDUCTOR | LFCA2R2J |
| X 5001 | (A,67,27) CRYSTAL RESONATOR (4.332 MHz) | ASS7004 |
| X 9001 | (A,96,53) CERAMIC RESONATOR (15.7 MHz) | XSS3004 |
| CN101 | (A,41,27) CONNECTOR | CKS3382 |
| CN103 | (A,230,17) 11P CONNECTOR | 52044-1145 |
| CN107 | (A,39,99) CONNECTOR POST | B3B-PH |
| CN109 | (A,230,113) 19P SOCKET | XKP3054 |
| CN111 | (A,276,113) 21P SOCKET | XKP3091 |
| CN112 | (A,91,41) CONNECTOR | CKS3382 |
| CN114 | (A,189,113) 21P SOCKET | XKP3091 |
| CN126 | (A,302,98) 6P PIN JACK | XKB3055 |
| CN251 | (A,39,83) 3P JUMPER CONNECTOR | 52147-0310 |
| CN252 | (A,37,69) 3P TOP POST | B3B-EH |

### RESISTORS

| Mark No. | Description | Part No. |
|---|---|---|
| R 107 | (B,283,87) | RS1/16S331J |
| R 108 | (B,293,81) | RS1/16S331J |
| R 111 | (B,283,115) | RS1/16S222J |
| R 112 | (B,283,106) | RS1/16S222J |
| R 113 | (B,283,101) | RS1/16S331J |
| R 114 | (B,293,96) | RS1/16S331J |
| R 145 | (A,71,73) | RS1/16S102J |
| R 146 | (A,71,74) | RS1/16S102J |
| R 147 | (B,233,67) | RS1/16S472J |
| R 148 | (B,228,62) | RS1/16S472J |
| R 149 | (A,259,45) | RS1/16S104J |
| R 156 | (B,295,107) | RS1/16S0R0J |
| R 157 | (B,293,114) | RS1/16S0R0J |
| R 180 | (B,278,97) | RS1/16S0R0J |
| R 181 | (B,272,78) | RS1/16S0R0J |
| R 201 | (A,189,85) | RS1/16S473J |
| R 202 | (A,189,90) | RS1/16S473J |
| R 203 | (B,187,85) | RS1/16S392J |
| R 204 | (B,187,91) | RS1/16S392J |
| R 205 | (B,189,85) | RS1/16S392J |
| R 206 | (B,189,91) | RS1/16S392J |
| R 207 | (B,191,85) | RS1/16S392J |
| R 208 | (B,191,91) | RS1/16S392J |
| R 209 | (B,198,85) | RS1/16S392J |
| R 210 | (B,198,91) | RS1/16S392J |
| R 211 | (B,200,85) | RS1/16S332J |
| R 212 | (B,200,91) | RS1/16S332J |
| R 213 | (B,202,85) | RS1/16S680J |
| R 214 | (B,202,91) | RS1/16S680J |
| R 219 | (B,216,84) | RS1/16S0R0J |
| R 220 | (B,215,91) | RS1/16S0R0J |
| R 221 | (B,220,84) | RS1/16S472J |
| R 222 | (B,219,91) | RS1/16S472J |
| R 225 | (B,225,84) | RS1/16S392J |
| R 226 | (B,225,91) | RS1/16S392J |
| R 227 | (B,231,84) | RS1/16S101J |
| R 228 | (B,233,89) | RS1/16S101J |
| R 233 | (A,231,91) | RS1/16S474J |
| R 234 | (A,231,84) | RS1/16S474J |
| R 241 | (A,190,69) | RS1/16S473J |
| R 242 | (A,190,74) | RS1/16S473J |
| R 243 | (B,186,69) | RS1/16S332J |
| R 244 | (B,186,75) | RS1/16S332J |
| R 245 | (B,188,69) | RS1/16S332J |
| R 246 | (B,188,75) | RS1/16S332J |
| R 247 | (B,190,69) | RS1/16S332J |
| R 248 | (B,190,75) | RS1/16S332J |
| R 249 | (B,197,69) | RS1/16S332J |

| Mark No. | Description | Part No. |
|---|---|---|
| R 250 | (B,197,75) | RS1/16S332J |
| R 251 | (B,199,69) | RS1/16S182J |
| R 252 | (B,199,75) | RS1/16S182J |
| R 253 | (B,202,69) | RS1/16S0R0J |
| R 254 | (B,202,75) | RS1/16S0R0J |
| R 257 | (B,213,69) | RS1/16S101J |
| R 258 | (B,213,75) | RS1/16S101J |
| R 261 | (A,189,53) | RS1/16S473J |
| R 262 | (A,189,59) | RS1/16S473J |
| R 263 | (B,186,53) | RS1/16S332J |
| R 264 | (B,186,60) | RS1/16S332J |
| R 265 | (B,188,53) | RS1/16S332J |
| R 266 | (B,188,60) | RS1/16S682J |
| R 267 | (B,190,53) | RS1/16S332J |
| R 268 | (B,190,60) | RS1/16S393J |
| R 269 | (B,197,53) | RS1/16S332J |
| R 270 | (B,197,60) | RS1/16S122J |
| R 271 | (B,199,53) | RS1/16S182J |
| R 272 | (B,199,60) | RS1/16S272J |
| R 273 | (B,202,53) | RS1/16S0R0J |
| R 274 | (B,202,60) | RS1/16S271J |
| R 277 | (B,214,53) | RS1/16S101J |
| R 278 | (B,213,61) | RS1/16S101J |
| R 280 | (A,65,113) | RS1/16S0R0J |
| R 303 | (B,156,37) | RS1/16S101J |
| R 304 | (B,155,43) | RS1/16S101J |
| R 305 | (B,160,49) | RS1/16S101J |
| R 306 | (B,164,61) | RS1/16S101J |
| R 307 | (B,165,68) | RS1/16S101J |
| R 308 | (B,171,72) | RS1/16S101J |
| R 311 | (A,258,102) METAL OXIDE RESISTOR | RS1LMF101J |
| R 312 | (A,266,102) METAL OXIDE RESISTOR | RS1LMF101J |
| R 431 | (A,131,93) | RS1/16S104J |
| R 432 | (A,127,93) | RS1/16S104J |
| R 433 | (A,128,93) | RS1/16S104J |
| R 434 | (A,134,93) | RS1/16S104J |
| R 435 | (A,126,93) | RS1/16S104J |
| R 436 | (A,130,93) | RS1/16S104J |
| R 438 | (A,81,98) | RS1/16S104J |
| R 439 | (A,86,96) | RS1/16S104J |
| R 440 | (A,81,108) | RS1/16S754J |
| R 441 | (A,79,98) | RS1/16S222J |
| R 442 | (A,77,98) | RS1/16S104J |
| R 443 | (A,63,104) | RS1/16S471J |
| R 445 | (A,73,108) | RS1/16S223J |
| R 446 | (A,74,233) | RS1/16S104J |
| R 447 | (A,88,94) | RS1/16S472J |
| R 448 | (A,89,104) | RS1/16S104J |
| R 449 | (A,80,108) | RS1/16S102J |
| R 453 | (A,146,35) | RS1/16S102J |
| R 454 | (A,142,46) | RS1/16S102J |
| R 455 | (A,146,38) | RS1/16S272J |
| R 456 | (A,147,43) | RS1/16S272J |
| R 457 | (A,140,35) | RS1/16S153J |
| R 458 | (A,140,46) | RS1/16S153J |
| R 459 | (B,133,38) | RS1/16S103J |
| R 460 | (B,133,43) | RS1/16S103J |
| R 461 | (B,145,39) | RS1/16S104J |
| R 462 | (B,145,43) | RS1/16S104J |
| R 464 | (A,78,102) | RS1/16S0R0J |

| Mark No. | Description | Part No. |
|---|---|---|
| R 473 | (A,151,53) | RS1/16S102J |
| R 474 | (A,152,65) | RS1/16S102J |
| R 475 | (A,157,52) | RS1/16S272J |
| R 476 | (A,158,66) | RS1/16S272J |
| R 477 | (A,149,52) | RS1/16S153J |
| R 478 | (A,150,65) | RS1/16S153J |
| R 479 | (B,142,57) | RS1/16S103J |
| R 480 | (B,142,62) | RS1/16S103J |
| R 481 | (B,154,58) | RS1/16S104J |
| R 482 | (B,154,62) | RS1/16S104J |
| R 483 | (B,144,76) | RS1/16S104J |
| R 484 | (A,165,71) | RS1/16S104J |
| R 485 | (A,157,80) | RS1/16S472J |
| R 488 | (A,165,73) | RS1/16S0R0J |
| R 493 | (A,141,71) | RS1/16S102J |
| R 494 | (A,141,83) | RS1/16S911J |
| R 495 | (A,147,71) | RS1/16S272J |
| R 496 | (A,148,83) | RS1/16S272J |
| R 497 | (A,139,69) | RS1/16S153J |
| R 498 | (A,139,83) | RS1/16S153J |
| R 499 | (B,133,72) | RS1/16S103J |
| R 500 | (B,133,79) | RS1/16S104J |
| R 502 | (B,144,80) | RS1/16S204J |
| R 518 | (B,150,83) | RS1/16S0R0J |
| R 5005 | (B,80,13) | RS1/16S0R0J |
| R 5010 | (A,76,24) | RS1/16S473J |
| R 5011 | (A,81,15) | RS1/16S473J |
| R 5012 | (A,82,12) | RS1/16S102J |
| R 5013 | (A,57,26) | RS1/16S102J |
| R 5016 | (B,82,13) | RS1/16S0R0J |
| R 5020 | (A,73,13) | RS1/16S0R0J |
| R 9002 | (A,129,89) | RS1/16S473J |
| R 9005 | (A,91,55) | RS1/16S0R0J |
| R 9006 | (B,103,89) | RS1/16S474J |
| R 9007 | (B,93,89) | RS1/16S474J |
| R 9008 | (A,86,90) | RS1/16S221J |
| R 9009 | (A,65,85) | RS1/16S473J |
| R 9010 | (B,115,45) | RS1/16S512J |
| R 9011 | (A,63,76) | RS1/16S102J |
| R 9012 | (A,63,73) | RS1/16S0R0J |
| R 9013 | (B,112,45) | RS1/16S471J |
| R 9014 | (B,104,54) | RS1/16S471J |
| R 9015 | (B,101,54) | RS1/16S471J |
| R 9016 | (B,99,54) | RS1/16S471J |
| R 9017 | (B,97,54) | RS1/16S471J |
| R 9018 | (B,95,54) | RS1/16S471J |
| R 9019 | (B,98,76) | RS1/16S471J |
| R 9020 | (B,99,76) | RS1/16S471J |
| R 9021 | (B,101,76) | RS1/16S471J |
| R 9022 | (B,103,76) | RS1/16S471J |
| R 9024 | (B,105,68) | RS1/16S472J |
| R 9025 | (B,101,68) | RS1/16S0R0J |
| R 9026 | (B,107,68) | RS1/16S751J |
| R 9030 | (A,68,79) | RS1/16S470J |
| R 9031 | (B,69,48) | RS1/16S104J |
| R 9032 | (A,66,59) | RS1/16S104J |
| R 9033 | (B,89,48) | RS1/16S104J |
| R 9036 | (A,88,89) | RS1/16S221J |
| R 9037 | (A,124,99) | RS1/16S104J |
| R 9039 | (A,87,58) | RS1/16S104J |

| Mark No. | Description | Part No. |
|---|---|---|
| R 9041 | (B,117,45) | RS1/16S104J |
| R 9045 | (A,98,46) | RS1/16S471J |
| R 9046 | (A,107,45) | RS1/16S471J |
| R 9047 | (A,99,46) | RS1/16S103J |
| R 9048 | (A,98,43) | RS1/16S103J |
| R 9060 | (B,98,68) | RS1/16S473J |
| R 9062 | (B,87,48) | RS1/16S471J |
| R 9064 | (A,54,74) | RS1/16S103J |
| R 9065 | (A,56,74) | RS1/16S103J |
| R 9066 | (A,62,72) | RS1/16S103J |
| R 9067 | (A,57,83) | RS1/16S103J |
| R 9081 | (A,120,72) | RS1/16S221J |
| R 9082 | (A,122,69) | RS1/16S274J |

## CAPACITORS

| Mark No. | Description | Part No. |
|---|---|---|
| C 115 | (B,262,98) | CKSRYB103K50 |
| C 116 | (B,267,97) | CKSRYB103K50 |
| C 117 | (A,287,109) | CCSRCH220J50 |
| C 118 | (B,285,109) | CCSRCH220J50 |
| C 131 | (A,280,87) | CEAT100M50 |
| C 132 | (A,280,80) | CEAT100M50 |
| C 135 | (A,280,114) | CEAT100M50 |
| C 136 | (A,280,106) | CEAT100M50 |
| C 137 | (A,280,101) | CEAT100M50 |
| C 138 | (A,280,93) | CEAT100M50 |
| C 139 | (A,53,95) | CEAT100M50 |
| C 140 | (A,53,100) | CEAT100M50 |
| C 141 | (A,256,82) | CKSRYB104K50 |
| C 145 | (B,256,81) | CCSRCH101J50 |
| C 146 | (B,258,81) | CCSRCH101J50 |
| C 147 | (B,253,81) | CKSRYB103K50 |
| C 148 | (B,238,67) | CKSRYB223K50 |
| C 149 | (B,235,67) | CKSRYB223K50 |
| C 150 | (B,231,67) | CKSRYB683K16 |
| C 151 | (B,49,51) | CKSRYB103K50 |
| C 152 | (B,230,62) | CKSRYB223K50 |
| C 153 | (B,234,62) | CKSRYB223K50 |
| C 154 | (B,232,62) | CKSRYB683K16 |
| C 155 | (A,226,62) | CEAT101M16 |
| C 156 | (A,229,56) | CEAT101M16 |
| C 157 | (A,236,56) | CEAT101M16 |
| C 158 | (A,232,50) | CEAT101M16 |
| C 159 | (A,241,50) | CEAT101M16 |
| C 160 | (A,234,44) | CEAT101M16 |
| C 161 | (A,241,44) | CEAT101M16 |
| C 162 | (A,248,44) | CEAT101M16 |
| C 165 | (A,240,86) | CEAT1R0M50 |
| C 166 | (A,248,86) | CEAT1R0M50 |
| C 179 | (B,294,76) | CKSRYB103K50 |
| C 180 | (A,277,16) | CKSRYB103K50 |
| C 199 | (A,281,50) | CKSRYB103K50 |
| C 201 | (A,183,85) | CEAT2R2M50 |
| C 202 | (A,184,92) | CEAT2R2M50 |
| C 203 | (A,191,85) | CCSRCH471J50 |
| C 204 | (A,191,90) | CCSRCH471J50 |
| C 205 | (A,193,85) | CCSRCH331J50 |
| C 206 | (A,194,90) | CCSRCH331J50 |
| C 207 | (B,193,85) | CCSRCH331J50 |
| C 208 | (B,193,91) | CCSRCH331J50 |
| C 213 | (A,223,84) | CEAT100M50 |
| C 214 | (A,223,90) | CEAT100M50 |
| C 215 | (B,233,84) | CKSRYB103K50 |
| C 216 | (B,231,89) | CKSRYB103K50 |
| C 217 | (A,202,85) | CKSRYB103K50 |
| C 218 | (A,202,90) | CKSRYB103K50 |
| C 219 | (A,221,87) | CKSRYB104K16 |
| C 220 | (A,210,93) | CKSRYB104K16 |
| C 241 | (A,183,70) | CEAT2R2M50 |
| C 242 | (A,183,77) | CEAT2R2M50 |
| C 243 | (A,192,69) | CCSRCH101J50 |
| C 244 | (A,192,74) | CCSRCH101J50 |
| C 245 | (A,194,69) | CCSRCH331J50 |
| C 246 | (A,194,74) | CCSRCH331J50 |
| C 247 | (B,193,69) | CCSRCH331J50 |
| C 248 | (B,193,75) | CCSRCH331J50 |
| C 249 | (A,205,69) | CEAT100M50 |
| C 250 | (A,205,75) | CEAT100M50 |
| C 251 | (A,204,65) | CKSRYB103K50 |
| C 252 | (A,211,78) | CKSRYB103K50 |
| C 253 | (B,43,89) | CKSRYB103K50 |
| C 254 | (A,58,108) ELECT. CAPACITOR | CEAT101M25 |
| C 255 | (A,51,108) ELECT. CAPACITOR | CEANP470M25 |
| C 256 | (A,81,105) | CKSRYB103K50 |
| C 257 | (B,216,69) | CKSRYB472K50 |
| C 258 | (B,217,75) | CKSRYB472K50 |
| C 261 | (A,183,54) | CEAT2R2M50 |
| C 262 | (A,183,62) | CEAT2R2M50 |
| C 263 | (A,192,53) | CCSRCH101J50 |
| C 264 | (A,191,59) | CKSRYB223K50 |
| C 265 | (A,194,53) | CCSRCH331J50 |
| C 266 | (A,194,59) | CKSRYB103K50 |
| C 267 | (B,193,53) | CCSRCH331J50 |
| C 268 | (B,193,60) | CKSRYB562K50 |
| C 269 | (A,205,54) | CEAT100M50 |
| C 270 | (A,205,60) | CEAT100M50 |
| C 271 | (A,203,51) | CKSRYB103K50 |
| C 272 | (A,210,64) | CKSRYB103K50 |
| C 277 | (B,216,53) | CKSRYB472K50 |
| C 278 | (B,215,61) | CKSRYB472K50 |
| C 321 | (A,153,38) | CEAT100M50 |
| C 322 | (A,153,45) | CEAT100M50 |
| C 323 | (A,145,35) | CCSRCH101J50 |
| C 324 | (A,140,47) | CCSRCH101J50 |
| C 325 | (A,136,39) ELECT. CAPACITOR | CEAT220M50 |
| C 326 | (A,136,46) ELECT. CAPACITOR | CEAT220M50 |
| C 327 | (A,132,42) | CKSRYB103K50 |
| C 328 | (A,132,38) | CKSRYB103K50 |
| C 333 | (A,255,93) | CEAT101M10 |
| C 334 | (A,268,81) | CEAT101M10 |
| C 341 | (A,161,56) | CEAT100M50 |
| C 342 | (A,161,63) | CEAT100M50 |
| C 343 | (A,149,51) | CCSRCH101J50 |
| C 344 | (A,150,66) | CCSRCH101J50 |
| C 345 | (A,145,56) ELECT. CAPACITOR | CEAT220M50 |
| C 346 | (A,145,63) ELECT. CAPACITOR | CEAT220M50 |
| C 347 | (A,140,64) | CKSRYB103K50 |
| C 348 | (A,141,58) | CKSRYB103K50 |
| C 361 | (A,161,70) | CEAT100M50 |
| C 362 | (A,169,70) | CEAT100M50 |
| C 363 | (A,139,68) | CCSRCH101J50 |

| Mark No. | Description | Part No. |
|---|---|---|
| C 364 | (A,139,84) | CKSRYB472K50 |
| C 365 | (A,136,73) ELECT. CAPACITOR | CEAT220M50 |
| C 366 | (A,136,80) ELECT. CAPACITOR | CEANP4R7M50 |
| C 367 | (A,135,88) | CKSRYB103K50 |
| C 368 | (A,147,75) | CKSRYB103K50 |
| C 370 | (A,161,74) | CEAT4R7M50 |
| C 392 | (B,91,95) | CKSRYB102K50 |
| C 1031 | (A,286,57) | CCSRCH220J50 |
| C 1041 | (B,287,55) | CCSRCH220J50 |
| C 5001 | (B,233,10) | CKSRYB102K50 |
| C 5002 | (B,235,10) | CKSRYB103K50 |
| C 5003 | (B,237,10) | CKSRYB105K10 |
| C 5011 | (A,77,16) | CEJQ100M50 |
| C 5013 | (A,54,17) | CCSRCH270J50 |
| C 5014 | (A,54,18) | CCSRCH270J50 |
| C 5015 | (A,59,20) | CEJQ470M16 |
| C 5016 | (A,54,15) | CKSRYB103K50 |
| C 5017 | (A,73,14) | CCSRCH561J50 |
| C 5020 | (A,69,13) | CKSRYB472K50 |
| C 5025 | (A,166,12) | CKSRYB102K50 |
| C 5026 | (A,169,13) | CKSRYB102K50 |
| C 5027 | (A,177,12) | CKSRYB102K50 |
| C 5028 | (A,179,13) | CCSRCH220J50 |
| C 9004 | (A,121,94) | CKSRYB103K50 |
| C 9005 | (A,116,99) | CEJQ2R2M50 |
| C 9006 | (A,122,88) | CKSRYB105K10 |
| C 9007 | (A,79,92) ELECT. CAPACITOR | CEAT331M6R3 |
| C 9008 | (B,77,90) | CKSRYB103K50 |
| C 9011 | (B,95,89) | CKSRYB473K25 |
| C 9014 | (B,87,88) | CKSRYB473K25 |
| C 9015 | (A,100,95) | CKSRYB102K50 |
| C 9018 | (B,72,72) | CKSRYB104K50 |
| C 9081 | (A,120,69) | CKSRYB103K50 |

## B DSP ASSY

### MISCELLANEOUS

| Mark No. | Description | Part No. |
|---|---|---|
| IC 501 | (B,118,52) IC | TC74HCU04AF |
| IC 601 | (A,107,50) DA I/F TRANSCEIVER | AK4114VQ |
| IC 701 | (A,75,43) CODEC IC | AK4628AVQ |
| IC 801 | (A,42,53) DSP IC | DSPC56371AF180 |
| IC 802 | (A,44,38) IC | TC7WU04FU |
| IC 871 | (B,63,53) IC | TC7WH125FU |
| ⚠ IC 901 | (B,120,30) IC | NJM2391DL1-33 |
| ⚠ IC 902 | (B,94,36) REGULATOR IC | LM1117DT-ADJ |
| IC 952 | (B,19,48) OCTAL BUS BUFFER IC | TC74VHCT244AFTS1 |
| D 701 | (A,79,33) DIODE | DAP202K |
| D 702 | (B,80,32) DIODE | DAN202K |
| D 901 | (B,116,38) DIODE | UDZS5R6(B) |
| D 902 | (B,102,33) DIODE | UDZS5R6(B) |
| L 501 | (B,127,29) CHIP SOLID INDUCTOR | QTL1013 |
| L 502 | (B,130,40) CHIP SOLID INDUCTOR | QTL1013 |
| L 503 | (A,122,62) CHIP SOLID INDUCTOR | QTL1013 |
| L 601 | (B,103,62) CHIP SOLID INDUCTOR | QTL1013 |
| L 602 | (A,98,49) CHIP SOLID INDUCTOR | QTL1013 |
| L 605 | (A,117,43) CHIP SOLID INDUCTOR | QTL1013 |
| L 701 | (B,66,43) CHIP SOLID INDUCTOR | QTL1013 |
| L 702 | (A,94,38) CHIP SOLID INDUCTOR | QTL1013 |
| L 801 | (A,47,38) CHIP SOLID INDUCTOR | QTL1013 |
| L 802 | (A,50,42) CHIP SOLID INDUCTOR | ATL7002 |
| L 803 | (A,58,52) CHIP SOLID INDUCTOR | ATL7002 |
| L 804 | (B,35,48) CHIP SOLID INDUCTOR | QTL1013 |
| L 871 | (B,68,56) CHIP SOLID INDUCTOR | QTL1013 |
| L 901 | (B,105,32) CHIP SOLID INDUCTOR | ATL7002 |
| L 902 | (B,100,33) CHIP SOLID INDUCTOR | ATL7002 |
| L 952 | (B,25,56) CHIP SOLID INDUCTOR | QTL1013 |
| JA 501 | (A,140,35) JACK | AKB7131 |
| X 601 | (A,106,39) CRYSTAL RESONATOR (12.288MHz) | ASS7046 |
| X 801 | (A,36,36) CRYSTAL RESONATOR (20 MHz) | VSS1171 |
| CN601 | (A,100,63) 10P CONNECTOR | VKN1414 |
| CN701 | (A,81,28) 19P SOCKET | XKP3080 |
| CN902 | (A,114,28) 13P SOCKET | XKP3077 |
| CN952 | (A,43,28) 15P SOCKET | XKP3078 |

### RESISTORS

| Mark No. | Description | Part No. |
|---|---|---|
| R 501 | (B,129,29) | RS1/16S750J |
| R 502 | (B,127,42) | RS1/16S750J |
| R 503 | (B,123,42) | RS1/16S473J |
| R 504 | (A,117,62) | RS1/16S473J |
| R 505 | (A,115,62) | RS1/16S0R0J |
| R 506 | (B,123,38) | RS1/16S222J |
| R 507 | (A,118,62) | RS1/16S222J |
| R 508 | (B,121,42) | RS1/16S101J |
| R 509 | (B,117,62) | RS1/16S101J |
| R 512 | (B,121,62) | RS1/16S101J |
| R 513 | (B,123,62) | RS1/16S101J |
| R 551 | (B,63,60) | RS1/16S104J |
| R 552 | (B,65,60) | RS1/16S104J |
| R 553 | (B,67,60) | RS1/16S104J |
| R 554 | (B,69,60) | RS1/16S104J |
| R 555 | (B,71,60) | RS1/16S104J |
| R 556 | (B,75,60) | RS1/16S104J |
| R 557 | (B,77,60) | RS1/16S104J |
| R 558 | (B,79,60) | RS1/16S104J |
| R 559 | (B,81,62) | RS1/16S104J |
| R 560 | (B,83,62) | RS1/16S104J |
| R 561 | (B,85,62) | RS1/16S104J |
| R 572 | (A,90,54) | RS1/16S0R0J |
| R 573 | (B,90,54) | RS1/16S0R0J |
| R 574 | (B,76,56) | RS1/16S0R0J |
| R 575 | (B,74,56) | RS1/16S0R0J |
| R 577 | (B,93,61) | RS1/16S104J |
| R 579 | (A,96,58) | RS1/16S0R0J |
| R 601 | (A,110,57) | RS1/16S0R0J |
| R 602 | (A,109,57) | RS1/16S0R0J |
| R 603 | (A,107,57) | RS1/16S0R0J |
| R 604 | (B,111,63) | RS1/16S104J |
| R 605 | (B,109,63) | RS1/16S104J |
| R 606 | (B,107,63) | RS1/16S104J |
| R 607 | (A,106,57) | RS1/16S0R0J |
| R 609 | (A,99,57) | RS1/16S0R0J |
| R 610 | (B,101,62) | RS1/16S0R0J |
| R 612 | (A,96,47) | RS1/16S0R0J |
| R 613 | (A,99,52) | RS1/16S101J |
| R 614 | (A,97,58) | RS1/16S101J |
| R 615 | (A,99,47) | RS1/16S470J |

| Mark No. | Description | Part No. |
|---|---|---|
| R 616 (A,99,46) | | RS1/16S101J |
| R 617 (A,99,44) | | RS1/16S101J |
| R 618 (A,99,43) | | RS1/16S101J |
| R 620 (A,99,41) | | RS1/16S470J |
| R 622 (A,111,42) | | RS1/16S0R0J |
| R 623 (A,114,42) | | RS1/16S0R0J |
| R 624 (A,114,43) | | RS1/16S101J |
| R 625 (A,114,44) | | RS1/16S101J |
| R 626 (A,114,46) | | RS1/16S101J |
| R 627 (A,113,40) | | RS1/16S103J |
| R 628 (A,115,51) | | RS1/16S1802F |
| R 629 (A,115,53) | | RS1/16S0R0J |
| R 630 (A,115,57) | | RS1/16S0R0J |
| R 701 (B,76,49) | | RS1/16S470J |
| R 702 (B,72,49) | | RS1/16S101J |
| R 703 (B,62,40) | | RS1/16S0R0J |
| R 704 (B,68,41) | | RS1/16S4R7J |
| R 705 (A,58,32) | | RS1/16S101J |
| R 706 (A,61,32) | | RS1/16S101J |
| R 707 (A,63,32) | | RS1/16S101J |
| R 708 (A,66,32) | | RS1/16S101J |
| R 709 (A,68,32) | | RS1/16S101J |
| R 710 (A,71,32) | | RS1/16S101J |
| R 711 (A,73,32) | | RS1/16S101J |
| R 712 (A,76,32) | | RS1/16S101J |
| R 713 (A,84,44) | | RS1/16S470J |
| R 714 (A,84,49) | | RS1/16S101J |
| R 715 (A,85,50) | | RS1/16S101J |
| R 716 (A,82,51) | | RS1/16S101J |
| R 801 (A,54,63) | | RS1/16S470J |
| R 802 (A,45,64) | | RAB4C101J |
| R 803 (B,50,62) | | RS1/16S103J |
| R 804 (B,48,62) | | RS1/16S103J |
| R 805 (B,46,62) | | RS1/16S103J |
| R 806 (B,44,62) | | RS1/16S103J |
| R 807 (B,42,56) | | RS1/16S473J |
| R 808 (B,35,56) | | RS1/16S472J |
| R 809 (B,40,56) | | RS1/16S472J |
| R 810 (A,31,52) | | RS1/16S473J |
| R 811 (B,30,51) | | RS1/16S472J |
| R 812 (B,32,51) | | RS1/16S101J |
| R 813 (A,27,49) | | RS1/16S103J |
| R 815 (A,38,40) | | RS1/16S105J |
| R 816 (A,35,40) | | RS1/16S471J |
| R 817 (A,44,42) | | RS1/16S101J |
| R 819 (B,38,49) | | RS1/16S101J |
| R 820 (B,35,43) | | RS1/16S0R0J |
| R 822 (B,42,44) | | RS1/16S103J |
| R 823 (B,43,50) | | RS1/16S473J |
| R 827 (B,51,51) | | RS1/16S470J |
| R 832 (A,53,54) | | RS1/16S470J |
| R 833 (A,57,57) | | RS1/16S470J |
| R 834 (A,57,58) | | RS1/16S470J |
| R 835 (A,57,60) | | RS1/16S470J |
| R 836 (A,57,61) | | RS1/16S470J |
| R 840 (A,23,49) | | RS1/16S101J |
| R 841 (A,63,46) | | RS1/16S473J |
| R 852 (B,53,45) | | RS1/16S222J |
| R 871 (B,58,48) | | RS1/16S470J |
| R 872 (B,60,48) | | RS1/16S470J |
| R 873 (B,60,56) | | RS1/16S470J |
| R 874 (B,58,56) | | RS1/16S470J |
| R 904 (B,113,31) | | RS1/16S104J |
| R 905 (B,111,33) | | RS1/16S104J |
| R 906 (B,107,31) | | RS1/16S104J |
| R 908 (A,121,27) | | RS1/16S0R0J |
| R 913 (A,85,30) | | RS1/16S0R0J |
| R 915 (B,89,37) | | RS1/16S102J |
| R 951 (A,26,49) | | RS1/16S101J |
| R 952 (A,25,49) | | RS1/16S101J |
| R 953 (A,22,49) | | RS1/16S101J |
| R 954 (B,22,39) | | RS1/16S331J |
| R 955 (B,20,39) | | RS1/16S331J |
| R 956 (B,18,39) | | RS1/16S331J |
| R 957 (B,16,39) | | RS1/16S331J |
| R 958 (A,17,44) | | RS1/16S331J |
| R 959 (A,18,44) | | RS1/16S331J |
| R 960 (A,19,45) | | RS1/16S331J |
| R 961 (A,21,45) | | RS1/16S331J |
| R 962 (A,20,31) | RESISTOR ARRAY | RAB4C104J |
| R 967 (A,29,32) | | RS1/16S104J |
| R 968 (A,31,32) | | RS1/16S104J |
| R 969 (A,33,32) | | RS1/16S104J |
| R 970 (A,37,32) | RESISTOR ARRAY | RAB4C104J |
| R 974 (A,42,32) | | RS1/16S0R0J |
| R 975 (A,15,52) | | RS1/16S101J |
| R 976 (A,16,52) | | RS1/16S101J |
| R 983 (B,15,32) | | RS1/16S0R0J |

## CAPACITORS

| Mark No. | Description | Part No. |
|---|---|---|
| C 503 (B,125,29) | | CKSRYB103K50 |
| C 504 (B,125,42) | | CKSRYB103K50 |
| C 505 (B,125,38) | | CCSRCH470J50 |
| C 506 (A,121,62) | | CCSRCH470J50 |
| C 511 (B,125,52) | | CCSRCH471J50 |
| C 512 (B,127,52) | | CKSRYB105K6R3 |
| C 513 (A,121,56) | | CEVW101M16 |
| C 605 (A,99,55) | | CCSRCH471J50 |
| C 606 (A,100,55) | | CKSRYB104K16 |
| C 607 (A,94,53) | | CEVW470M6R3 |
| C 608 (A,99,49) | | CCSRCH471J50 |
| C 609 (A,100,49) | | CKSRYB104K16 |
| C 612 (A,103,42) | | CCSRCH120J50 |
| C 613 (A,107,42) | | CCSRCH120J50 |
| C 614 (B,111,41) | | CKSRYB104K16 |
| C 617 (B,117,42) | | CKSRYB102K50 |
| C 618 (A,121,45) | | CEVW470M6R3 |
| C 619 (A,116,48) | | CKSRYB104K16 |
| C 620 (A,114,48) | | CCSRCH471J50 |
| C 621 (A,114,51) | | CKSRYB474K10 |
| C 701 (A,65,47) | | CKSRYB103K50 |
| C 702 (A,66,47) | | CCSRCH471J50 |
| C 703 (A,62,38) | | CEVW101M16 |
| C 704 (A,65,44) | | CKSRYB104K16 |
| C 705 (A,66,44) | | CCSRCH101J50 |
| C 706 (B,64,40) | | CKSRYB104K16 |
| C 707 (B,58,33) | | CCSRCH471J50 |
| C 708 (B,61,33) | | CCSRCH471J50 |
| C 709 (B,63,33) | | CCSRCH471J50 |
| C 710 (B,66,33) | | CCSRCH471J50 |

| Mark | No. | Description | Part No. |
|---|---|---|---|
| | C 711 | (B,68,33) | CCSRCH471J50 |
| | C 712 | (B,71,33) | CCSRCH471J50 |
| | C 713 | (B,73,33) | CCSRCH471J50 |
| | C 714 | (B,76,33) | CCSRCH471J50 |
| | C 715 | (A,88,42) | CEVW101M16 |
| | C 716 | (A,84,41) | CKSRYB104K16 |
| | C 717 | (A,83,41) | CCSRCH471J50 |
| | C 718 | (A,85,33) | CEVW470M6R3 |
| | C 720 | (A,83,38) | CKSRYB104K16 |
| | C 801 | (A,49,63) | CCSRCH471J50 |
| | C 802 | (A,49,64) | CKSRYB104K16 |
| | C 803 | (A,42,63) | CCSRCH471J50 |
| | C 804 | (A,42,64) | CKSRYB104K16 |
| | C 805 | (A,37,63) | CCSRCH471J50 |
| | C 806 | (A,37,64) | CKSRYB104K16 |
| | C 807 | (A,32,58) | CCSRCH471J50 |
| | C 808 | (A,31,58) | CKSRYB104K16 |
| | C 809 | (A,32,55) | CCSRCH471J50 |
| | C 810 | (A,31,55) | CKSRYB104K16 |
| | C 814 | (A,32,47) | CCSRCH471J50 |
| | C 815 | (A,31,47) | CKSRYB104K16 |
| | C 816 | (A,32,40) | CCSRCH8R0D50 |
| | C 817 | (A,41,40) | CCSRCH8R0D50 |
| | C 818 | (A,46,34) | CCSRCH471J50 |
| | C 819 | (A,46,33) | CKSRYB104K16 |
| | C 820 | (A,46,31) | CKSRYB103K50 |
| | C 821 | (A,35,43) | CCSRCH471J50 |
| | C 822 | (A,35,42) | CKSRYB104K16 |
| | C 823 | (A,37,43) | CCSRCH471J50 |
| | C 824 | (A,37,42) | CKSRYB104K16 |
| | C 825 | (B,38,52) | CKSRYB103K50 |
| | C 826 | (A,44,44) | CCSRCH471J50 |
| | C 827 | (A,41,44) | CKSRYB104K16 |
| | C 828 | (A,53,48) | CCSRCH471J50 |
| | C 829 | (A,54,48) | CKSRYB104K16 |
| | C 830 | (A,53,52) | CCSRCH471J50 |
| | C 831 | (A,54,52) | CKSRYB104K16 |
| | C 832 | (A,53,57) | CCSRCH471J50 |
| | C 833 | (A,54,57) | CKSRYB104K16 |
| | C 834 | (A,52,28) | CEVW101M16 |
| | C 835 | (A,63,52) | CEVW101M16 |
| | C 871 | (B,66,52) | CCSRCH471J50 |
| | C 872 | (B,68,52) | CKSRYB104K16 |
| | C 907 | (B,114,38) | CKSRYB104K16 |
| | C 908 | (A,121,37) | CEVW101M16 |
| | C 909 | (A,96,34) | CEVW101M16 |
| | C 916 | (B,67,47) | CCSRCH471J50 |
| | C 917 | (B,69,47) | CKSRYB103K50 |
| | C 918 | (B,79,49) | CKSRYB104K16 |
| | C 919 | (B,80,49) | CCSRCH471J50 |
| | C 954 | (B,26,52) | CCSRCH471J50 |
| | C 955 | (B,28,52) | CKSRYB104K16 |
| | C 956 | (A,24,54) | CEVW100M16 |

## C POWER PACK ASSY (XWZ4080)

### MISCELLANEOUS

| Mark | No. | Description | Part No. |
|---|---|---|---|
| ⚠ | IC 600 | (A,132,14) POWER PACK 2CH | STK412-230C |
| ⚠ | IC 601 | (A,265,14) POWER PACK 2CH | STK412-230C |
| ⚠ | IC 602 | (A,199,14) POWER PACK 2CH | STK412-230C |
| ⚠ | IC 610 | (A,59,28) PROTECTOR(1A) | AEK7009 |
| ⚠ | IC 803 | (A,238,87) IC | TA7805S |
| ⚠ | IC 804 | (A,282,111) REGULATOR IC | TA7809S |
| ⚠ | IC 805 | (B,271,135) IC | BA178M05FP |
| | Q 501 | (B,85,42) CHIP TRANSISTOR | 2SD2704K |
| | Q 505 | (A,111,47) TRANSISTOR | 2SC2240 |
| | Q 601 | (B,93,47) CHIP TRANSISTOR | 2SD2704K |
| | Q 602 | (B,227,45) CHIP TRANSISTOR | 2SD2704K |
| | Q 605 | (A,118,40) TRANSISTOR | 2SC2240 |
| | Q 606 | (A,252,40) TRANSISTOR | 2SC2240 |
| | Q 631 | (B,153,42) CHIP TRANSISTOR | 2SD2704K |
| | Q 633 | (A,178,47) TRANSISTOR | 2SC2240 |
| | Q 651 | (B,161,45) CHIP TRANSISTOR | 2SD2704K |
| | Q 652 | (B,219,42) CHIP TRANSISTOR | 2SD2704K |
| | Q 655 | (A,186,40) TRANSISTOR | 2SC2240 |
| | Q 656 | (A,244,47) TRANSISTOR | 2SC2240 |
| | Q 696 | (B,284,22) TRANSISTOR | 2SC4081 |
| | Q 697 | (B,282,26) TRANSISTOR | 2SC4081 |
| | Q 698 | (B,246,67) TRANSISTOR | RT1N241M |
| ⚠ | Q 701 | (A,110,75) TRANSISTOR | 2SC5511 |
| ⚠ | Q 702 | (A,96,86) TRANSISTOR | 2SA2005 |
| | Q 703 | (A,155,76) TRANSISTOR | 2SA1145 |
| | Q 704 | (A,166,79) TRANSISTOR | 2SC2240 |
| | Q 705 | (B,245,74) CHIP TRANSISTOR | RN4903 |
| | Q 707 | (B,241,74) CHIP TRANSISTOR | RN4903 |
| | Q 801 | (B,277,141) DIGITAL TR(SC-70) | RT1P241M |
| | Q 802 | (B,274,145) TRANSISTOR | RT1N241M |
| | Q 803 | (B,265,140) DIGITAL TR(SC-70) | RT1P241M |
| | Q 804 | (B,268,145) TRANSISTOR | RT1N241M |
| | Q 805 | (B,277,146) DIGITAL TR(SC-70) | RT1P241M |
| | Q 806 | (B,271,145) TRANSISTOR | RT1N241M |
| | Q 807 | (B,276,53) CHIP TR(2*PNP) | RN2903 |
| | Q 808 | (B,283,56) CHIP TRANSISTOR | RN1903 |
| | Q 809 | (A,266,101) TRANSISTOR | 2SD1858X |
| | D 601 | (A,125,57) DIODE | 1SS133 |
| | D 602 | (A,267,17) ZENER DIODE | MTZJ15A |
| | D 603 | (A,119,57) DIODE | 1SS133 |
| | D 604 | (A,261,21) ZENER DIODE | MTZJ15A |
| | D 606 | (A,259,57) DIODE | 1SS133 |
| | D 608 | (A,253,52) DIODE | 1SS133 |
| | D 631 | (A,192,61) DIODE | 1SS133 |
| | D 632 | (A,176,52) DIODE | 1SS133 |
| | D 647 | (A,200,17) ZENER DIODE | MTZJ15A |
| | D 648 | (A,196,21) ZENER DIODE | MTZJ15A |
| | D 651 | (A,192,57) DIODE | 1SS133 |
| | D 652 | (A,262,57) DIODE | 1SS133 |
| | D 653 | (A,186,52) DIODE | 1SS133 |
| | D 654 | (A,242,52) DIODE | 1SS133 |
| | D 681 | (A,132,17) ZENER DIODE | MTZJ15A |
| | D 682 | (A,129,22) ZENER DIODE | MTZJ15A |
| ⚠ | D 701 | (A,9,88) DIODE | D5SBA20(B) |
| ⚠ | D 702 | (A,9,126) DIODE | D5SBA20(B) |
| | D 703 | (B,252,76) DIODE | 1SS355 |
| | D 711 | (A,196,103) ZENER DIODE | MTZJ22D |
| | D 712 | (A,192,103) DIODE | MTZJ6R8(B) |
| | D 713 | (A,120,78) DIODE | 1SS133 |
| | D 752 | (B,170,135) DIODE | 1SS355 |
| | D 754 | (B,141,132) DIODE | 1SS355 |
| | D 758 | (B,73,136) DIODE | 1SS355 |

| Mark | No. | | Description | Part No. |
|---|---|---|---|---|
| | D | 777 | (A,127,57) DIODE | 1SS133 |
| | D | 778 | (A,108,57) DIODE | 1SS133 |
| ⚠ | D | 801 | (B,221,113) BRIDGE DIODE | S1WB(A)60SD |
| | D | 805 | (A,276,131) DIODE | 1SS133 |
| | D | 806 | (A,287,62) DIODE | MTZJ6R2(B) |
| | D | 807 | (A,284,67) DIODE | 1SS133 |
| | D | 827 | (A,262,133) DIODE | MTZJ6R2(B) |
| | D | 828 | (A,239,98) DIODE | MTZJ6R2(B) |
| ⚠ | D | 829 | (A,239,128) DIODE | D3SBA20(B) |
| | L | 501 | (A,97,118) COIL | ATH1004 |
| | L | 751 | (A,160,108) COIL | ATH1004 |
| | L | 752 | (A,173,108) COIL | ATH1004 |
| | L | 753 | (A,120,107) COIL | ATH1004 |
| | L | 761 | (A,130,108) COIL | ATH1004 |
| | L | 762 | (A,142,108) COIL | ATH1004 |
| | J | 43 | JUMPER WIRE 11P | D20PYY1120E |
| | KN601 | | (A,65,23) WRAPPING TERMINAL | VNF1084 |
| | RY501 | | (A,75,132) RELAY | XSR3012 |
| | RY751 | | (A,173,130) RELAY | XSR3012 |
| | RY752 | | (A,141,126) RELAY | XSR3012 |
| | RY753 | | (A,117,120) RELAY | XSR3012 |
| | CN701 | | (A,212,134) 11PJUMPER CONNECTOR | 52147-1110 |
| | CN702 | | (A,201,106) 6P JUMPER CONNECTOR | 52147-0610 |
| | CN705 | | (A,295,40) 21P PLUG | XKM3011 |
| | CN751 | | SP TERMINAL 8-P(V0) | XKE3053 |
| | CN753 | | SP TERMINAL 4-P(V0) | XKE3054 |
| | CN805 | | (A,317,153) 13P PLUG | XKP3066 |
| | CN806 | | 19P PLUG | XKP3069 |
| | CN807 | | (A,317,82) 15P PLUG | XKP3067 |
| | CN815 | | (A,295,79) 19P PLUG | XKM3005 |
| | CN816 | | (A,295,126) 21P PLUG | XKM3011 |
| | CN817 | | (A,308,38) CONNECTOR | CKS3382 |
| | 810 | | (A,277,90) 11P CABLE HOLDER | 51048-1100 |

## RESISTORS

| Mark | No. | | Description | Part No. |
|---|---|---|---|---|
| | R | 601 | (A,96,56) | RD1/4PU222J |
| | R | 602 | (A,230,52) | RD1/4PU222J |
| | R | 603 | (B,93,52) | RS1/16S103J |
| | R | 604 | (B,226,49) | RS1/16S103J |
| | R | 609 | (A,91,35) | RD1/4PU273J |
| | R | 610 | (A,225,35) | RD1/4PU273J |
| | R | 611 | (A,90,28) | RD1/4PU821J |
| | R | 612 | (A,223,28) | RD1/4PU821J |
| | R | 613 | (A,114,21) | RD1/4PU273J |
| | R | 614 | (A,247,21) | RD1/4PU273J |
| | R | 615 | (A,123,36) | RD1/4PU331J |
| | R | 616 | (A,270,29) | RD1/4PU562J |
| ⚠ | R | 617 | (A,114,31) RESISTOR (0.22, 5W) | ACN7094 |
| | R | 618 | (A,266,28) | RD1/4PU562J |
| | R | 619 | (A,122,52) | RD1/4PU182J |
| | R | 620 | (A,257,36) | RD1/4PU331J |
| | R | 621 | (A,124,49) | RD1/4PU821J |
| ⚠ | R | 622 | (A,248,31) RESISTOR (0.22, 5W) | ACN7094 |
| | R | 623 | (A,116,48) | RD1/4PU223J |
| | R | 624 | (A,257,52) | RD1/4PU182J |
| | R | 626 | (A,258,49) | RD1/4PU821J |
| | R | 628 | (A,250,48) | RD1/4PU223J |
| | R | 630 | (A,230,21) | RD1/4PU333J |
| | R | 631 | (A,148,46) | RD1/4PU222J |
| | R | 632 | (B,152,47) | RS1/16S103J |
| | R | 635 | (A,153,29) | RD1/4PU273J |
| | R | 636 | (A,149,25) | RD1/4PU821J |
| | R | 637 | (A,172,21) | RD1/4PU273J |
| | R | 638 | (A,174,36) | RD1/4PU331J |
| ⚠ | R | 639 | (A,173,31) RESISTOR (0.22, 5W) | ACN7094 |
| | R | 640 | (A,179,57) | RD1/4PU182J |
| | R | 641 | (A,174,52) | RD1/4PU821J |
| | R | 642 | (A,169,39) | RD1/4PU223J |
| | R | 647 | (A,202,27) | RD1/4PU562J |
| | R | 648 | (A,199,27) | RD1/4PU562J |
| | R | 651 | (A,164,56) | RD1/4PU222J |
| | R | 652 | (A,215,41) | RD1/4PU222J |
| | R | 653 | (B,160,50) | RS1/16S103J |
| | R | 654 | (B,219,46) | RS1/16S103J |
| | R | 659 | (A,159,35) | RD1/4PU273J |
| | R | 660 | (A,220,29) | RD1/4PU273J |
| | R | 661 | (A,156,28) | RD1/4PU821J |
| | R | 662 | (A,216,20) | RD1/4PU821J |
| | R | 663 | (A,181,21) | RD1/4PU273J |
| | R | 664 | (A,238,21) | RD1/4PU273J |
| | R | 665 | (A,190,36) | RD1/4PU331J |
| | R | 666 | (A,240,35) | RD1/4PU331J |
| ⚠ | R | 667 | (A,182,31) RESISTOR (0.22, 5W) | ACN7094 |
| ⚠ | R | 668 | (A,239,31) RESISTOR (0.22, 5W) | ACN7094 |
| | R | 669 | (A,189,52) | RD1/4PU182J |
| | R | 670 | (A,245,52) | RD1/4PU182J |
| | R | 671 | (A,192,49) | RD1/4PU821J |
| | R | 672 | (A,240,57) | RD1/4PU821J |
| | R | 673 | (A,184,48) | RD1/4PU223J |
| | R | 674 | (A,236,38) | RD1/4PU223J |
| | R | 680 | (B,297,21) | RS1/16S0R0J |
| | R | 688 | (A,135,27) | RD1/4PU562J |
| | R | 689 | (A,133,27) | RD1/4PU562J |
| | R | 695 | (A,97,22) | RD1/4PU333J |
| | R | 696 | (B,281,38) | RS1/16S103J |
| | R | 697 | (B,255,68) | RS1/16S103J |
| | R | 698 | (B,243,67) | RS1/16S333J |
| | R | 699 | (A,165,21) | RD1/4PU333J |
| | R | 701 | (A,117,78) | RD1/4PU562J |
| | R | 702 | (A,101,84) | RD1/4PU562J |
| | R | 703 | (A,151,72) | RD1/4PU203J |
| | R | 704 | (A,147,76) | RD1/4PU203J |
| | R | 705 | (A,283,85) | RD1/4PU473J |
| | R | 706 | (A,283,75) | RD1/4PU473J |
| | R | 707 | (A,135,77) | RD1/4PU184J |
| | R | 708 | (A,147,81) | RD1/4PU184J |
| ⚠ | R | 709 | (A,104,72) METAL OXIDE RESISTOR | RS1LMF472J |
| ⚠ | R | 710 | (A,89,93) METAL OXIDE RESISTOR | RS1LMF472J |
| ⚠ | R | 711 | (A,181,86) METAL OXIDE RESISTOR | RS2LMF242J |
| | R | 713 | (A,117,81) | RD1/4PU102J |
| | R | 714 | (B,252,68) | RS1/16S102J |
| | R | 715 | (B,250,75) | RS1/16S103J |
| | R | 716 | (B,247,75) | RS1/16S103J |
| | R | 725 | (A,276,74) | RD1/4PU103J |
| | R | 726 | (B,291,59) | RS1/16S103J |
| | R | 727 | (B,287,59) | RS1/16S103J |
| ⚠ | R | 751 | (A,158,119) CARBON FILM RESISTOR | RD1/4PUF101J |
| ⚠ | R | 752 | (A,185,120) CARBON FILM RESISTOR | RD1/4PUF101J |
| ⚠ | R | 753 | (A,156,126) METAL OXIDE RESISTOR | RS1LMF4R7J |
| ⚠ | R | 754 | (A,181,126) METAL OXIDE RESISTOR | RS1LMF4R7J |

| Mark | No. | Description | Part No. |
|---|---|---|---|
| ⚠ | R 755 | (A,103,117) CARBON FILM RESISTOR | RD1/4PUF101J |
| ⚠ | R 756 | (A,101,120) METAL OXIDE RESISTOR | RS1LMF4R7J |
| ⚠ | R 761 | (A,125,117) CARBON FILM RESISTOR | RD1/4PUF101J |
| ⚠ | R 762 | (A,155,119) CARBON FILM RESISTOR | RD1/4PUF101J |
| ⚠ | R 763 | (A,124,132) METAL OXIDE RESISTOR | RS1LMF4R7J |
| ⚠ | R 764 | (A,149,139) METAL OXIDE RESISTOR | RS1LMF4R7J |
| | R 777 | (A,81,41) | RD1/4PU222J |
| | R 778 | (B,84,48) | RS1/16S103J |
| | R 781 | (A,87,30) | RD1/4PU273J |
| | R 782 | (A,84,22) | RD1/4PU821J |
| | R 783 | (A,104,21) | RD1/4PU273J |
| | R 784 | (A,111,35) | RD1/4PU331J |
| ⚠ | R 785 | (A,105,31) RESISTOR (0.22, 5W) | ACN7094 |
| | R 786 | (A,111,57) | RD1/4PU182J |
| | R 787 | (A,106,57) | RD1/4PU821J |
| | R 788 | (A,102,38) | RD1/4PU223J |
| ⚠ | R 789 | (A,82,127) CARBON FILM RESISTOR | RD1/4PUF101J |
| ⚠ | R 790 | (A,80,145) METAL OXIDE RESISTOR | RS1LMF4R7J |
| | R 806 | (B,283,48) | RS1/16S103J |
| | R 807 | (B,278,48) | RS1/16S103J |
| | R 808 | (B,283,52) | RS1/16S102J |
| | R 809 | (B,261,105) | RS1/16S122J |
| | R 810 | (B,264,105) | RS1/16S271J |
| | R 885 | (B,310,57) | RS1/16S221J |
| | R 886 | (B,310,61) | RS1/16S221J |
| | R 887 | (B,310,65) | RS1/16S221J |
| | R 888 | (B,315,22) | RS1/16S221J |
| | R 1101 | (B,273,68) | RS1/16S0R0J |
| | R 1102 | (B,274,61) | RS1/16S0R0J |
| | R 1103 | (B,70,136) | RS1/16S0R0J |
| | R 1104 | (B,138,132) | RS1/16S0R0J |
| | R 1105 | (B,168,135) | RS1/16S0R0J |
| | R 1106 | (B,146,53) | RS1/16S0R0J |
| | R 1107 | (B,211,58) | RS1/16S0R0J |
| | R 1108 | (B,233,58) | RS1/16S0R0J |
| | R 1109 | (B,285,56) | RS1/16S0R0J |
| | R 1110 | (B,241,68) | RS1/16S0R0J |

## CAPACITORS

| | | | |
|---|---|---|---|
| | C 517 | (A,82,154) FILM CAPACITOR | CQMBA104J50 |
| | C 603 | (B,94,39) | CKSRYB331K50 |
| | C 604 | (B,227,38) | CKSRYB331K50 |
| | C 605 | (A,96,38) | CEAT4R7M50 |
| | C 606 | (A,230,38) | CEAT4R7M50 |
| | C 607 | (B,95,20) | CCSRCH470J50 |
| | C 608 | (B,230,17) | CCSRCH470J50 |
| | C 609 | (A,91,32) | CEAT101M16 |
| | C 610 | (A,225,32) | CEAT101M16 |
| | C 611 | (B,117,22) | CCSRCH470J50 |
| | C 612 | (B,250,24) | CCSRCH470J50 |
| | C 613 | (B,117,27) | CCSRCH470J50 |
| | C 614 | (B,250,28) | CCSRCH470J50 |
| | C 615 | (A,116,45) | CEANP2R2M50 |
| | C 616 | (A,250,45) | CEANP2R2M50 |
| | C 630 | (A,172,44) | CEANP2R2M50 |
| | C 632 | (B,151,33) | CKSRYB331K50 |
| | C 633 | (A,148,33) | CEAT4R7M50 |
| | C 634 | (B,155,17) | CCSRCH470J50 |
| | C 635 | (A,153,25) | CEAT101M16 |
| | C 636 | (B,175,28) | CCSRCH470J50 |
| | C 637 | (B,175,24) | CCSRCH470J50 |
| | C 653 | (B,161,38) | CKSRYB331K50 |
| | C 654 | (B,217,33) | CKSRYB331K50 |
| | C 655 | (A,164,38) | CEAT4R7M50 |
| | C 656 | (A,215,33) | CEAT4R7M50 |
| | C 657 | (B,165,17) | CCSRCH470J50 |
| | C 658 | (B,221,17) | CCSRCH470J50 |
| | C 659 | (A,158,31) | CEAT101M16 |
| | C 660 | (A,219,25) | CEAT101M16 |
| | C 661 | (B,184,23) | CCSRCH470J50 |
| | C 662 | (B,241,27) | CCSRCH470J50 |
| | C 663 | (B,184,27) | CCSRCH470J50 |
| | C 664 | (B,241,24) | CCSRCH470J50 |
| | C 665 | (A,184,45) | CEANP2R2M50 |
| | C 666 | (A,239,49) | CEANP2R2M50 |
| | C 696 | (B,281,35) | CKSRYB102K50 |
| | C 697 | (A,286,34) | CEAT221M6R3 |
| | C 701 | (A,49,80) ELECT.CAPACITOR | XCH3026 |
| | C 702 | (A,49,107) ELECT.CAPACITOR | XCH3026 |
| | C 703 | (A,43,130) ELECT.CAPACITOR | XCH3012 |
| | C 704 | (A,38,150) ELECT.CAPACITOR | XCH3012 |
| | C 705 | (A,156,81) ELECT. CAPACITOR | CEAT100M2A |
| | C 706 | (A,143,84) ELECT. CAPACITOR | CEAT100M2A |
| | C 707 | (A,17,99) MYLAR FILM CAPACITOR | CQMA103K2E |
| | C 708 | (A,16,137) MYLAR FILM CAPACITOR | CQMA103K2E |
| | C 709 | (A,257,73) | CEAT1R0M50 |
| | C 711 | (A,195,99) ELECT. CAPACITOR | CEAT101M35 |
| | C 712 | (A,189,105) | CEAT101M10 |
| | C 751 | (A,159,143) FILM CAPACITOR | CQMBA104J50 |
| | C 752 | (A,181,150) FILM CAPACITOR | CQMBA104J50 |
| | C 755 | (A,103,147) FILM CAPACITOR | CQMBA104J50 |
| | C 761 | (A,122,139) FILM CAPACITOR | CQMBA104J50 |
| | C 762 | (A,152,145) FILM CAPACITOR | CQMBA104J50 |
| | C 778 | (B,84,34) | CKSRYB331K50 |
| | C 779 | (A,81,33) | CEAT4R7M50 |
| | C 780 | (B,88,18) | CCSRCH470J50 |
| | C 781 | (A,87,27) | CEAT101M16 |
| | C 782 | (B,107,27) | CCSRCH470J50 |
| | C 783 | (B,107,24) | CCSRCH470J50 |
| | C 784 | (A,105,49) | CEANP2R2M50 |
| | C 801 | (A,248,114) ELECT. CAPACITOR | CEAT222M25 |
| | C 802 | (A,249,100) ELECT. CAPACITOR | CEAT222M25 |
| | C 806 | (A,288,55) | CEAT1R0M50 |
| | C 807 | (B,226,95) | CKSRYB103K25 |
| | C 808 | (A,245,142) ELECT. CAPACITOR | CEAT472M16 |
| | C 809 | (A,234,95) | CEAT101M10 |
| | C 810 | (A,266,133) | CEAT101M10 |
| | C 811 | (B,279,128) | CKSRYB103K25 |
| | C 812 | (B,278,109) | CKSRYB103K25 |
| | C 813 | (A,276,118) | CEAT101M16 |

# C POWER PACK ASSY (XWZ4117)

## MISCELLANEOUS

| | | | |
|---|---|---|---|
| ⚠ | IC 600 | (A,132,14) POWER PACK 2CH | STK412-230C |
| ⚠ | IC 601 | (A,265,14) POWER PACK 2CH | STK412-230C |
| ⚠ | IC 602 | (A,199,14) POWER PACK 2CH | STK412-230C |
| ⚠ | IC 610 | (A,59,28) PROTECTOR(1A) | AEK7009 |
| ⚠ | IC 701 | (A,100,75) IC PROTECTOR | ICP-N10 |

| Mark | No. | Description | Part No. |
|---|---|---|---|
| ⚠ | IC 702 | (A,84,81) IC PROTECTOR | ICP-N10 |
| ⚠ | IC 803 | (A,238,87) IC | TA7805S |
| ⚠ | IC 804 | (A,282,111) REGULATOR IC | TA7809S |
| ⚠ | IC 805 | (B,271,135) IC | BA178M05FP |
| | Q 501 | (B,85,42) CHIP TRANSISTOR | 2SD2704K |
| | Q 505 | (A,111,47) TRANSISTOR | 2SC2240 |
| | Q 601 | (B,93,47) CHIP TRANSISTOR | 2SD2704K |
| | Q 602 | (B,227,45) CHIP TRANSISTOR | 2SD2704K |
| | Q 605 | (A,118,40) TRANSISTOR | 2SC2240 |
| | Q 606 | (A,252,40) TRANSISTOR | 2SC2240 |
| | Q 631 | (B,153,42) CHIP TRANSISTOR | 2SD2704K |
| | Q 633 | (A,178,47) TRANSISTOR | 2SC2240 |
| | Q 651 | (B,161,45) CHIP TRANSISTOR | 2SD2704K |
| | Q 652 | (B,219,42) CHIP TRANSISTOR | 2SD2704K |
| | Q 655 | (A,186,40) TRANSISTOR | 2SC2240 |
| | Q 656 | (A,244,47) TRANSISTOR | 2SC2240 |
| | Q 696 | (B,284,22) TRANSISTOR | 2SC4081 |
| | Q 697 | (B,282,26) TRANSISTOR | 2SC4081 |
| | Q 698 | (B,246,67) TRANSISTOR | RT1N241M |
| ⚠ | Q 701 | (A,110,75) TRANSISTOR | 2SC5511 |
| ⚠ | Q 702 | (A,96,86) TRANSISTOR | 2SA2005 |
| | Q 703 | (A,155,76) TRANSISTOR | 2SA1145 |
| | Q 704 | (A,166,79) TRANSISTOR | 2SC2240 |
| | Q 705 | (B,245,74) CHIP TRANSISTOR | RN4903 |
| | Q 707 | (B,241,74) CHIP TRANSISTOR | RN4903 |
| | Q 801 | (B,277,141) DIGITAL TR(SC-70) | RT1P241M |
| | Q 802 | (B,274,145) TRANSISTOR | RT1N241M |
| | Q 803 | (B,265,140) DIGITAL TR(SC-70) | RT1P241M |
| | Q 804 | (B,268,145) TRANSISTOR | RT1N241M |
| | Q 805 | (B,277,146) DIGITAL TR(SC-70) | RT1P241M |
| | Q 806 | (B,271,145) TRANSISTOR | RT1N241M |
| | Q 807 | (B,276,53) CHIP TR(2*PNP) | RN2903 |
| | Q 808 | (B,283,56) CHIP TRANSISTOR | RN1903 |
| | Q 809 | (A,266,101) TRANSISTOR | 2SD1858X |
| | D 601 | (A,125,57) DIODE | 1SS133 |
| | D 602 | (A,267,17) ZENER DIODE | MTZJ15A |
| | D 603 | (A,119,57) DIODE | 1SS133 |
| | D 604 | (A,261,21) ZENER DIODE | MTZJ15A |
| | D 606 | (A,259,57) DIODE | 1SS133 |
| | D 608 | (A,253,52) DIODE | 1SS133 |
| | D 631 | (A,192,61) DIODE | 1SS133 |
| | D 632 | (A,176,52) DIODE | 1SS133 |
| | D 647 | (A,200,17) ZENER DIODE | MTZJ15A |
| | D 648 | (A,196,21) ZENER DIODE | MTZJ15A |
| | D 651 | (A,192,57) DIODE | 1SS133 |
| | D 652 | (A,262,57) DIODE | 1SS133 |
| | D 653 | (A,186,52) DIODE | 1SS133 |
| | D 654 | (A,242,52) DIODE | 1SS133 |
| | D 681 | (A,132,17) ZENER DIODE | MTZJ15A |
| | D 682 | (A,129,22) ZENER DIODE | MTZJ15A |
| ⚠ | D 701 | (A,9,88) DIODE | D5SBA20(B) |
| ⚠ | D 702 | (A,9,126) DIODE | D5SBA20(B) |
| | D 703 | (B,252,76) DIODE | 1SS355 |
| | D 711 | (A,196,103) ZENER DIODE | MTZJ22D |
| | D 712 | (A,192,103) DIODE | MTZJ6R8(B) |
| | D 713 | (A,120,78) DIODE | 1SS133 |
| | D 751 | (B,168,135) DIODE | 1SS355 |
| | D 752 | (B,170,135) DIODE | 1SS355 |
| | D 753 | (B,138,132) DIODE | 1SS355 |
| | D 754 | (B,141,132) DIODE | 1SS355 |

| Mark | No. | Description | Part No. |
|---|---|---|---|
| | D 757 | (B,70,136) DIODE | 1SS355 |
| | D 758 | (B,73,136) DIODE | 1SS355 |
| | D 777 | (A,127,57) DIODE | 1SS133 |
| | D 778 | (A,108,57) DIODE | 1SS133 |
| ⚠ | D 801 | (B,221,113) BRIDGE DIODE | S1WB(A)60SD |
| | D 805 | (A,276,131) DIODE | 1SS133 |
| | D 806 | (A,287,62) DIODE | MTZJ6R2(B) |
| | D 807 | (A,284,67) DIODE | 1SS133 |
| | D 827 | (A,262,133) DIODE | MTZJ6R2(B) |
| | D 828 | (A,239,98) DIODE | MTZJ6R2(B) |
| ⚠ | D 829 | (A,239,128) DIODE | D3SBA20(B) |
| | L 501 | (A,97,118) COIL | ATH1004 |
| | L 751 | (A,160,108) COIL | ATH1004 |
| | L 752 | (A,173,108) COIL | ATH1004 |
| | L 753 | (A,120,107) COIL | ATH1004 |
| | L 761 | (A,130,108) COIL | ATH1004 |
| | L 762 | (A,142,108) COIL | ATH1004 |
| | J 43 | JUMPER WIRE 11P | D20PYY1120E |
| | KN601 | (A,65,23) WRAPPING TERMINAL | VNF1084 |
| | RY501 | (A,75,132) RELAY | XSR3012 |
| | RY751 | (A,173,130) RELAY | XSR3012 |
| | RY752 | (A,141,126) RELAY | XSR3012 |
| | RY753 | (A,117,120) RELAY | XSR3012 |
| | CN701 | (A,212,134) 11PJUMPER CONNECTOR | 52147-1110 |
| | CN702 | (A,201,106) 6P JUMPER CONNECTOR | 52147-0610 |
| | CN705 | (A,295,40) 21P PLUG | XKM3011 |
| | CN751 | SP TERMINAL 8-P(V0) | XKE3055 |
| | CN753 | SP TERMINAL 4-P(V0) | XKE3056 |
| | CN805 | (A,317,153) 13P PLUG | XKP3066 |
| | CN806 | 19P PLUG | XKP3069 |
| | CN807 | (A,317,82) 15P PLUG | XKP3067 |
| | CN815 | (A,295,79) 19P PLUG | XKM3005 |
| | CN816 | (A,295,126) 21P PLUG | XKM3011 |
| | CN817 | (A,308,38) CONNECTOR | CKS3382 |
| | 810 | (A,277,90) 11P CABLE HOLDER | 51048-1100 |

## RESISTORS

| | | | |
|---|---|---|---|
| | R 601 | (A,96,56) | RD1/4PU222J |
| | R 602 | (A,230,52) | RD1/4PU222J |
| | R 603 | (B,93,52) | RS1/16S103J |
| | R 604 | (B,226,49) | RS1/16S103J |
| | R 609 | (A,91,35) | RD1/4PU273J |
| | R 610 | (A,225,35) | RD1/4PU273J |
| | R 611 | (A,90,28) | RD1/4PU821J |
| | R 612 | (A,223,28) | RD1/4PU821J |
| | R 613 | (A,114,21) | RD1/4PU273J |
| | R 614 | (A,247,21) | RD1/4PU273J |
| | R 615 | (A,123,36) | RD1/4PU331J |
| | R 616 | (A,270,29) | RD1/4PU562J |
| ⚠ | R 617 | (A,114,31) RESISTOR (0.22, 5W) | ACN7094 |
| | R 618 | (A,266,28) | RD1/4PU562J |
| | R 619 | (A,122,52) | RD1/4PU182J |
| | R 620 | (A,257,36) | RD1/4PU331J |
| | R 621 | (A,124,49) | RD1/4PU821J |
| ⚠ | R 622 | (A,248,31) RESISTOR (0.22, 5W) | ACN7094 |
| | R 623 | (A,116,48) | RD1/4PU223J |
| | R 624 | (A,257,52) | RD1/4PU182J |
| | R 626 | (A,258,49) | RD1/4PU821J |
| | R 628 | (A,250,48) | RD1/4PU223J |
| | R 630 | (A,230,21) | RD1/4PU333J |
| | R 631 | (A,148,46) | RD1/4PU222J |

| Mark | No. | Description | Part No. |
|---|---|---|---|
| | R 632 | (B,152,47) | RS1/16S103J |
| | R 635 | (A,153,29) | RD1/4PU273J |
| | R 636 | (A,149,25) | RD1/4PU821J |
| | R 637 | (A,172,21) | RD1/4PU273J |
| | R 638 | (A,174,36) | RD1/4PU331J |
| ⚠ | R 639 | (A,173,31) RESISTOR (0.22, 5W) | ACN7094 |
| | R 640 | (A,179,57) | RD1/4PU182J |
| | R 641 | (A,174,52) | RD1/4PU821J |
| | R 642 | (A,169,39) | RD1/4PU223J |
| | R 647 | (A,202,27) | RD1/4PU562J |
| | R 648 | (A,199,27) | RD1/4PU562J |
| | R 651 | (A,164,56) | RD1/4PU222J |
| | R 652 | (A,215,41) | RD1/4PU222J |
| | R 653 | (B,160,50) | RS1/16S103J |
| | R 654 | (B,219,46) | RS1/16S103J |
| | R 659 | (A,159,35) | RD1/4PU273J |
| | R 660 | (A,220,29) | RD1/4PU273J |
| | R 661 | (A,156,28) | RD1/4PU821J |
| | R 662 | (A,216,20) | RD1/4PU821J |
| | R 663 | (A,181,21) | RD1/4PU273J |
| | R 664 | (A,238,21) | RD1/4PU273J |
| | R 665 | (A,190,36) | RD1/4PU331J |
| | R 666 | (A,240,35) | RD1/4PU331J |
| ⚠ | R 667 | (A,182,31) RESISTOR (0.22, 5W) | ACN7094 |
| ⚠ | R 668 | (A,239,31) RESISTOR (0.22, 5W) | ACN7094 |
| | R 669 | (A,189,52) | RD1/4PU182J |
| | R 670 | (A,245,52) | RD1/4PU182J |
| | R 671 | (A,192,49) | RD1/4PU821J |
| | R 672 | (A,240,57) | RD1/4PU821J |
| | R 673 | (A,184,48) | RD1/4PU223J |
| | R 674 | (A,236,38) | RD1/4PU223J |
| | R 680 | (B,297,21) | RS1/16S0R0J |
| | R 688 | (A,135,27) | RD1/4PU562J |
| | R 689 | (A,133,27) | RD1/4PU562J |
| | R 695 | (A,97,22) | RD1/4PU333J |
| | R 696 | (B,281,38) | RS1/16S103J |
| | R 697 | (B,255,68) | RS1/16S103J |
| | R 698 | (B,243,67) | RS1/16S333J |
| | R 699 | (A,165,21) | RD1/4PU333J |
| | R 701 | (A,117,78) | RD1/4PU682J |
| | R 702 | (A,101,84) | RD1/4PU682J |
| | R 703 | (A,151,72) | RD1/4PU683J |
| | R 704 | (A,147,76) | RD1/4PU683J |
| | R 705 | (A,283,85) | RD1/4PU473J |
| | R 706 | (A,283,75) | RD1/4PU473J |
| | R 707 | (A,135,77) | RD1/4PU124J |
| | R 708 | (A,147,81) | RD1/4PU124J |
| ⚠ | R 711 | (A,181,86) METAL OXIDE RESISTOR | RS2LMF222J |
| | R 713 | (A,117,81) | RD1/4PU102J |
| | R 714 | (B,252,68) | RS1/16S102J |
| | R 715 | (B,250,75) | RS1/16S103J |
| | R 716 | (B,247,75) | RS1/16S103J |
| | R 725 | (A,276,74) | RD1/4PU103J |
| | R 726 | (B,291,59) | RS1/16S103J |
| | R 727 | (B,287,59) | RS1/16S103J |
| ⚠ | R 751 | (A,158,119) CARBON FILM RESISTOR | RD1/4PUF101J |
| ⚠ | R 752 | (A,185,120) CARBON FILM RESISTOR | RD1/4PUF101J |
| ⚠ | R 753 | (A,156,126) METAL OXIDE RESISTOR | RS1LMF4R7J |
| ⚠ | R 754 | (A,181,126) METAL OXIDE RESISTOR | RS1LMF4R7J |
| ⚠ | R 755 | (A,103,117) CARBON FILM RESISTOR | RD1/4PUF101J |

| Mark | No. | Description | Part No. |
|---|---|---|---|
| ⚠ | R 756 | (A,101,120) METAL OXIDE RESISTOR | RS1LMF4R7J |
| ⚠ | R 761 | (A,125,117) CARBON FILM RESISTOR | RD1/4PUF101J |
| ⚠ | R 762 | (A,155,119) CARBON FILM RESISTOR | RD1/4PUF101J |
| ⚠ | R 763 | (A,124,132) METAL OXIDE RESISTOR | RS1LMF4R7J |
| ⚠ | R 764 | (A,149,139) METAL OXIDE RESISTOR | RS1LMF4R7J |
| | R 777 | (A,81,41) | RD1/4PU222J |
| | R 778 | (B,84,48) | RS1/16S103J |
| | R 781 | (A,87,30) | RD1/4PU273J |
| | R 782 | (A,84,22) | RD1/4PU821J |
| | R 783 | (A,104,21) | RD1/4PU273J |
| | R 784 | (A,111,35) | RD1/4PU331J |
| ⚠ | R 785 | (A,105,31) RESISTOR (0.22, 5W) | ACN7094 |
| | R 786 | (A,111,57) | RD1/4PU182J |
| | R 787 | (A,106,57) | RD1/4PU821J |
| | R 788 | (A,102,38) | RD1/4PU223J |
| | R 789 | (A,82,127) CARBON FILM RESISTOR | RD1/4PUF101J |
| ⚠ | R 790 | (A,80,145) METAL OXIDE RESISTOR | RS1LMF4R7J |
| | R 806 | (B,283,48) | RS1/16S103J |
| | R 807 | (B,278,48) | RS1/16S103J |
| | R 808 | (B,283,52) | RS1/16S102J |
| | R 809 | (B,261,105) | RS1/16S122J |
| | R 810 | (B,264,105) | RS1/16S271J |
| | R 885 | (B,310,57) | RS1/16S221J |
| | R 886 | (B,310,61) | RS1/16S221J |
| | R 887 | (B,310,65) | RS1/16S221J |
| | R 888 | (B,315,22) | RS1/16S221J |
| | R 1101 | (B,273,68) | RS1/16S0R0J |
| | R 1102 | (B,274,61) | RS1/16S0R0J |
| | R 1106 | (B,146,53) | RS1/16S0R0J |
| | R 1107 | (B,211,58) | RS1/16S0R0J |
| | R 1108 | (B,233,58) | RS1/16S0R0J |
| | R 1109 | (B,285,56) | RS1/16S0R0J |
| | R 1110 | (B,241,68) | RS1/16S0R0J |

## CAPACITORS

| | | | |
|---|---|---|---|
| | C 517 | (A,82,154) FILM CAPACITOR | CQMBA224J50 |
| | C 521 | (A,120,164) FILM CAPACITOR | CQMBA123J50 |
| | C 603 | (B,94,39) | CKSRYB331K50 |
| | C 604 | (B,227,38) | CKSRYB331K50 |
| | C 605 | (A,96,38) | CEAT4R7M50 |
| | C 606 | (A,230,38) | CEAT4R7M50 |
| | C 607 | (B,95,20) | CCSRCH470J50 |
| | C 608 | (B,230,17) | CCSRCH470J50 |
| | C 609 | (A,91,32) | CEAT101M16 |
| | C 610 | (A,225,32) | CEAT101M16 |
| | C 611 | (B,117,22) | CCSRCH470J50 |
| | C 612 | (B,250,24) | CCSRCH470J50 |
| | C 613 | (B,117,27) | CCSRCH470J50 |
| | C 614 | (B,250,28) | CCSRCH470J50 |
| | C 615 | (A,116,45) | CEANP2R2M50 |
| | C 616 | (A,250,45) | CEANP2R2M50 |
| | C 630 | (A,172,44) | CEANP2R2M50 |
| | C 632 | (B,151,33) | CKSRYB331K50 |
| | C 633 | (A,148,33) | CEAT4R7M50 |
| | C 634 | (B,155,17) | CCSRCH470J50 |
| | C 635 | (A,153,25) | CEAT101M16 |
| | C 636 | (B,175,28) | CCSRCH470J50 |
| | C 637 | (B,175,24) | CCSRCH470J50 |
| | C 653 | (B,161,38) | CKSRYB331K50 |
| | C 654 | (B,217,33) | CKSRYB331K50 |

| Mark No. | Description | Part No. |
|---|---|---|
| C 655 | (A,164,38) | CEAT4R7M50 |
| C 656 | (A,215,33) | CEAT4R7M50 |
| C 657 | (B,165,17) | CCSRCH470J50 |
| C 658 | (B,221,17) | CCSRCH470J50 |
| C 659 | (A,158,31) | CEAT101M16 |
| C 660 | (A,219,25) | CEAT101M16 |
| C 661 | (B,184,23) | CCSRCH470J50 |
| C 662 | (B,241,27) | CCSRCH470J50 |
| C 663 | (B,184,27) | CCSRCH470J50 |
| C 664 | (B,241,24) | CCSRCH470J50 |
| C 665 | (A,184,45) | CEANP2R2M50 |
| C 666 | (A,239,49) | CEANP2R2M50 |
| C 696 | (B,281,35) | CKSRYB102K50 |
| C 697 | (A,286,34) | CEAT221M6R3 |
| C 701 | (A,49,80) ELECT.CAPACITOR | XCH3026 |
| C 702 | (A,49,107) ELECT.CAPACITOR | XCH3026 |
| C 703 | (A,43,130) ELECT.CAPACITOR | XCH3012 |
| C 704 | (A,38,150) ELECT.CAPACITOR | XCH3012 |
| C 705 | (A,156,81) ELECT. CAPACITOR | CEAT100M2A |
| C 706 | (A,143,84) ELECT. CAPACITOR | CEAT100M2A |
| C 707 | (A,17,99) MYLAR FILM CAPACITOR | CQMA103K2E |
| C 708 | (A,16,137) MYLAR FILM CAPACITOR | CQMA103K2E |
| C 709 | (A,257,73) | CEAT1R0M50 |
| C 711 | (A,195,99) ELECT. CAPACITOR | CEAT101M35 |
| C 712 | (A,189,105) | CEAT101M10 |
| C 751 | (A,159,143) FILM CAPACITOR | CQMBA224J50 |
| C 752 | (A,181,150) FILM CAPACITOR | CQMBA224J50 |
| C 753 | (A,157,155) FILM CAPACITOR | CQMBA224J50 |
| C 754 | (A,181,158) FILM CAPACITOR | CQMBA224J50 |
| C 755 | (A,103,147) FILM CAPACITOR | CQMBA224J50 |
| C 756 | (A,96,151) FILM CAPACITOR | CQMBA224J50 |
| C 757 | (A,157,164) FILM CAPACITOR | CQMBA123J50 |
| C 758 | (A,177,164) FILM CAPACITOR | CQMBA123J50 |
| C 759 | (A,101,164) FILM CAPACITOR | CQMBA123J50 |
| C 761 | (A,122,139) FILM CAPACITOR | CQMBA224J50 |
| C 762 | (A,152,145) FILM CAPACITOR | CQMBA224J50 |
| C 763 | (A,122,146) FILM CAPACITOR | CQMBA224J50 |
| C 764 | (A,150,152) FILM CAPACITOR | CQMBA224J50 |
| C 766 | (A,82,164) FILM CAPACITOR | CQMBA123J50 |
| C 773 | (A,138,164) FILM CAPACITOR | CQMBA123J50 |
| C 778 | (B,84,34) | CKSRYB331K50 |
| C 779 | (A,81,33) | CEAT4R7M50 |
| C 780 | (B,88,18) | CCSRCH470J50 |
| C 781 | (A,87,27) | CEAT101M16 |
| C 782 | (B,107,27) | CCSRCH470J50 |
| C 783 | (B,107,24) | CCSRCH470J50 |
| C 784 | (A,105,49) | CEANP2R2M50 |
| C 785 | (A,89,146) FILM CAPACITOR | CQMBA224J50 |
| C 801 | (A,248,114) ELECT. CAPACITOR | CEAT222M25 |
| C 802 | (A,249,100) ELECT. CAPACITOR | CEAT222M25 |
| C 806 | (A,288,55) | CEAT1R0M50 |
| C 807 | (B,226,95) | CKSRYB103K25 |
| C 808 | (A,245,142) ELECT. CAPACITOR | CEAT472M16 |
| C 809 | (A,234,95) | CEAT101M10 |
| C 810 | (A,266,133) | CEAT101M10 |
| C 811 | (B,279,128) | CKSRYB103K25 |
| C 812 | (B,278,109) | CKSRYB103K25 |
| C 813 | (A,276,118) | CEAT101M16 |

## D TRANS2 ASSY

### MISCELLANEOUS

| Mark No. | Description | Part No. |
|---|---|---|
| ⚠ IC 853 | (A,32,204) PROTECTOR(4A) | AEK7018 |
| J 21 | JUMPER WIRE 11P | D20PYY1130E |
| CN1201 | (A,35,183) 4P JUMPER CONNECTOR | 52147-0410 |
| 851 | (A,49,207) 11P CABLE HOLDER | 51048-1100 |

## E TRANS3 ASSY

TRANS3 ASSY has no service part.

## G HEAD PHONE ASSY

### MISCELLANEOUS

| Mark No. | Description | Part No. |
|---|---|---|
| Q 1551 | (B,78,211) CHIP TRANSISTOR | 2SD2704K |
| Q 1552 | (B,102,219) CHIP TRANSISTOR | 2SD2704K |
| J 47 | JUMPER WIRE | D20PYY0640E |
| JA 1551 | (A,117,233) HEADPHONE JACK | RKB1014 |
| KN1551 | (A,69,231) WRAPPING TERMINAL | VNF1084 |
| 1551 | (A,59,220) 6P CABLE HOLDER | 51048-0600 |

### RESISTORS

| Mark No. | Description | Part No. |
|---|---|---|
| ⚠ R 1551 | (A,84,202) METAL OXIDE RESISTOR | RS2LMF331J |
| ⚠ R 1552 | (A,78,203) METAL OXIDE RESISTOR | RS2LMF331J |
| ⚠ R 1553 | (A,108,221) METAL OXIDE RESISTOR | RS1LMF151J |
| ⚠ R 1554 | (A,93,216) METAL OXIDE RESISTOR | RS1LMF151J |
| R 1555 | (B,100,216) | RS1/16S472J |
| R 1556 | (B,81,210) | RS1/16S472J |
| R 1557 | (B,87,228) | RS1/16S102J |

### CAPACITORS

| Mark No. | Description | Part No. |
|---|---|---|
| C 1551 | (B,94,226) | CKSRYB223K50 |
| C 1552 | (B,83,210) | CKSRYB223K50 |
| C 1553 | (B,110,224) | CKSRYB103K50 |
| C 1554 | (B,110,226) | CCSRCH471J50 |
| C 1555 | (B,110,229) | CKSRYB104K16 |
| C 1556 | (B,112,239) | CKSRYB103K50 |
| C 1557 | (B,109,239) | CCSRCH471J50 |
| C 1558 | (B,107,239) | CKSRYB104K16 |
| C 1561 | (A,69,205) ELECT. CAPACITOR | CEANP470M50 |
| C 1562 | (A,71,223) ELECT. CAPACITOR | CEANP470M50 |

## K FRONT DISPLAY

### MISCELLANEOUS

| Mark No. | Description | Part No. |
|---|---|---|
| IC 401 | (B,121,181) DISPLAY U-COM | PE5550A |
| IC 402 | (A,223,169) REMOTE RECEIVER UNIT | GP1UM27XK0VF |
| Q 442 | (B,238,190) TRANSISTOR | RT1N241M |
| Q 484 | (B,217,189) TRANSISTOR | 2SA1576A |
| D 401 | (B,239,163) DIODE | DAN202K |
| D 403 | (B,226,189) DIODE | 1SS355 |
| L 401 | (A,242,159) RADIAL INDUCTOR | LFCA2R2J |
| V 401 | (A,189,200) FL TUBE | XAV3033 |
| S 451 | (A,234,139) SWITCH | VSG1024 |
| S 452 | (A,213,136) SWITCH | VSG1024 |
| S 453 | (A,187,134) SWITCH | VSG1024 |
| S 454 | (A,70,134) SWITCH | VSG1024 |
| S 455 | (A,46,134) SWITCH | VSG1024 |
| S 456 | (A,23,134) SWITCH | VSG1024 |
| S 458 | (A,13,112) SWITCH | VSG1024 |
| S 459 | (A,114,136) SWITCH | VSG1024 |

| Mark No. | Description | Part No. |
|---|---|---|
| S 460 | (A,91,136) SWITCH | VSG1024 |
| S 461 | (A,57,112) SWITCH | VSG1024 |
| S 462 | (A,42,112) SWITCH | VSG1024 |
| S 463 | (A,27,112) SWITCH | VSG1024 |
| S 464 | (A,164,134) SWITCH | VSG1024 |
| S 465 | (A,140,134) SWITCH | VSG1024 |
| S 466 | (A,86,90) SWITCH | VSG1024 |
| S 467 | (A,72,90) SWITCH | VSG1024 |
| S 468 | (A,57,90) SWITCH | VSG1024 |
| S 469 | (A,42,90) SWITCH | VSG1024 |
| S 470 | (A,27,90) SWITCH | VSG1024 |
| S 471 | (A,13,90) SWITCH | VSG1024 |
| X 401 | (A,149,165) CERAMIC RESONATOR (5.00 MHz) | VSS1142 |
| CN401 | (A,246,165) 17P CONNECTOR | 52044-1745 |
| 471 | (A,35,176) CABLE HOLDER(3P) | 51063-0305 |
| 404 | (A,197,127) CABLE HOLDER(7P) | 51063-0705 |
| 402 | FL HOLDER(FE) | VNF1096 |

## RESISTORS

| | | |
|---|---|---|
| R 401 | (B,144,169) | RS1/16S105J |
| R 402 | (B,223,189) | RS1/16S104J |
| R 403 | (B,220,189) | RS1/16S104J |
| R 405 | (B,228,155) | RS1/16S102J |
| R 406 | (B,226,155) | RS1/16S103J |
| R 407 | (B,78,176) | RS1/16S473J |
| R 408 | (B,80,176) | RS1/16S473J |
| R 409 | (B,75,176) | RS1/16S473J |
| R 410 | (B,73,176) | RS1/16S473J |
| R 411 | (B,229,189) | RS1/16S473J |
| R 412 | (B,234,187) | RS1/16S221J |
| R 413 | (B,234,184) | RS1/16S221J |
| R 414 | (B,234,182) | RS1/16S221J |
| R 415 | (B,234,180) | RS1/16S221J |
| R 416 | (B,234,178) | RS1/16S221J |
| R 417 | (B,219,182) | RS1/16S101J |
| R 422 | (B,157,169) | RS1/16S104J |
| R 423 | (B,131,167) | RS1/16S104J |
| R 424 | (B,83,176) | RS1/16S104J |
| R 425 | (B,213,182) | RS1/16S104J |
| R 430 | (B,234,175) | RS1/16S0R0J |
| R 451 | (B,236,144) | RS1/16S472J |
| R 452 | (B,234,144) | RS1/16S681J |
| R 453 | (B,187,147) | RS1/16S821J |
| R 454 | (B,166,153) | RS1/16S122J |
| R 455 | (A,45,146) | RD1/4PU681J |
| R 456 | (A,35,144) | RD1/4PU821J |
| R 457 | (A,16,139) | RD1/4PU122J |
| R 459 | (A,109,134) | RD1/4PU472J |
| R 460 | (A,101,135) | RD1/4PU681J |
| R 461 | (B,52,117) | RS1/16S821J |
| R 462 | (B,49,117) | RS1/16S122J |
| R 463 | (B,34,117) | RS1/16S162J |
| R 464 | (B,20,117) | RS1/16S272J |
| R 465 | (A,161,128) | RD1/4PU472J |
| R 466 | (A,151,128) | RD1/4PU681J |
| R 467 | (A,131,128) | RD1/4PU821J |
| R 468 | (B,79,91) | RS1/16S122J |
| R 469 | (B,64,91) | RS1/16S162J |
| R 470 | (B,50,92) | RS1/16S272J |
| R 471 | (B,34,91) | RS1/16S512J |
| R 472 | (B,86,176) | RS1/16S472J |
| R 473 | (B,19,91) | RS1/16S133J |
| R 481 | (B,169,204) | RS1/16S473J |
| R 482 | (B,167,204) | RS1/16S473J |
| R 483 | (B,165,204) | RS1/16S473J |
| R 484 | (B,163,204) | RS1/16S473J |
| R 485 | (B,161,204) | RS1/16S473J |
| R 486 | (B,159,204) | RS1/16S473J |
| R 487 | (B,157,204) | RS1/16S473J |
| R 488 | (B,155,204) | RS1/16S473J |
| R 489 | (B,153,204) | RS1/16S473J |
| R 490 | (B,151,204) | RS1/16S473J |
| R 492 | (B,121,204) | RS1/16S104J |
| R 493 | (B,119,204) | RS1/16S104J |
| R 494 | (B,117,204) | RS1/16S104J |
| R 495 | (B,115,204) | RS1/16S104J |
| R 496 | (B,113,204) | RS1/16S104J |
| R 497 | (B,111,204) | RS1/16S104J |
| R 498 | (B,109,204) | RS1/16S104J |
| R 499 | (B,107,204) | RS1/16S104J |
| R 500 | (B,105,204) | RS1/16S104J |
| R 517 | (B,149,204) | RS1/16S473J |
| R 518 | (B,147,204) | RS1/16S473J |
| R 519 | (B,145,204) | RS1/16S473J |
| R 520 | (B,103,204) | RS1/16S104J |
| R 521 | (B,101,204) | RS1/16S104J |
| R 522 | (B,99,204) | RS1/16S104J |
| R 523 | (B,97,204) | RS1/16S104J |
| R 524 | (B,95,204) | RS1/16S104J |
| R 525 | (B,93,204) | RS1/16S104J |
| R 526 | (B,91,204) | RS1/16S104J |
| R 527 | (B,89,204) | RS1/16S104J |
| R 528 | (B,87,204) | RS1/16S104J |
| R 529 | (B,85,204) | RS1/16S104J |
| R 530 | (B,83,204) | RS1/16S104J |
| R 531 | (B,81,204) | RS1/16S104J |
| R 532 | (B,79,204) | RS1/16S104J |
| R 533 | (B,77,204) | RS1/16S104J |
| R 534 | (B,75,204) | RS1/16S104J |

## CAPACITORS

| | | |
|---|---|---|
| C 401 | (B,247,155) | CKSRYB103K50 |
| C 402 | (B,247,153) | CKSRYB103K50 |
| C 403 | (A,234,168) ELECTR.CAPACITOR | CEAT101M6R3 |
| C 410 | (B,49,186) | CKSRYB103K50 |
| C 411 | (B,51,186) | CKSRYB103K50 |
| C 412 | (A,42,178) | CEAT470M50 |
| C 418 | (B,141,179) | CKSRYB104K16 |
| C 419 | (B,103,182) | CKSRYB103K50 |
| C 420 | (A,39,185) ELECT. CAPACITOR | CEAT101M35 |
| C 421 | (B,160,169) | CKSRYB104K16 |
| C 441 | (B,223,176) | CKSRYB103K50 |
| C 442 | (A,239,146) | CEAL470M10 |
| C 451 | (B,125,166) | CKSRYB102K50 |
| C 452 | (B,103,164) | CKSRYB102K50 |
| C 453 | (B,122,166) | CKSRYB102K50 |
| C 454 | (B,100,164) | CKSRYB102K50 |
| C 481 | (B,140,191) | CCSRCH471J50 |
| C 482 | (B,126,201) | CCSRCH221J50 |
| C 483 | (B,126,199) | CCSRCH221J50 |

| Mark No. | Description | Part No. |
|---|---|---|
| C 487 | (B,83,163) | CKSRYB102K50 |
| C 488 | (B,79,163) | CKSRYB102K50 |
| C 489 | (B,75,163) | CKSRYB102K50 |
| C 490 | (A,241,34) | CKSRYB102K50 |

## L R.ENCODER ASSY

### MISCELLANEOUS

| | | | |
|---|---|---|---|
| S 457 | (A,300,183) | SWITCH | VSG1024 |
| S 512 | (A,288,223) | ROTARY ENCODER (JOG) | XSX3008 |
| S 513 | (A,288,152) | ROTARY ENCODER | XSX3005 |
| S 514 | (A,257,216) | SWITCH | VSG1024 |
| S 515 | (A,270,183) | SWITCH | VSG1024 |
| S 516 | (A,285,183) | SWITCH | VSG1024 |
| 511 | (A,257,172) | CABLE HOLDER(7P) | 51063-0705 |

### RESISTORS

| | | |
|---|---|---|
| R 513 | (B,270,190) | RS1/16S162J |
| R 514 | (B,280,185) | RS1/16S272J |
| R 515 | (B,295,185) | RS1/16S512J |

## M POWER KEY ASSY

### MISCELLANEOUS

| | | | |
|---|---|---|---|
| S 501 | (A,12,174) | SWITCH | VSG1024 |
| S 502 | (A,20,221) | SWITCH | VSG1024 |
| S 503 | (A,32,218) | SWITCH | VSG1024 |
| S 504 | (A,47,218) | SWITCH | VSG1024 |
| 501 | (A,47,210) | CABLE HOLDER(3P) | 51063-0305 |

### RESISTORS

| | | |
|---|---|---|
| R 502 | (B,7,171) | RS1/16S162J |
| R 503 | (A,15,228) | RD1/4PU272J |
| R 504 | (A,30,228) | RD1/4PU512J |

## O TRANS4 ASSY

### MISCELLANEOUS

| | | | |
|---|---|---|---|
| ⚠ IC 891 | (A,104,223) | PROTECTOR(800MA) | AEK7008 |
| ⚠ IC 892 | (A,77,232) | PROTECTOR(800MA) | AEK7008 |
| ⚠ D 891 | (B,91,226) | BRIDGE DIODE | S1WB(A)60SD |
| J 22 | | JUMPER WIRE | D20PYY0330E |
| 891 | (A,70,221) | 3P CABLE HOLDER | 51048-0300 |

### CAPACITORS

| | | | |
|---|---|---|---|
| C 891 | (A,97,218) | ELECT. CAPACITOR | CEAT471M35 |
| C 892 | (A,86,218) | ELECT. CAPACITOR | CEAT471M35 |

## P REGULATOR ASSY

### MISCELLANEOUS

| | | | |
|---|---|---|---|
| ⚠ IC 801 | (A,161,89) | REGULATOR IC | TA7812S |
| ⚠ IC 802 | (A,178,89) | REGULATOR IC | TA79012S |
| ⚠ IC 803 | (A,196,89) | IC | TA7805S |
| D 810 | (A,186,95) | ZENER DIODE | MTZJ6.2B |
| CN800 | (A,194,113) | 11P.JUMPER CONNECTOR | 52147-1110 |

### RESISTORS

| | | | |
|---|---|---|---|
| ⚠ R 801 | (A,152,97) | METAL OXIDE RESISTOR | RS3LMF331J |

### CAPACITORS

| | | |
|---|---|---|
| C 803 | (B,164,98) | CKSRYB103K25 |
| C 804 | (B,180,98) | CKSRYB103K25 |

| Mark No. | Description | Part No. |
|---|---|---|
| C 805 | (A,152,103) | CEJQ101M16 |
| C 806 | (A,173,100) | CEAT101M16 |
| C 818 | (B,196,95) | CKSRYB103K25 |
| C 819 | (A,190,95) | CEAT101M10 |

## R DIG. INPUT ASSY

### MISCELLANEOUS

| | | | |
|---|---|---|---|
| F 1901 | (B,214,228) | INDUCTOR | CTF1295 |
| JA 1900 | (A,206,201) | OPT. LINK IN | GP1FAV51RKBF |
| KN1902 | (A,249,206) | SCREW PLATE | VNE1948 |
| CN1903 | (A,229,230) | CONNECTOR | VKN1186 |

### RESISTORS

| | | |
|---|---|---|
| R 1900 | (B,211,215) | RS1/16S101J |

### CAPACITORS

| | | |
|---|---|---|
| C 1900 | (B,205,215) | CKSRYB104K25 |
| C 1903 | (B,211,230) | CKSRYB103K50 |
| C 1904 | (A,208,228) | CEAL101M10 |
| C 1905 | (B,233,232) | CKSRYB104K25 |
| C 1906 | (B,235,232) | CKSRYB103K50 |
| C 1907 | (B,237,232) | CCSRCH101J50 |
| C 1908 | (B,239,232) | CKSRYB102K50 |

## T FRONT INPUT ASSY

### MISCELLANEOUS

| | | | |
|---|---|---|---|
| JA 971 | (A,100,96) | JACK | DKN1124 |
| KN971 | (A,131,120) | WRAPPING TERMINAL | VNF1084 |
| CN971 | (A,143,98) | 3P CABLE HOLDER | 51048-0300 |
| J29 | (A,143,98) | 3P CABLE | D20PYY0323E |

### RESISTORS

| | | |
|---|---|---|
| R 971 | (B,130,91) | RS1/16S331J |
| R 972 | (B,130,104) | RS1/16S331J |

### CAPACITORS

| | | |
|---|---|---|
| C 971 | (B,127,91) | CCSRCH101J50 |
| C 972 | (B,127,104) | CCSRCH101J50 |
| C 973 | (B,132,91) | CCSRCH101J50 |
| C 974 | (B,132,104) | CCSRCH101J50 |
| C 975 | (B,106,104) | CCSRCH471J50 |
| C 976 | (B,108,104) | CKSRYB103K50 |
| C 977 | (B,111,104) | CKSRYB104K25 |

## U PRIMARY ASSY

### MISCELLANEOUS

| | | | |
|---|---|---|---|
| ⚠ IC 51 | (A,234,14) | REGULATOR IC | TA78057S |
| Q 51 | (B,267,14) | DIGITAL TR(SC-70) | RT1N431M |
| ⚠ D 51 | (B,298,20) | BRIDGE DIODE | DF06SA |
| D 55 | (A,304,21) | DIODE | 1SR139-400 |
| D 56 | (A,271,21) | DIODE | 1SS133 |
| D 58 | (A,314,13) | ZENER DIODE | MTZJ5.1B |
| H 51 | (A,231,34) | FUSE CLIP | AKR7001 |
| H 52 | (A,250,34) | FUSE CLIP | AKR7001 |
| J 52 | | JUMPER WIRE | D20PYY0410E |
| KN51 | (A,318,25) | WRAPPING TERMINAL | VNF1084 |
| KN3001 | (A,223,117) | SCREW PLATE | VNE1948 |
| ⚠ RY51 | (A,271,57) | RELAY | XSR3013 |
| ⚠ T 51 | (A,288,56) | STANDBY TRANSFORMER | ATT7043 |

| Mark | No. | | Description | Part No. |
|---|---|---|---|---|
| ⚠ | CN51 | (A,236,47) | AC CODE SOCKET | RKP1751 |
| | 55 | (A,317,9) | 4P CABLE HOLDER | 51048-0400 |

**RESISTORS**

| | | | | |
|---|---|---|---|---|
| ⚠ | R 51 | (A,318,37) | RESISTOR(2.2M, 1/2W) | RCN1080 |
| | R 52 | (A,275,11) | | RD1/2PM270J |
| | R 53 | (A,307,12) | | RD1/4PU332J |
| | R 54 | (A,319,16) | | RD1/4PU103J |

**CAPACITORS**

| | | | | |
|---|---|---|---|---|
| ⚠ | C 51 | (A,261,64) | FILM CAPACITOR | ACE7013 |
| ⚠ | C 52 | (A,265,57) | SAFETY CAPACITOR | XCG3009 |
| | C 53 | (A,291,21) | ELECT. CAPACITOR | CEAT102M16 |
| | C 54 | (A,300,11) | | CEAT470M25 |
| | C 55 | (A,307,21) | | CKPUYF103Z25 |
| | C 56 | (A,311,21) | | CKPUYF103Z25 |
| | C 57 | (A,314,21) | | CKPUYF103Z25 |

## V TRANS1 ASSY

TRANS1 ASSY has no service part.

## Y FM/AM TUNER UNIT

FM/AM TUNER UNIT has no service part.

# 6. ADJUSTMENT

There is no information to be shown in this chapter.

# 7. GENERAL INFORMATION

## 7.1 DIAGNOSIS

### 7.1.1 DISASSEMBLY

**Note:** Even if the unit shown in the photos and illustrations in this manual may differ from your product, the procedures described here are common.

① Remove the top cover (five screws).

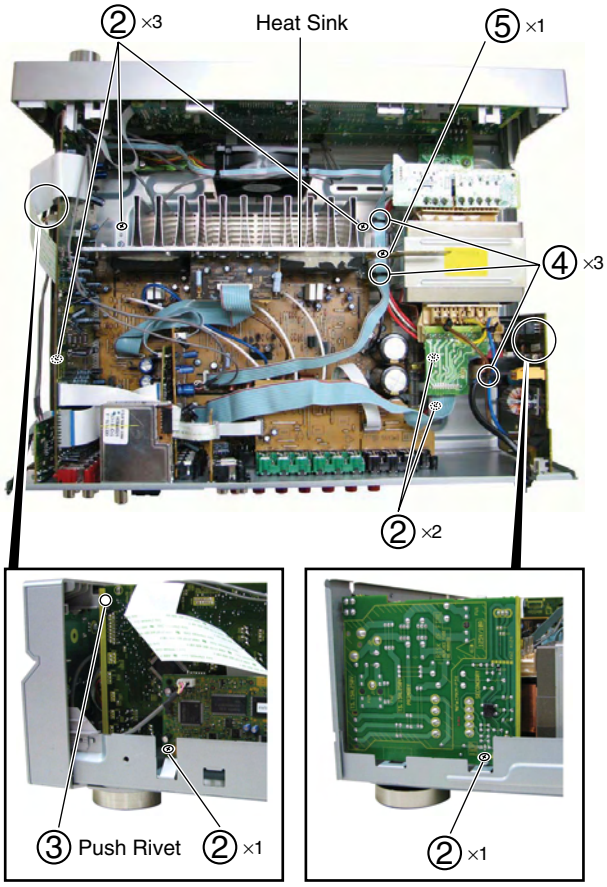


④ Cut 3 cable ties.

⑤ Remove PCB holder(one screw).

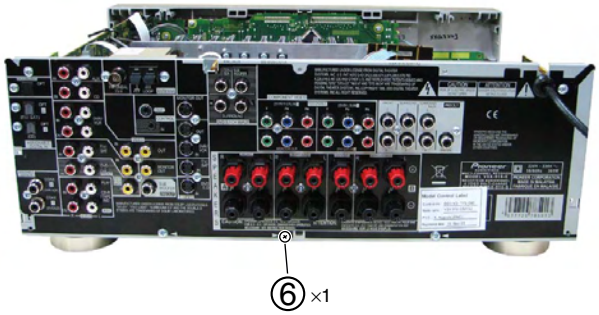


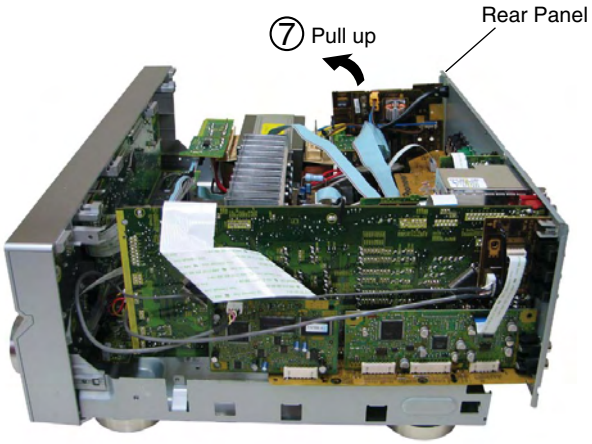


Note : The unit does not operate when the screws of Speaker Terminal are taken off from Rear Panel.

**Heat-sink caution when disassembling** : The Heat-sink becomes hot; please take care.

**Note:** Even if the unit shown in the photos and illustrations in this manual may differ from your product, the procedures described here are common.

⑧ Diagnosis

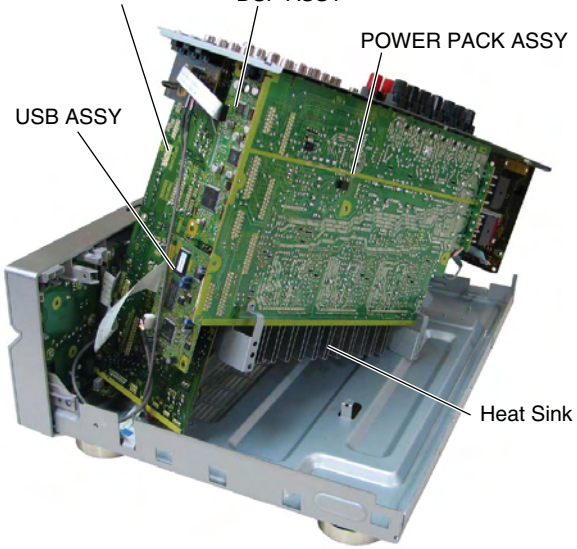


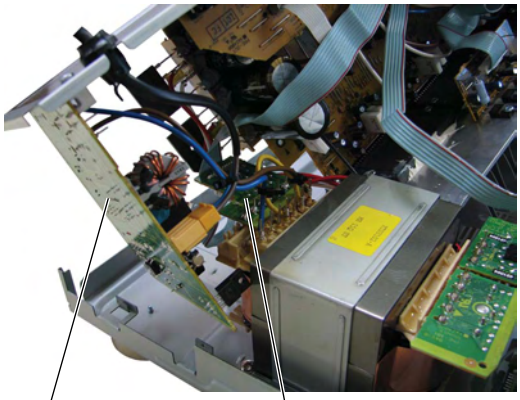

Be careful that no parts on the Primary Assy are touching the chassis.

When lifting up the Amplifier Assy, be careful not to damage this TRANS Assy.

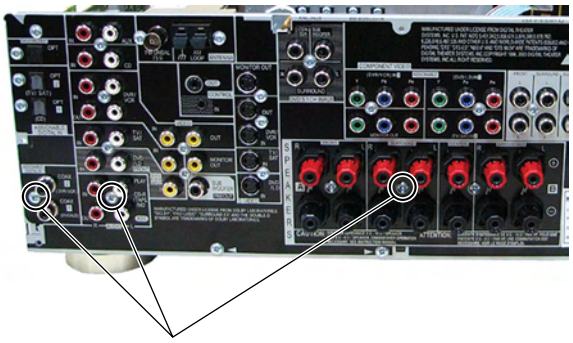

**CAUTION:**
These 3 screws in the rear panel should be tightened at all times.
They have to be connected to the chassis, otherwise the unit may not work properly.

Note : The unit does not operate when the screws of Speaker Terminal are taken off from Rear Panel.

**Heat-sink caution when disassembling** : The Heat-sink becomes hot; please take care.

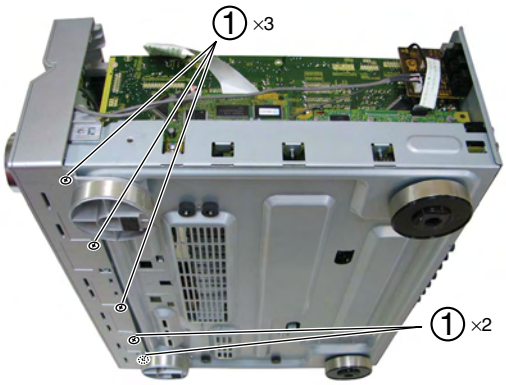


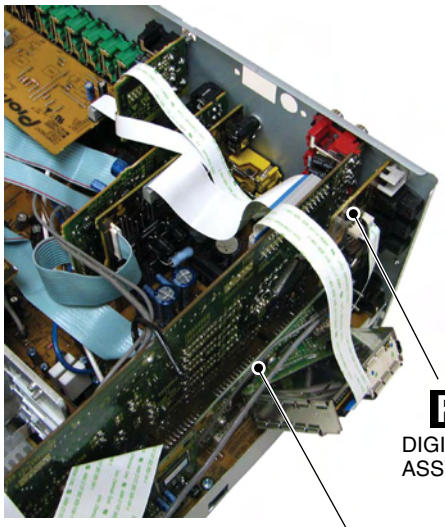


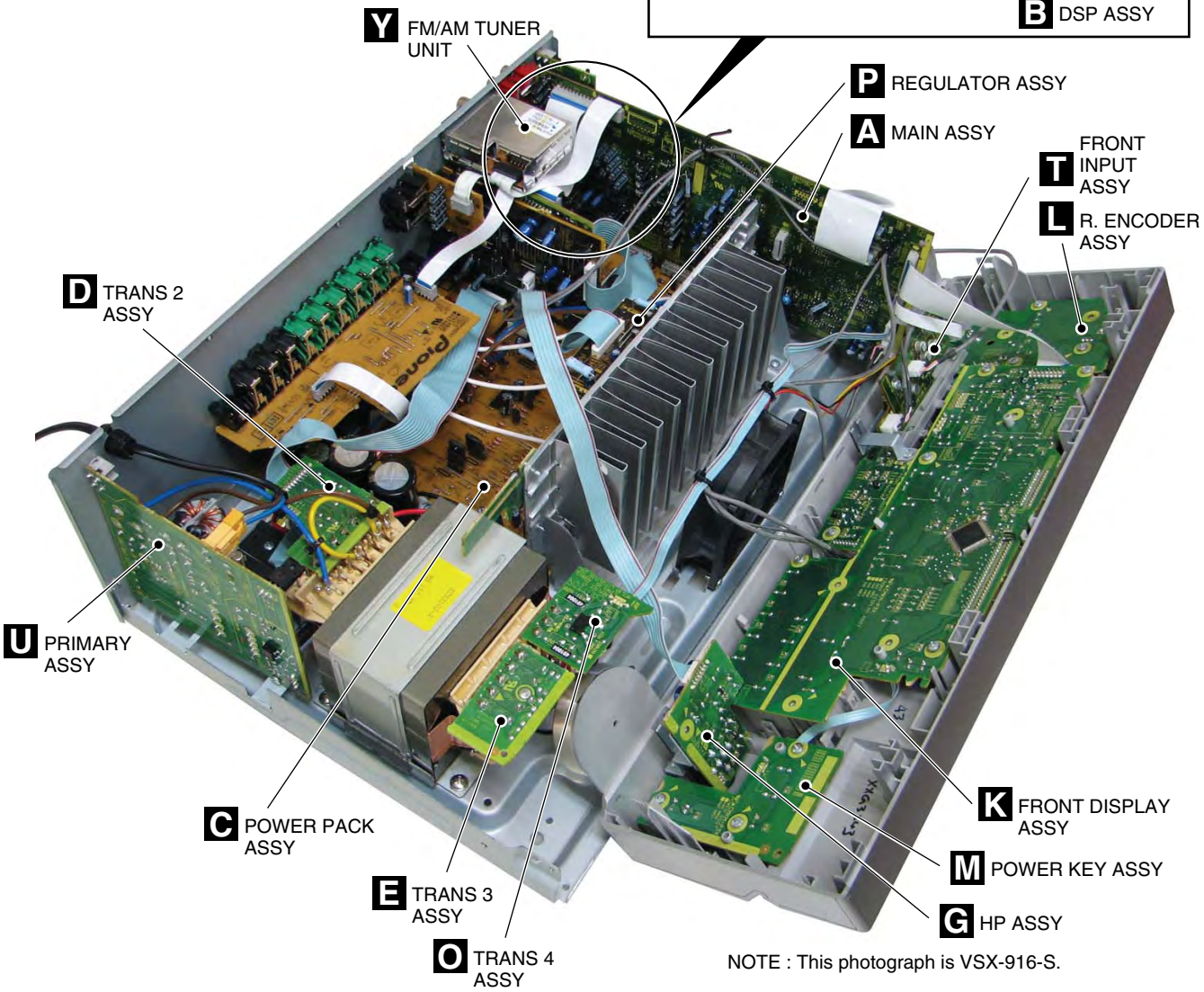


NOTE : This photograph is VSX-916-S.

# 7.2 PARTS

## 7.2.1 IC

- The information shown in the list is basic information and may not correspond exactly to that shown in the schematic diagrams.
- **List of IC**

  PEG217A, PE5550A, R2S15205FP

### ■ PEG217A (MAIN ASSY : IC9001)

- **System Control MCU**

### ■ Pin Arrangement (Top View)

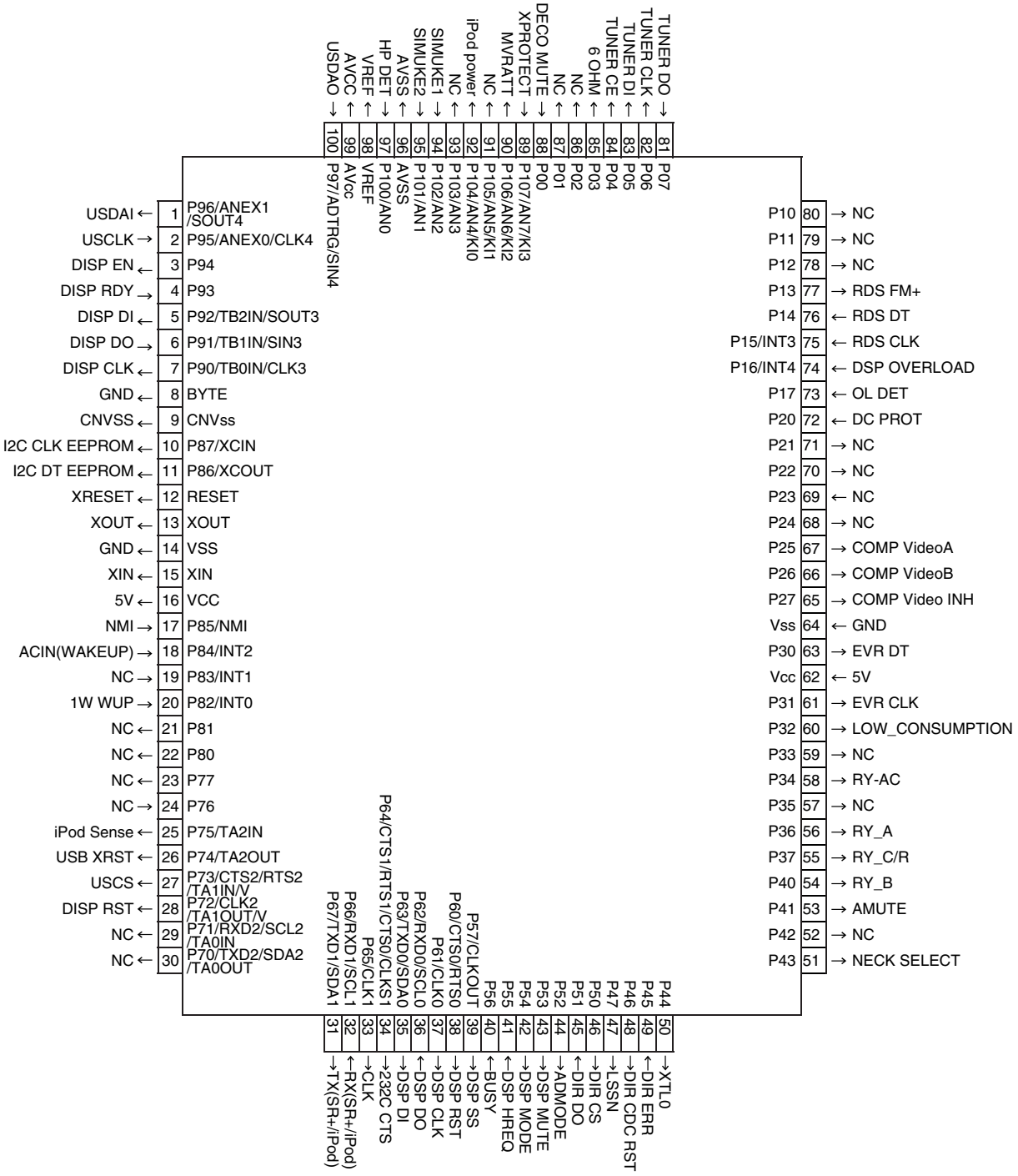

## • Pin Function

| No. | Port | Pin Name | I/O | Pin Function |
|---|---|---|---|---|
| 1 | P96/ANEX1/SOUT4 | USDAI | I/O | No use |
| 2 | P95/ANEX0/CLK4 | USCLK | I/O | No use |
| 3 | P94 | DISP EN | I/O | Enable signal to display u-com |
| 4 | P93 | DISP RDY | I/O | Ready signal from display u-com |
| 5 | P92/TB2IN/SOUT3 | DISP DI | I/O | Data out to display u-com |
| 6 | P91/TB1IN/SIN3 | DISP DO | I/O | Data in from display u-com |
| 7 | P90/TB0IN/CLK3 | DISP CLK | I/O | Clock signal to display u-com |
| 8 | BYTE | GND | | |
| 9 | CNVss | CNVSS | | |
| 10 | P87/XCIN | I2C CK | I/O | Clock for I2C communication with EEPROM IC |
| 11 | P86/XCOUT | I2C DT | I/O | Data for I2C communication with EEPROM IC |
| 12 | RESET | XRESET | | |
| 13 | XOUT | XOUT | | |
| 14 | VSS | GND | | |
| 15 | XIN | XIN | | |
| 16 | VCC | 5V | | |
| 17 | P85/NMI | NMI | I | No use |
| 18 | P84/INT2 | ACIN(WAKEUP) | I/O | AC pulse in |
| 19 | P83/INT1 | NC | I/O | Request from TCC760 to main u-com |
| 20 | P82/INT0 | 1W WUP | I/O | wake up signal from display u-com |
| 21 | P81 | NC | I/O | No use |
| 22 | P80 | NC | I/O | No use |
| 23 | P77 | NC | I/O | No use |
| 24 | P76 | NC | I/O | No use |
| 25 | P75/TA2IN | iPod Sense | I/O | No use |
| 26 | P74/TA2OUT | USB XRST | I/O | No use |
| 27 | P73/CTS2/RTS2/TA1IN/V | USCS | I/O | No use |
| 28 | P72/CLK2/TA1OUT/V | DISP RST | I/O | reset signal to display u-com |
| 29 | P71/RXD2/SCL2/TA0IN | NC | I/O | |
| 30 | P70/TXD2/SDA2/TA0OUT | NC | I/O | |
| 31 | P67/TXD1/SDA1 | TXD(SR+/iPod) | I/O | SR+/iPod communication |
| 32 | P66/RxD/SCL1 | RXD(SR+/iPod) | I/O | SR+/iPod communication |
| 33 | P65/CLK1 | CLK | I/O | It is necessary when writing for JIG |
| 34 | P64/CTS1/RTS1/CTSO0/CLKS1 | 232C CTS | I/O | For rewriting 232C (Admit communication) |
| 35 | P63/TXD0/SDA0 | DSP DI | I/O | Data output signal for communication with DSP and DIR |
| 36 | P62/RxD0/SCL0 | DSP DO | I/O | Data input signal for communication with DSP |
| 37 | P61/CLK0 | DSP CLK | I/O | Clock signal for communication with DSP and DIR |
| 38 | P60/CTS0/RTS0 | DSP RST | I/O | Reset signal for DSP |
| 39 | P57/CLKOUT | DSP SS | I/O | Strobe select signal to DSP |
| 40 | P56 | BUSY | I/O | Use it in MCACC |
| 41 | P55 | DSP HREQ | I/O | DSP error detect signal |
| 42 | P54 | DSP MODE | I/O | Mode select of DSP (ROM/RAM) |
| 43 | P53 | DSP MUTE | I/O | DSP ASSY mute |
| 44 | P52 | ADMODE | I/O | DSP ASSY |
| 45 | P51 | DIR DO | I/O | Data input signal for communication with DIR/DAC |
| 46 | P50 | DIR CS | I/O | Chip select signal for communication with DIR/DAC |
| 47 | P47 | LSSN | I/O | DSP ASSY |
| 48 | P46 | DIR CDC RST | I/O | Reset signal for DIR CODEC |
| 49 | P45 | DIR ERR | I/O | lock/unlock signal |
| 50 | P44 | XTL0 | I/O | DIR X'tal change |

## • Pin Function

| No. | Port | Pin Name | I/O | Pin Function |
|---|---|---|---|---|
| 51 | P43 | NECK_SEL | I/O | For 8ohm spk impedance: "H at Adv Surr,Standard,5.1Multich,speaker A+B(7ch model). For 6 ohm spk impedance: L |
| 52 | P42 | NC | I/O | |
| 53 | P41 | AMUTE | I/O | System mute |
| 54 | P40 | RY_B | I/O | Speaker B relay-on / OFF at 916, 816 and 516. This RY_B is used for SW relay at 316. |
| 55 | P37 | RY_C/R | I/O | Rear one / center relay-on / OFF |
| 56 | P36 | RY_A | I/O | Speaker A relay-on / OFF |
| 57 | P35 | NC | I/O | |
| 58 | P34 | RY-AC | I/O | AC relay on/off |
| 59 | P33 | VIDEO4 | I/O | NJM2296 control (VIDEO input select) (SX316 no connect) |
| 60 | P32 | LOW_CONSUMPTION | I/O | When 1 minutes passed after power off and then go into stop mode and port L, else H. |
| 61 | P31 | EVR CLK | I/O | Clock signal for Function and E-volume |
| 62 | Vcc | 5V | | |
| 63 | P30 | EVR DT | I/O | Data signal for Function and E-volume |
| 64 | Vss | GND | | |
| 65 | P27 | COMP VIDEO INH | I/O | Component terminal control |
| 66 | P26 | COMP VideoB | I/O | Component terminal control |
| 67 | P25 | COMP VideoA | I/O | Component terminal control |
| 68 | P24 | SWDET | I/O | "H": SW YES, "L": SW NO( SX316 no connect) |
| 69 | P23 | VIDEO3 | I/O | NJM2296 control (VIDEO input select) (SX316 no connect) |
| 70 | P22 | VIDEO2 | I/O | NJM2296 control (VIDEO input select) (SX316 no connect) |
| 71 | P21 | VIDEO1 | I/O | NJM2296 control (VIDEO input select) (SX316 no connect) |
| 72 | P20 | DC PROTECT | I/O | Amplifier DC detection. H:Normal, L:Abnormal |
| 73 | P17 | OL DET | I/O | Amplifier overload detection. H:Normal, L:Abnormal |
| 74 | P16/INT4 | DSP OL | I/O | ANALOG OVER LOAD detect (H : detect) |
| 75 | P15/INT3 | RDS CLK | I/O | RDS clock in signal |
| 76 | P14 | RDS DT | I/O | RDS data in signal |
| 77 | P13 | RDS FM+ | I/O | RDS power supply. FM: Low, AM:High |
| 78 | P12 | NC | I/O | |
| 79 | P11 | NC | I/O | |
| 80 | P10 | NC | I/O | |
| 81 | P07 | TUNER DO | I/O | Data input signal for tuner contorol |
| 82 | P06 | TUNER CLK | I/O | Clock signal for tuner contorol |
| 83 | P05 | TUNER DI | I/O | Data output signal for tuner contorol |
| 84 | P04 | TUNER CE | I/O | Chip select signal for tuner contorol |
| 85 | P03 | 6 OHM | I/O | if stop mode, port L, else according to setting (J model No connect) |
| 86 | P02 | NC | I/O | |
| 87 | P01 | NC | I/O | |
| 88 | P00 | DECO MUTE | I/O | 1st DSP detect port |
| 89 | P107/AN7/KI3 | XPROTECT | I/O | Power supply abnormal condition detection. H: Normal, L: Abnormal. |
| 90 | P106/AN6/KI2 | MVRATT | I/O | Master volume ATT control (-15dB or less : L) |
| 91 | P105/AN5/KI1 | NC | I/O | |
| 92 | P104/AN4/KI0 | iPod POW | I/O | IPod power supply. H always. When abnormally detecting it, it makes it to L. |
| 93 | P103/AN3 | NC | I/O | |
| 94 | P102/AN2 | SIMUKE1 | I/O | Input 1 to switch region |
| 95 | P101/AN1 | SIMUKE2 | I/O | Input 2 to switch region |
| 96 | AVSS | AVSS | | connects with VCC. |
| 97 | P100/AN0 | HP DET | I/O | HP detection H:detected. |
| 98 | VREF | VREF | | connects with VCC. |
| 99 | AVcc | AVCC | | connects with VCC. |
| 100 | P97/ADTRG/SIN4 | USDAO | I/O | data input from USB |

## ■ PE5550A (FRONT DISPLAY ASSY : IC401)

- **System Control MCU**

### ■ Pin Arrangement (Top View)

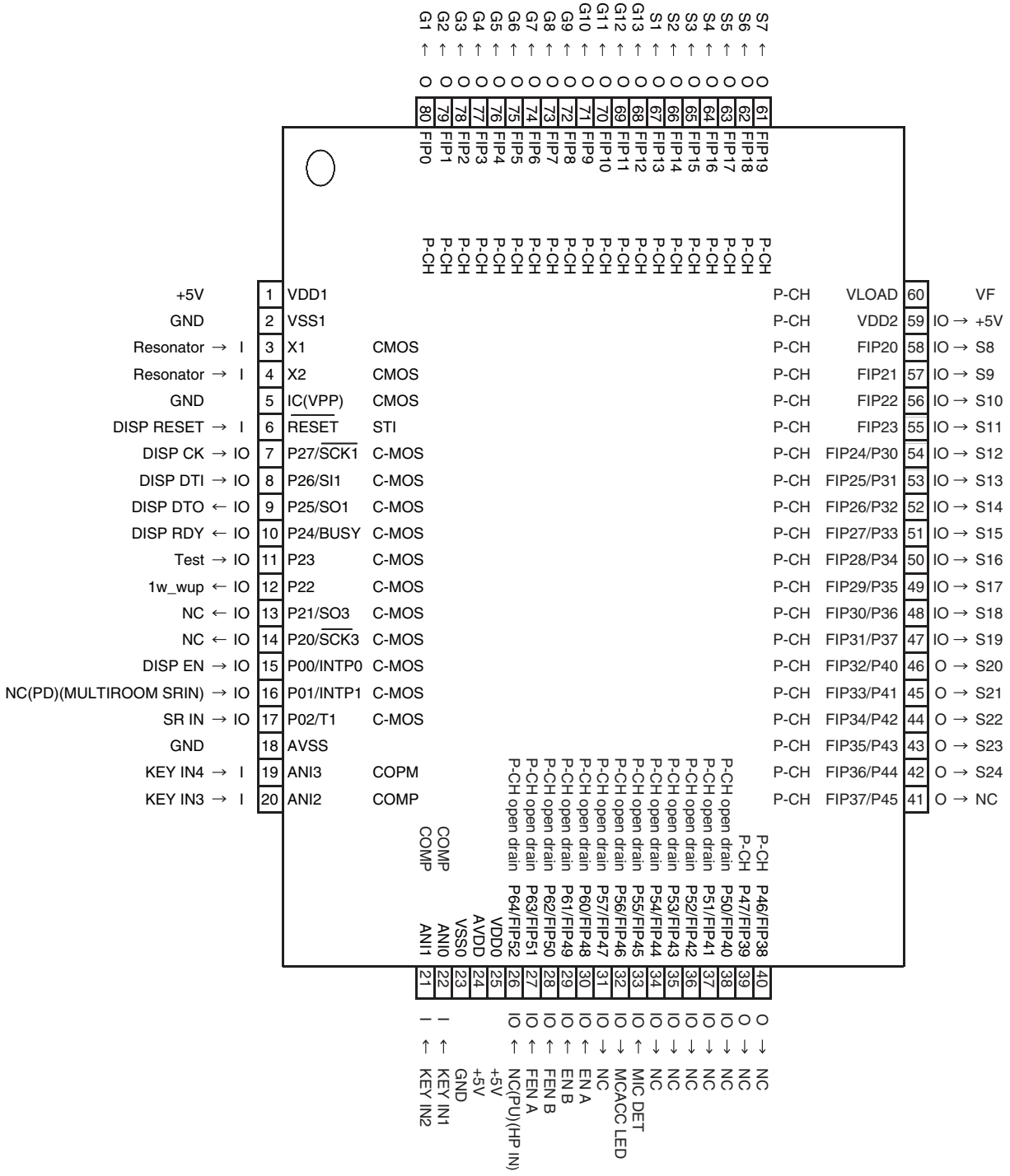

## • Pin Function

| No. | Port | Pin Name | I/O | Pin Function |
|---|---|---|---|---|
| 1 | VDD1 | +5V | - | positive power supply |
| 2 | VSS1 | GND | - | ground potential |
| 3 | X1 | Resonator | I | crystal connection for system clock oscillation |
| 4 | X2 | Resonator | - | crystal connection for system clock oscillation |
| 5 | IC(VPP) | GND | - | |
| 6 | RESET | DISP RESET | I | receive reset signal from main u-com |
| 7 | P27/SCK1 | DISP CK | I/O | clock signal from main u-com |
| 8 | P26/SI1 | DISP DTI | I/O | data input from main u-com |
| 9 | P25/SO1 | DISP DTO | I/O | data out to main u-com |
| 10 | P24/BUSY | DISP RDY | I/O | ready signal from main u-com |
| 11 | P23 | Test | I/O | test mode input for checker |
| 12 | P22 | 1w_wup | I/O | output wakeup signal to main u-com |
| 13 | P21/SO3 | NC | I/O | |
| 14 | P20/SCK3 | NC | I/O | |
| 15 | P00/INTP0 | DISP EN | I/O | enable signal from main u-com |
| 16 | P01/INTP1 | NC | I/O | |
| 17 | P02/T1 | SR IN | I/O | remote control signal input from main room |
| 18 | AVSS | GND | - | ground potential for A/D converter |
| 19 | ANI3 | KEY IN4 | I | |
| 20 | ANI2 | KEY IN3 | I | |
| 21 | ANI1 | KEY IN2 | I | |
| 22 | ANI0 | KEY IN1 | I | |
| 23 | VSS0 | GND | - | ground potential for ports |
| 24 | AVDD | +5V | - | analog power voltage input to A/D converter |
| 25 | VDD0 | +5V | - | positive power supply to ports |
| 26 | P64/FIP52 | NC | I/O | |
| 27 | P63/FIP51 | FEN A | I/O | MULTI JOG(Right) |
| 28 | P62/FIP50 | FEN B | I/O | MULTI JOG(Left) |
| 29 | P61/FIP49 | EN B | I/O | VOLUME JOG1(-) |
| 30 | P60/FIP48 | EN A | I/O | VOLUME JOG1(+) |
| 31 | P57/FIP47 | NC | I/O | NC |
| 32 | P56/FIP46 | MCACC LED | I/O | MCACC LED output |
| 33 | P55/FIP45 | MIC DET | I/O | MIC detection. L:detected, H:No detect |
| 34 | P54/FIP44 | NC | I/O | NC |
| 35 | P53/FIP43 | NC | I/O | NC |
| 36 | P52/FIP42 | NC | I/O | NC |
| 37 | P51/FIP41 | NC | I/O | NC |
| 38 | P50/FIP40 | NC | I/O | NC |
| 39 | P47/FIP39 | NC | O | NC |
| 40 | P46/FIP38 | NC | O | NC |
| 41 | FIP37/P45 | NC | I/O | NC |
| 42 | FIP36/P44 | S24 | O | Display |
| 43 | FIP35/P43 | S23 | O | Display |
| 44 | FIP34/P42 | S22 | O | Display |
| 45 | FIP33/P41 | S21 | O | Display |
| 46 | FIP32/P40 | S20 | O | Display |
| 47 | FIP31/P37 | S19 | O | Display |
| 48 | FIP30/P36 | S18 | O | Display |
| 49 | FIP29/P35 | S17 | O | Display |
| 50 | FIP28/P34 | S16 | O | Display |

## • Pin Function

| No. | Port | Pin Name | I/O | Pin Function |
|---|---|---|---|---|
| 51 | FIP27/P33 | S15 | O | Display |
| 52 | FIP26/P32 | S14 | O | Display |
| 53 | FIP25/P31 | S13 | O | Display |
| 54 | FIP24/P30 | S12 | O | Display |
| 55 | FIP23 | S11 | O | Display |
| 56 | FIP22 | S10 | O | Display |
| 57 | FIP21 | S9 | O | Display |
| 58 | FIP20 | S8 | O | Display |
| 59 | VDD2 | +5V | - | positive power supply to FIP controller. |
| 60 | VLOAD | VF | - | pull down resistor connection of FIP controller |
| 61 | FIP19 | S7 | O | Display |
| 62 | FIP18 | S6 | O | Display |
| 63 | FIP17 | S5 | O | Display |
| 64 | FIP16 | S4 | O | Display |
| 65 | FIP15 | S3 | O | Display |
| 66 | FIP14 | S2 | O | Display |
| 67 | FIP13 | S1 | O | Display |
| 68 | FIP12 | G13 | O | Display |
| 69 | FIP11 | G12 | O | Display |
| 70 | FIP10 | G11 | O | Display |
| 71 | FIP9 | G10 | O | Display |
| 72 | FIP8 | G9 | O | Display |
| 73 | FIP7 | G8 | O | Display |
| 74 | FIP6 | G7 | O | Display |
| 75 | FIP5 | G6 | O | Display |
| 76 | FIP4 | G5 | O | Display |
| 77 | FIP3 | G4 | O | Display |
| 78 | FIP2 | G3 | O | Display |
| 79 | FIP1 | G2 | O | Display |
| 80 | FIP0 | G1 | O | Display |

## ■ R2S15205FP (MAIN ASSY : IC108)

• 8ch electronic volume with 11 input selectors and tone control

● **Block Diagram**

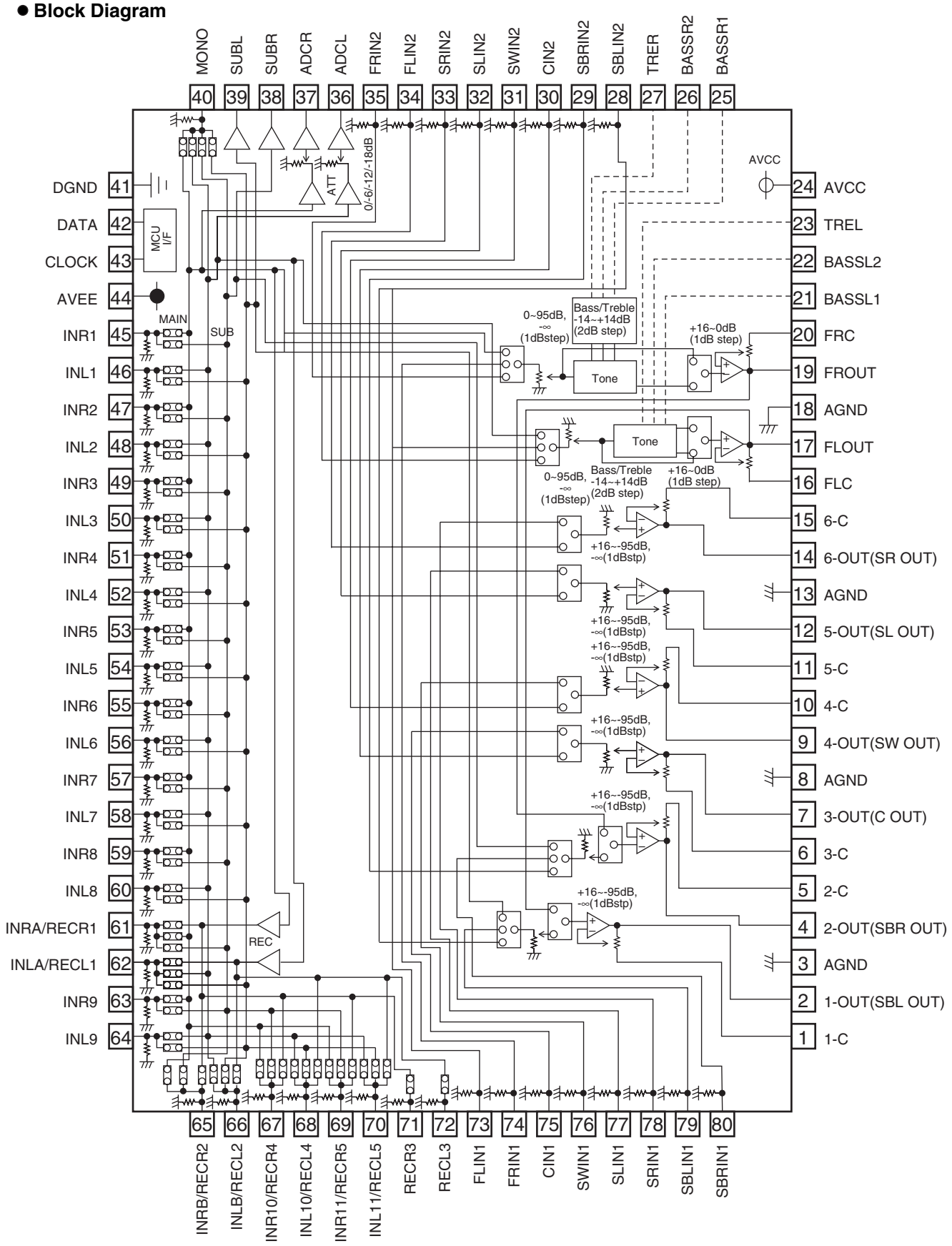

## ● Pin Function

| PIN No. | Name | Function |
|---|---|---|
| 19,17,<br>14,12,<br>9,7,<br>4,2 | FROUT,FLOUT,<br>6-OUT,5-OUT,<br>4-OUT,3-OUT,<br>2-OUT,1-OUT | Output pin of FL/FR/C/SW/SL/SR/SBL/SBR channel |
| 20,16,<br>15,11,<br>10,6,<br>5,1 | FRC,FLC,<br>6-C,5-C,<br>4-C,3-C,<br>2-C,1-C | Connects capacitor for reducing click noise of<br>L/R/C/SW/SL/SR/SBL/SBR channel volume |
| 3,8,<br>13,18 | AGND | Analog ground of internal circuit |
| 23,27 | TREL,TRER | Frequency characteristic setting pin of L/R channel tone control(Treble) |
| 21,22,<br>25,26 | BASSL1,BASSL2,<br>BASSR1,BASSR2, | Frequency characteristic setting pin of L/R channel tone control(Bass) |
| 24 | AVCC | Positive power supply to internal circuit |
| 35,34,<br>33,32,<br>31,30,<br>29,28 | FRIN2,FLIN2,<br>SRN2,SLIN2,<br>SWN2,CIN2,<br>SBRIN2,SBLIN2, | Input pin of L/R/C/SW/SL/SR/SBL/SBR channel(Multi IN 1/2) |
| 73,74,<br>75,76,<br>77,78,<br>79,80 | FLIN1,FRIN1,<br>CIN1,SWIN1,<br>SLIN1SRIN1,<br>SBLIN1,SBRIN1 | |
| 41 | DGND | Digital ground of internal circuit |
| 42 | DATA | Input pin of control data |
| 43 | CLOCK | Input pin of control clock |
| 44 | AVEE | Negative power supply to internal circuit |
| 46,48,50,<br>52,54,56,<br>58,60,64 | INL1,INL2,INL3,<br>INL4,INL5,INL6,<br>INL7,INL8,INL9 | Input pin of L/R channel(Input Selector) |
| 45,47,49,<br>51,53,55,<br>57,59,63 | INR1,INR2,INR3,<br>INR4,INR5,INR6,<br>INR7,INR8,INR9 | |
| 40 | MONO | Input pin of monaural(Input Selector) |
| 38,39 | SUBL,SUBR | Output pin for L/R channel SUB Output |
| 36,37 | ADCL,ADCR | Output pin for L/R channel ADC |
| 72 | RECL3 | Output pin for L/R channel REC Output |
| 71 | RECR3 | |
| 61,62,<br>65,66,<br>67,68,<br>69,70 | INRA/RECR1,INLA/RECL1,<br>INRB/RECR2,INLB/RECL2,<br>INR10/RECR4,INL10/RECL4,<br>INR11/RECR5,INL11/RECL5, | Input pin of L/R channel(Input Selector)/<br>Output pin for L/R channel REC Output |

# 7.3 EXPLANATION

## 7.3.1 DETECTION CIRCUIT

1. DC Derection Circuit Diagram : Example of VSX-816/KUXJ/CA

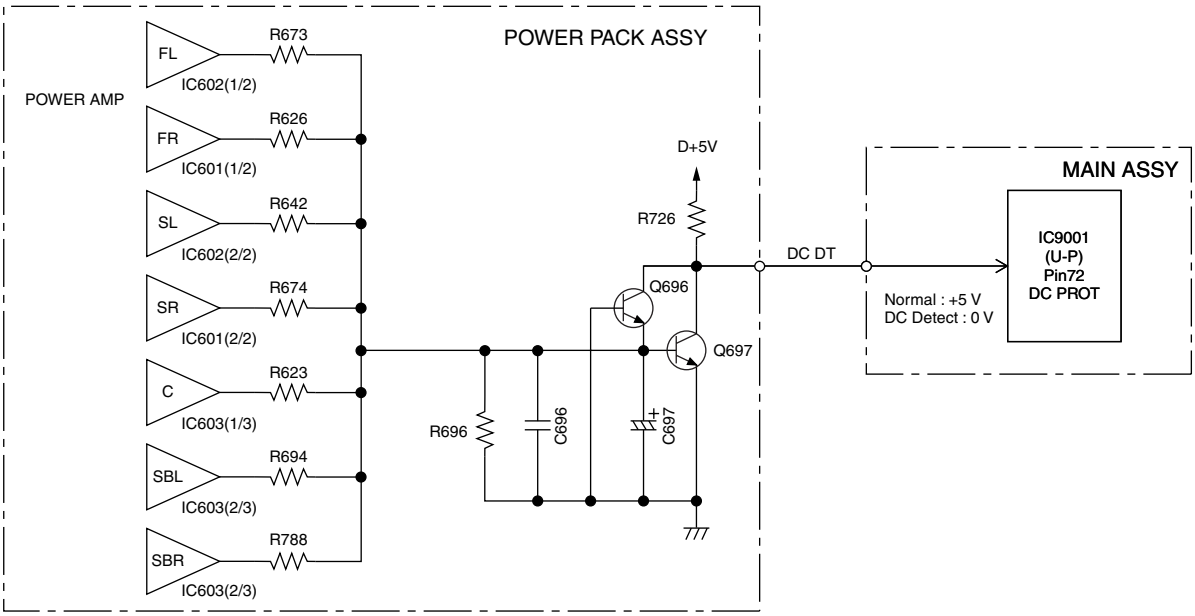


2. Overload Detection Circuit Diagram: Example of VSX-816/KUXJ/CA FRONT Channel

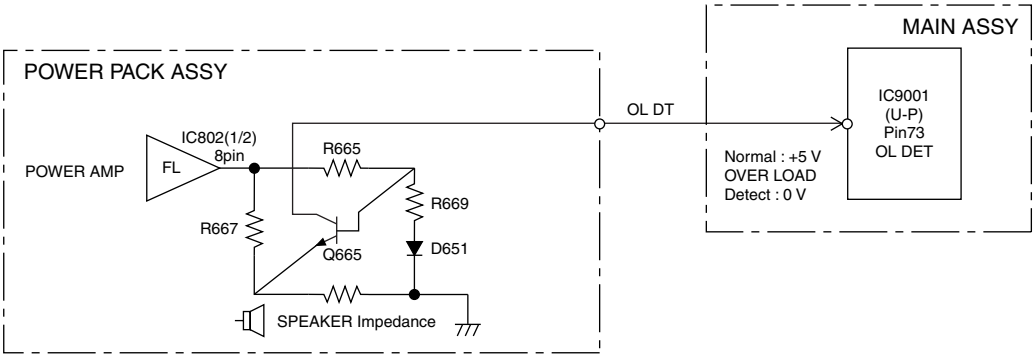


3. Fan Stop Prottection Circuit Diagram

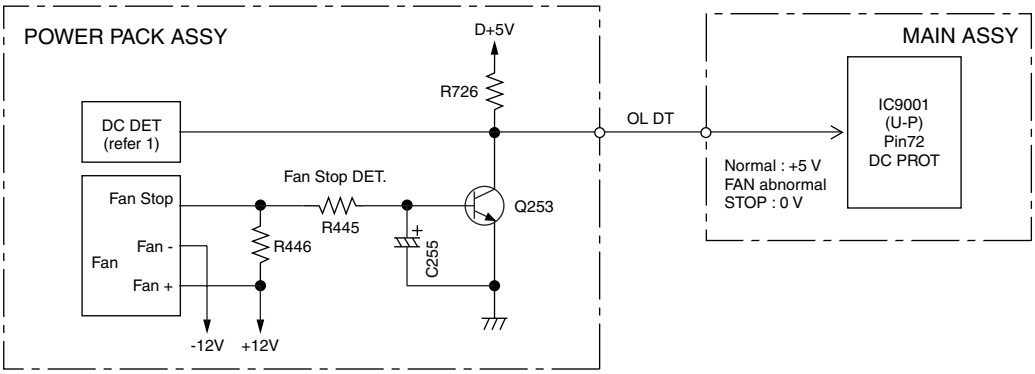

## 4. XPROTECT Detection Circuit Diagram

When below 6 kind of voltage supply become to be short circuit to GND, XPROTECT circuit work and U-P input port voltage change from +5 V to 0 V. The U-P detect this condition as ERROR.

- Voltage supply to POWER AMP IC (V neck+)
- Voltage supply to POWER AMP IC (V neck-)
- Voltage supply to POWER AMP IC (VH+)
- Voltage supply to POWER AMP IC (VH-)
- Voltage supply to +12 V REGULATOR IC
- Voltage supply to -12 V REGULATOR IC

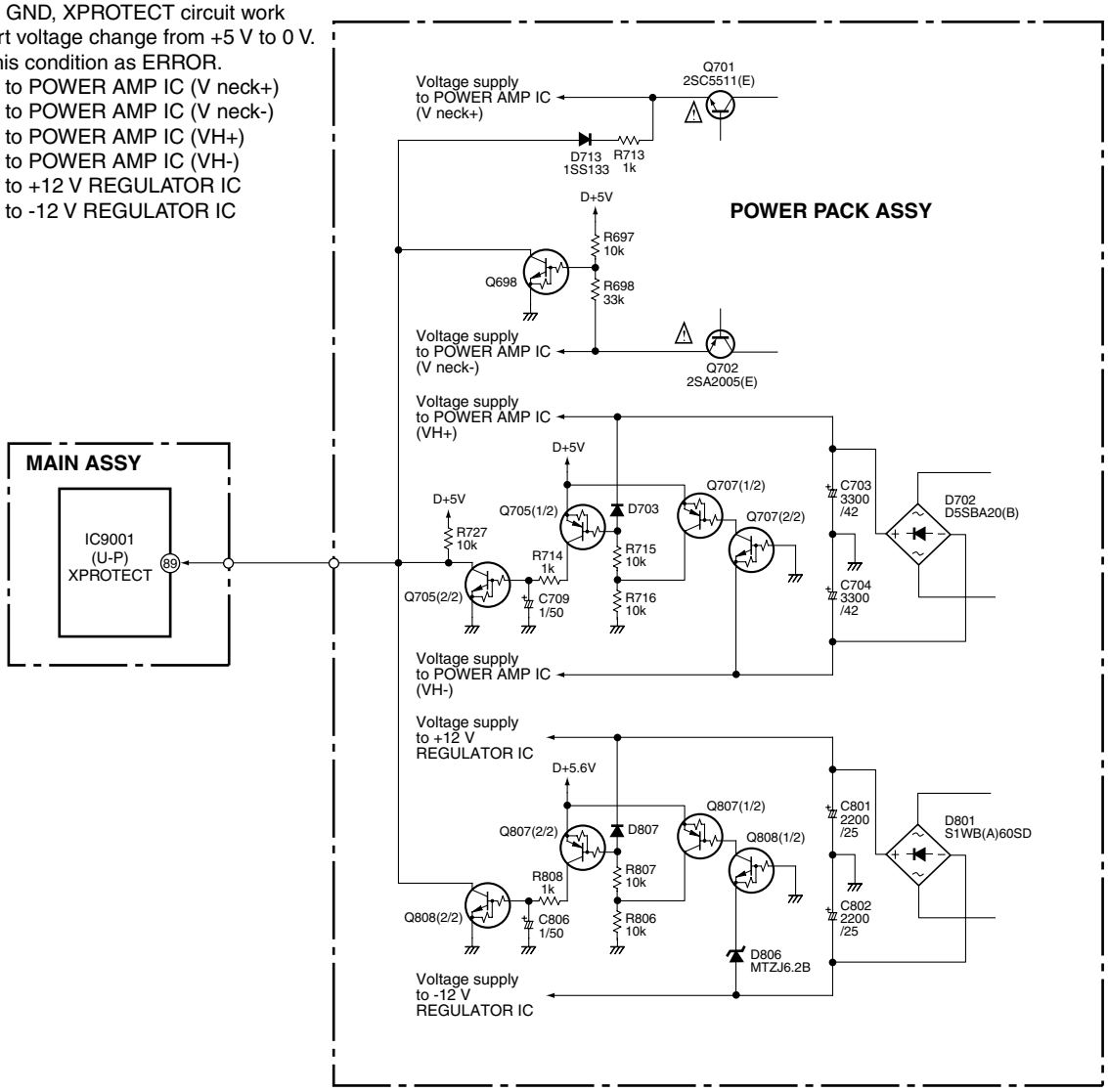

## 7.3.2 AMPLIFIER SYSTEM PROTECTION OPERATION SPECIFICATION

### 1. DC-abnormality detection

DC detection is only enabled 2 seconds after power-on.
If there is a fault in the power amplifier or a high-level signal lower than 5 Hz is input, the DC_DET port becomes “L”.
If the “L” is detected, the microprocessor will perform as following flow chart.

In the case of simultaneous detection with the overload protection circuit, DC-abnormality detection is performed preferentially to overload detection.

When a DC abnormality is detected, A.MUTE* is turned on, speaker relay is turned off, then "AMP_ERR" flashes on the display.

*A.MUTE : Audio mute command

↓

The abnormality continues for 3 seconds.

↓ Continues.

The power is shut off.

↓ Recovery

The program restarts.

↓

Power key not effective.

However, when the following keys are pushed so that the key input of a line and the service can be carried out, power can be on.
① TESTMODE ON (A55F+A55F)
② When power off, push FRONT ENTER key + ADVANCED SURROUND key continuously 2sec.
(②: When a DC abnormality is detected and the power is shut off.)
Any other key input from front panel or remote control will not be detected.

### 2. Overload detection

If the speaker terminals are short-circuited or low-load driving is detected, the OL_DET port becomes “L”.
If the “L” is detected, the microprocessor will perform as following flow chart.

When an overload is detected, A.MUTE* is turned on, speaker relay is turned off, then "OVERLOAD" flashes on the display.

↓

The abnormality continues for 3 seconds.

↓ Continues.

The power is shut off.

↓ Recovery

The power is shut off even if the unit recovers.

### 3. XPROTECT detection

XPROTECT is started to be monitored 200msec after power on.
XPROTECT port is checked every 20msec.
If Low level (ERROR) is recognized during consecutive 9 times, micon judge it as XPROTECT ERROR.

It processes more preferentially than DC abnormal detection and overload detection.

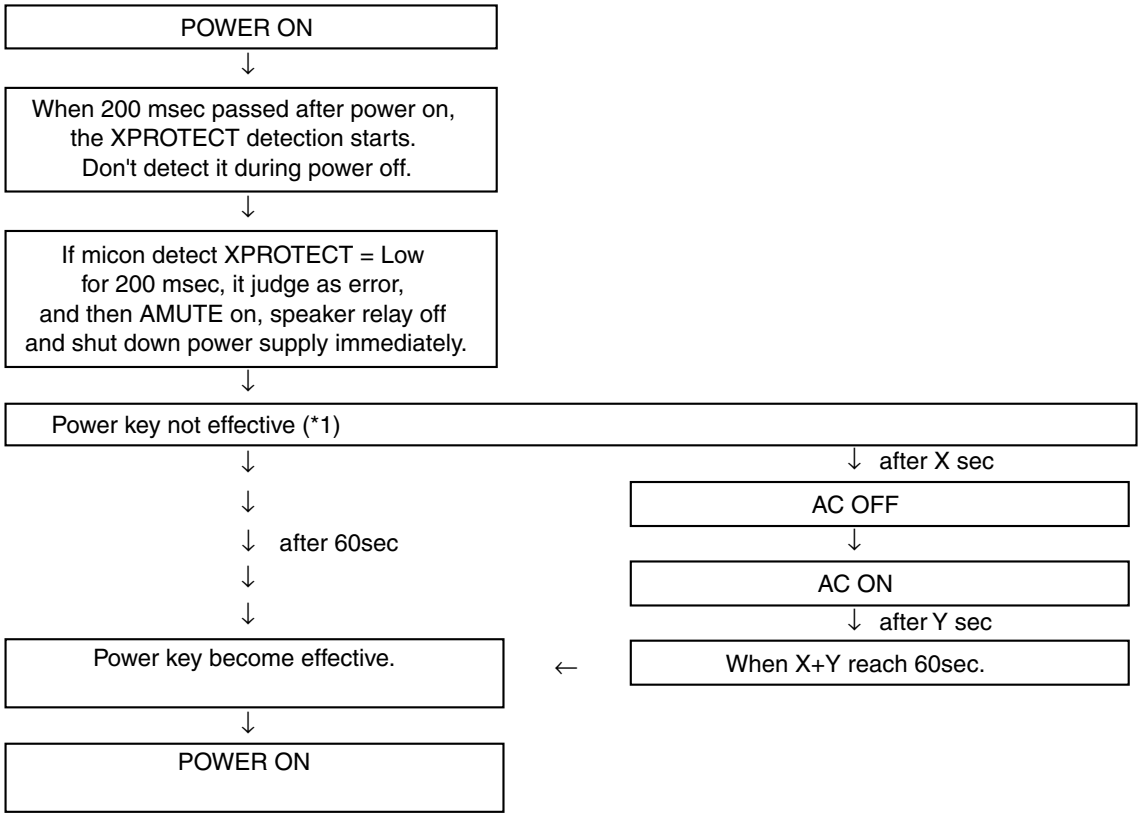


(*1) However, when the following keys are pushed so that the key input of a line and the service can be carried out, power can be on.
① TESTMODE ON (A55F+A55F)
② When power off, push FRONT ENTER key + ADVANCED SURROUND key continuously 2sec.
(Effective, only when power-off is carried out by DC detection / XPROTECT detection)
Any other key input from front panel or remote control will not be detected.

### 4. Fan stop detection operation flow in the DC abnormality detection

If the fan is forcibly stopped, the 'DC PROT' port becomes "L". Then an abnormality of fan is detected.

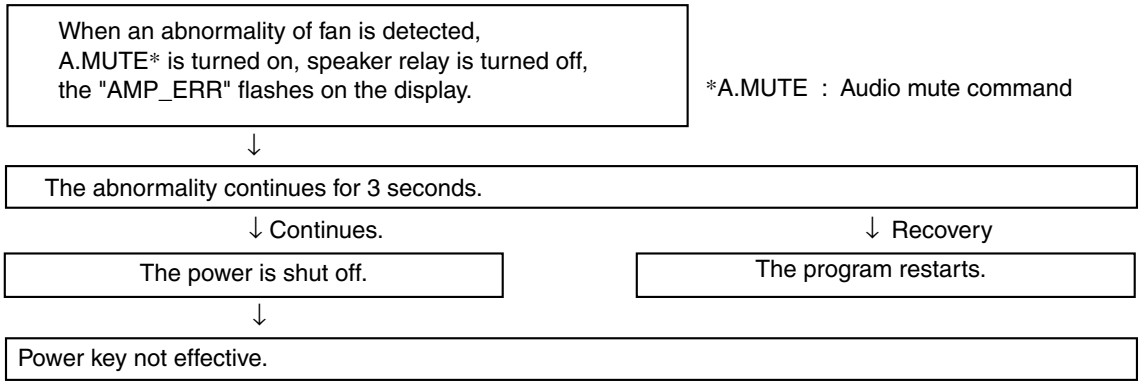


However, when the following keys are pushed so that the key input of a line and the service can be carried out, power can be on.
① TESTMODE ON (A55F+A55F)
② When power off, push FRONT ENTER key + ADVANCED SURROUND key continuously 2sec.
(Effective, only when power-off is carried out by DC detection)

## 7.3.3 AMPLIFIER FAILURE DIAGNOSIS FLOW CHART

### ■ Amplifier failure diagnosis flow chart

When DC detection is activated ("AMP_ERR" flashes on the display), failure (damage) of the power amplifier section is considered.
As DC detection and fan stop protection circuits commonly use same abnormality detection port in microprocessor, please make sure that the operation of fan motor is in normal condition before proceeding to the troubleshooting of amplifier.

**Caution:**
**When releasing the lock state of power key before repair, please be careful because there is the possibility that more damages will occur when turning on the power once again!**

• According to a symptom, perform the following confirmation beforehand.

1) Is the operation of fan motor in normal condition?
↓
2) Are there any Fuses and IC protectors open?
↓
3) After turn on the power, confirm that the supply voltage of the point that can be measured is appropriate. (Particularly the supply voltage of the power Tr and drive step)
↓
4) Whether the voltage of pin3 of IC600, IC601, IC602 or IC603 is equal to (VL-0.7V). If not (eg, equal to VH), then change the corresponding power pack IC600, IC601, IC602 or IC603.
↓
5) Furthermore, check the output DC voltage of each channel of power pack IC600, IC601, IC602 and IC603 to limit the failure channel and identify the defect power pack.

↓
• After identify the failure channel, check that each part is not damaged (resistor, diode... etc. value / open / short)

# 8. PANEL FACILITIES

## Front panel SX-316-S/MYXJ5

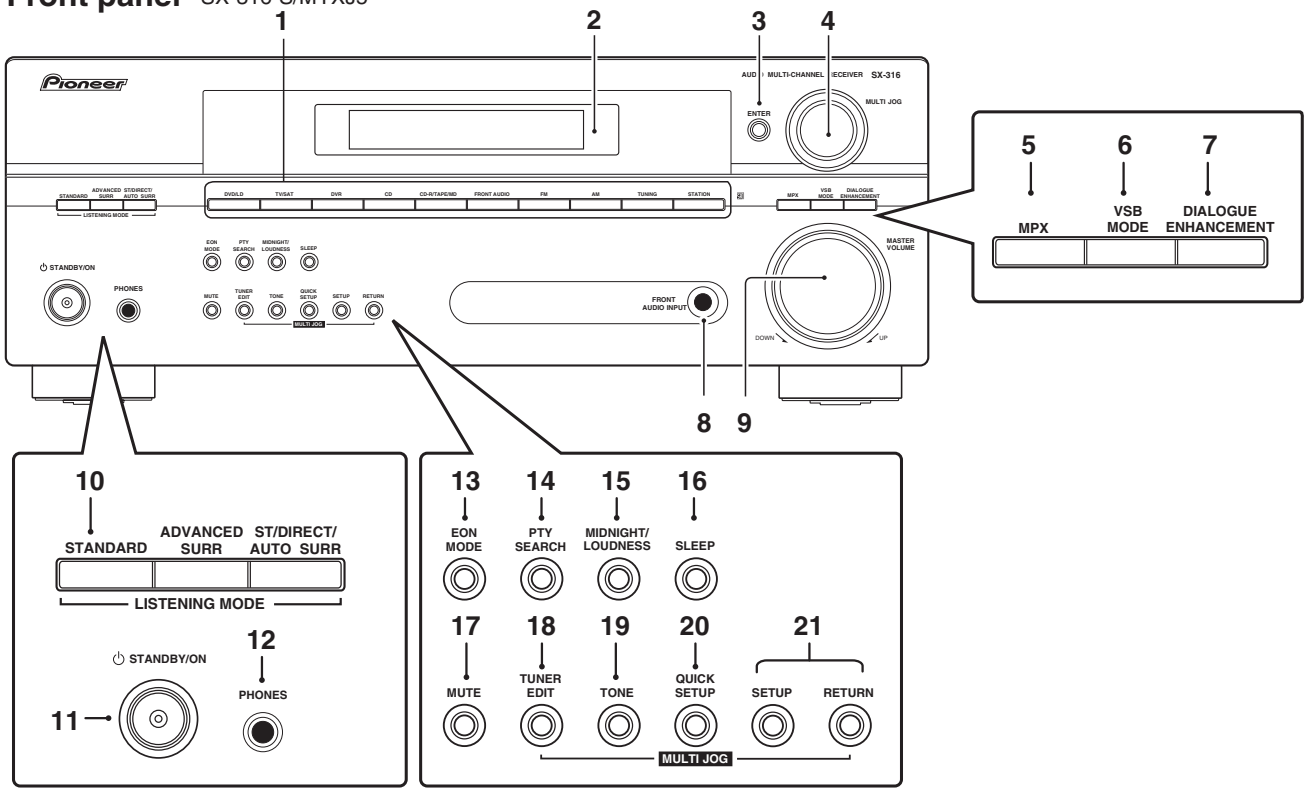


**1 Input select buttons**
Press to select an input source.

**2 Character display**

**3 ENTER**

**4 MULTI JOG dial**

**5 MPX**
Use to switch between auto stereo and mono reception of FM broadcasts. If the signal is weak then switching to mono will improve the sound quality.

**6 VSB MODE**
Selects the Virtual Surround Back (VSB) mode.

**7 DIALOGUE ENHANCEMENT**
This feature localizes dialog in the center channel to make it stand out from other background sounds in a TV or movie soundtrack.

**8 FRONT AUDIO INPUT**

**9 MASTER VOLUME**
Use to set the listening volume.

**10 LISTENING MODE buttons**

STANDARD
Press for Standard decoding and to switch between Pro Logic II options.

**ADVANCED SURR**
Switches between the various surround modes.

**ST/DIRECT/AUTO SURR**
Switches between direct and stereo playback. Direct playback bypasses the tone controls for the most accurate reproduction of a source. Also selects the Auto Surround mode (Auto playback).

**11 ⏻ STANDBY/ON**
Switches the receiver between standby and on.

**12 PHONES jack**

**13 EON MODE**
Use to search for programs that are broadcasting traffic or news information.

**14 PTY SEARCH**
Use this button to search for RDS program types.

**15 MIDNIGHT/LOUDNESS**
These features give you good sound at low volume levels when listening to movie (Midnight) or music (Loudness) sources. Press to switch between **MIDNIGHT**, **LOUDNESS**, and **OFF**.

**16 SLEEP**
Press to change the amount of time before the receiver switches into standby (**30 min - 60 min - 90 min - Off**).

**17 MUTE**
Mutes/unmutes the sound.

**18 TUNER EDIT**
Press to memorize and name a station for recall.

**19 TONE**
Press this button to access the bass and treble controls, which you can then adjust with the **MULTI JOG** dial.

**20 QUICK SETUP**

**21 System Setup menu controls**

**SETUP**
Press to access the System Setup menu.

**RETURN**
Confirm and exit the current menu screen.

## Display SX-316-S/MYXJ5

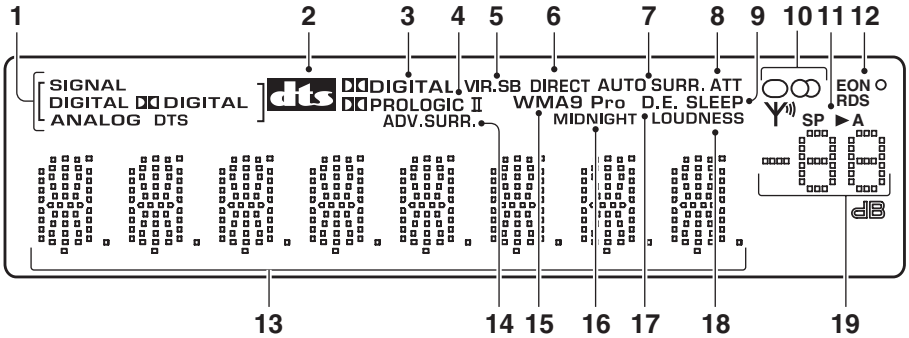


**1 SIGNAL indicators**
Lights to indicate the type of input signal assigned for the current component:

**DIGITAL**
Lights when a Dolby Digital[1] encoded signal is detected.

**ANALOG**
Lights when an analog signal is detected.

**DTS**
Lights when a DTS[2] encoded audio signal is detected.

**DIGITAL**
Lights when a digital audio signal is detected.

**2 dts**
When the **STANDARD** mode of the receiver is on, this lights to indicate decoding of a DTS multichannel signal.

**3 DIGITAL**
When the **STANDARD** mode of the receiver is on, this lights to indicate decoding of a Dolby Digital multichannel signal.

**4 PRO LOGIC II**
When the (**STANDARD**) Pro Logic II mode of the receiver is on, **PRO LOGIC II** lights to indicate Pro Logic II decoding (see Listening in surround sound for more on this).

**5 VIR. SB**
Lights during Virtual surround back processing.

**6 DIRECT**
Lights when source direct playback is in use. Direct playback bypasses the tone controls for the most accurate reproduction of a source.

**7 AUTO SURR.**
Lights when the Auto Surround feature is switched on (see Auto playback).

**8 ATT**
Lights when **ANALOG ATT** is used to attenuate (reduce) the level of the analog input signal.

**9 SLEEP**
Lights when the receiver is in sleep mode.

**10 Tuner indicators**

**/ MONO**
Lights when the mono mode is set using the **MPX** button.

**/ STEREO**
Lights when a stereo FM broadcast is being received in auto stereo mode.

**/ TUNED**
Lights when a broadcast is being received.

**11 Speaker indicator**
Shows if the speaker system is on or not. **SP►A** means the speakers are switched on. **SP►** means the headphones are connected.

**12 EON/RDS indicators**

**EON**
Lights when the EON mode is set, and flashes during an EON broadcast. The indicator lights when the current station carries the EON service.

**RDS**
Lights when an RDS broadcast is received.

**13 Character display**

**14 ADV.SURR. (Advanced Surround)**
Lights when one of the Advanced Surround modes has been selected.

**15 WMA9 Pro**
Lights to indicate decoding of a WMA9 Pro signal.

**16 MIDNIGHT**
Lights during Midnight listening.

**17 D.E.**
Lights when Dialog Enhancement (**DIALOG E**) is switched on.

**18 LOUDNESS**
Lights during Loudness listening.

**19 Master volume level**
Shows the overall volume level. **---dB** indicates the minimum level, and **- 0 dB** indicates the maximum level.

## Remote control SX-316-S/MYXJ5

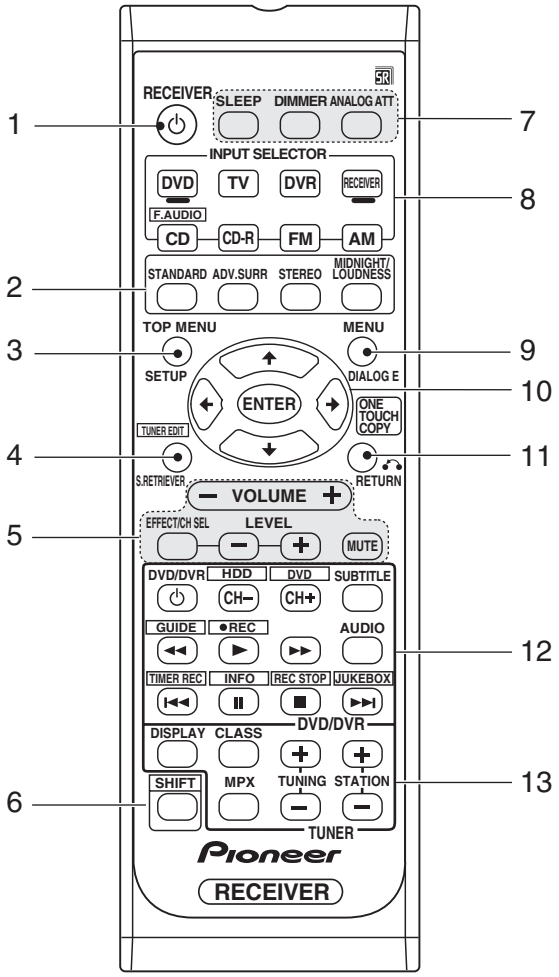


**1 RECEIVER**
Switches the receiver between standby and on.

**2 Listening mode buttons**

**STANDARD**
Press for Standard decoding and to switch between Pro Logic II options.

**ADV.SURR.**
Switches between the various surround modes.

**STEREO**
Switches between direct and stereo playback. Direct playback bypasses the tone controls for the most accurate reproduction of a source. Also selects the Auto Surround mode(Auto playback.

**MIDNIGHT/LOUDNESS**
These features give you good sound at low volume levels when listening to movie (Midnight) or music (Loudness) sources. Press to switch between **MIDNIGHT**, **LOUDNESS**, and **OFF**.

**3 TOP MENU**
Displays the disc "top"menu of a DVD disc.

**SETUP**
Press to access the System Setup menu.

**4 TUNER EDIT***
Press to memorize and name a station for recall.

Also functions as the SETUP button for DVD/DVR units.

**S. RETRIEVER**
Press to restore CD quality sound to compressed audio sources.

**5 RECEIVER CONTROL buttons**

**VOLUME +/-**
Use to set the listening volume.

**EFFECT/CH SEL**
Press repeatedly to select a channel, then use **LEVEL +/-** to adjust the level.
Also selects the Advanced Surround effect level (use **LEVEL +/-** to adjust).

**LEVEL +/-**
Use to adjust the effect and channel levels.

**MUTE**
Mutes/unmutes the sound.

**6 SHIFT**
Press to access commands in a rectangle (above the buttons) on the remote. These buttons are marked with an asterisk(* ) in this section.

**7 SLEEP**
Press to change the amount of time before the receiver switches into standby (**30 min - 60 min - 90 min - Off**).

**DIMMER**
Dims or brightens the display.

**ANALOG ATT**
Attenuates (lowers) the level of an analog input signal to prevent distortion.

**8 INPUT SELECTOR buttons**
Press to select an input source (press **DVD/DVR** to use the DVD player/recorder controls on the remote).

**RECEIVER**
Use to switch to the receiver controls on the remote control. Also used when setting up the surround sound for the receiver.

**9 MENU**
Displays the disc menu of DVD-Video discs.

**DIALOG E**
This feature localizes dialog in the center channel to make it stand out from other background sounds in a TV or movie soundtrack.

**10 ⬆⬇⬅➡ / ENTER**

**11 RETURN**
Confirm and exit the current menu screen.

**ONE TOUCH COPY***
Copies the currently playing title from DVD to HDD or vice-versa.

**12 DVD/DVR control buttons**
You can use these buttons to control a Pioneer DVD player or recorder connected to your system.(press **DVD/DVR** to access the below controls).

| Button | What it does |
|---|---|
| **DVD/ DVR⏻** | Turns DVD player or DVD recorder power on/off. |
| **AUDIO** | Changes the audio language or channel. |
| **SUBTITLE** | Displays/changes the subtitles on multilingual DVD-Video discs. |
| **CH +/-** | Switches channels. |
| **►** | Starts/resumes normal playback. |
| **II** | Pauses/unpauses a disc. |
| **■** | Stops playback. |
| **◄◄** | Press to start fast reverse scanning. |
| **►►** | Press to start fast forward scanning. |
| **I◄◄** | Skips to the start of the current track or chapter, then previous tracks/chapters. |
| **►►I** | Skips to the next track or chapter. |
| **HDD/ DVD*** | Switch between the hard disk and DVD controls for DVD/HDD recorders. |
| **GUIDE*** | Displays the guides on a DVD recorder. |
| **●REC*** | Starts recording. |
| **TIMER REC*** | Accesses the timer recording menu. |
| **INFO*** | Displays additional EPG information. |
| **REC STOP*** | Stops recording. |
| **JUKEBOX*** | Switches to the Jukebox feature. |
| **TUNER EDIT*** | Press to access the SETUP menu . |

**13 TUNER controls**
The **TUNING +/-** buttons can be used to find radio frequencies and the **STATION +/-** buttons can be used to select preset radio stations.

**DISPLAY**
Switch the display between station preset name, frequency (see tip on) and RDS data.

**CLASS**
Switches between the three banks (classes) of station presets.

**MPX**
Use to switch between auto stereo and mono reception of FM broadcasts. If the signal is weak then switching to mono will improve the sound quality.

## About the WMA9 Pro decoder

This unit has an on-board Windows Media® Audio 9 Professional (WMA9 Pro) decoder, so it is possible to playback WMA9 Pro-encoded audio using a coaxial or optical digital connection when connected to a WMA9 Pro-compatible player. However, the connected DVD player, set-top box, etc. must be able to output WMA9 Pro format audio signals through a coaxial or optical digital output.

Microsoft, Windows Media®, and the Windows logo are trademarks, or registered trademarks of Microsoft Corporation in the United States and/ or other countries.

## ■ CLEANING

Before shipping out the product, be sure to clean the following positions by using the prescribed cleaning tools:

| Position to be cleaned | Cleaning tools |
|---|---|
| Fans | Cleaning paper : GED-008 |