www.DataSheet4U.com

secos
Elektronische Bauelemente

SP820S THRU SP8100S

VOLTAGE 20V ~ 100V
8.0AMP Schottky Barrier Rectifiers

RoHS Compliant Product
A suffix of "-C" specifies halogen-free

ITO-220

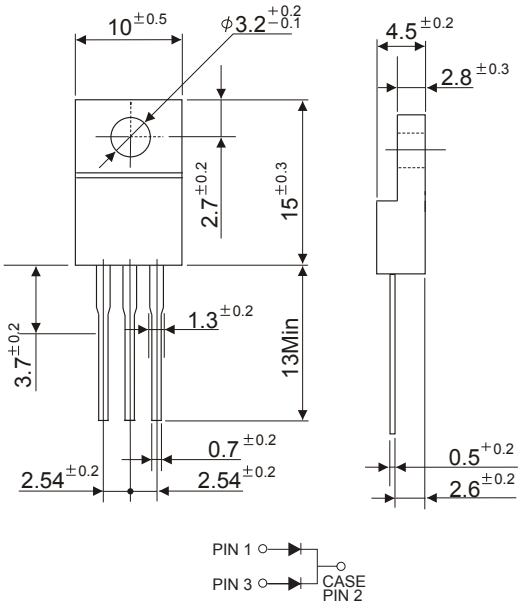

Dimensions in millimeters

FEATURES

* Low forward voltage drop
* High current capability
* High reliability
* High surge current capability
* Epitaxial construction

MECHANICAL DATA

* Case: Molded plastic
* Epoxy: UL 94V-0 rate flame retardant
* Lead: Lead solderable per MIL-STD-202, method 208 guaranteed
* Polarity: As Marked
* Mounting position: Any
* Weight: 2.24 grams

MAXIMUM RATINGS AND ELECTRICAL CHARACTERISTICS

Rating 25°C ambient temperature unless otherwise specified.
Single phase half wave, 60Hz, resistive or inductive load.
For capacitive load, derate current by 20%.

www.DataSheet4U.com

TYPE NUMBER	SP820S	SP840S	SP860S	SP880S	SP8100S	UNITS
Maximum Recurrent Peak Reverse Voltage	20	40	60	80	100	V
Maximum RMS Voltage	14	32	48	64	80	V
Maximum DC Blocking Voltage	20	40	60	80	100	V
Maximum Average Forward Rectified Current See Fig. 1	8.0					A
Peak Forward Surge Current, 8.3 ms single half sine-wave superimposed on rated load (JEDEC method)	150					A
Maximum Instantaneous Forward Voltage at 8.0A	0.55		0.70	0.80		V
Maximum DC Reverse Current Ta=25°C	5.0					mA
at Rated DC Blocking Voltage Ta=100°C	50					mA
Typical Junction Capacitance (Note1)	700			460		pF
Typical Thermal Resistance RθJC (Note 2)	3.5					°C/W
Operating Temperature Range TJ	-50 ~ +125					°C
Storage Temperature Range TSTG	-65 ~ +150					°C

NOTES:

1. Measured at 1MHz and applied reverse voltage of 4.0V D.C.

2. Thermal Resistance Junction to Case.

www.DataSheet4U.com

Elektronische Bauelemente

SP820S THRU SP8100S

VOLTAGE 20V ~ 100V

8.0AMP Schottky Barrier Rectifiers

RATING AND CHARACTERISTIC CURVES (SP820S THRU SP8100S)

FIG.1-TYPICAL FORWARD CURRENT DERATING CURVE

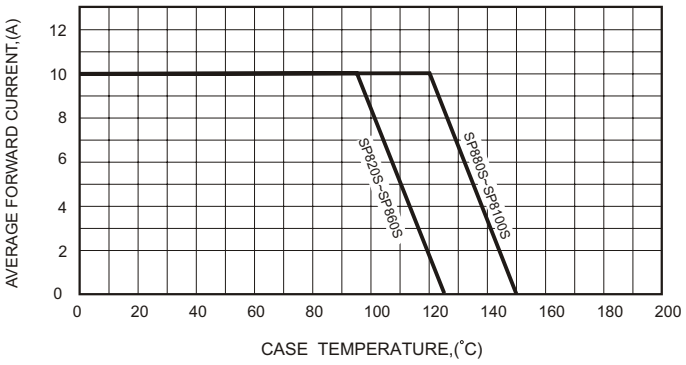

FIG.2-TYPICAL FORWARD CHARACTERISTICS

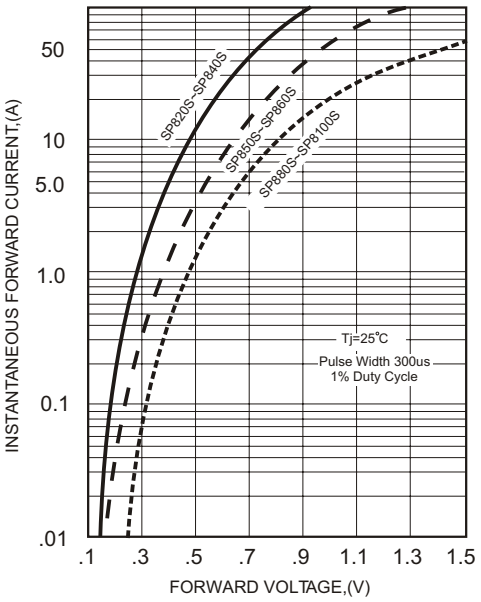

FIG.3-MAXIMUM NON-REPETITIVE FORWARD SURGE CURRENT

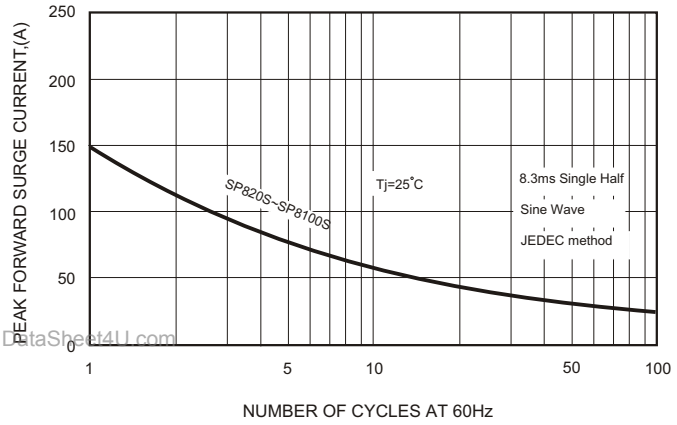

www.DataSheet4U.com

FIG.4-TYPICAL JUNCTION CAPACITANCE

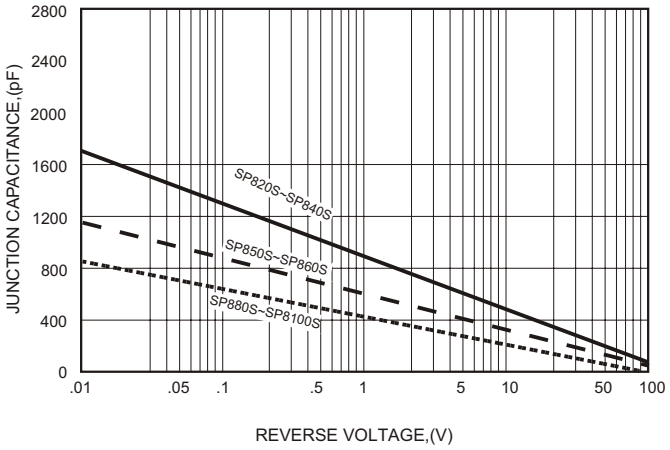
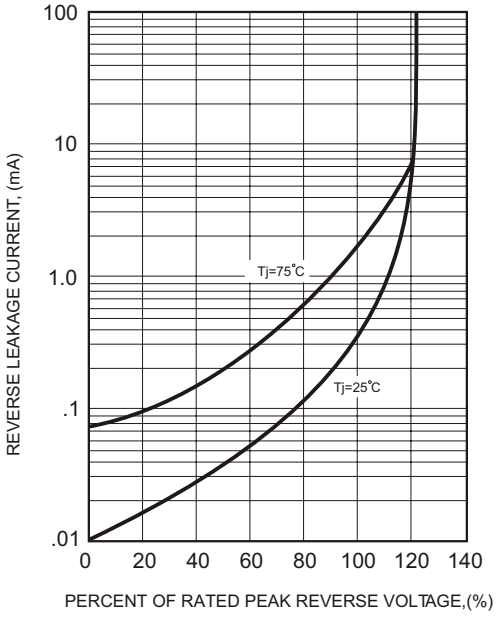
FIG.5 - TYPICAL REVERSE CHARACTERISTICS