REV.	DESCRIPTION	DATE
A	NEW DRAWING	7/30/2007

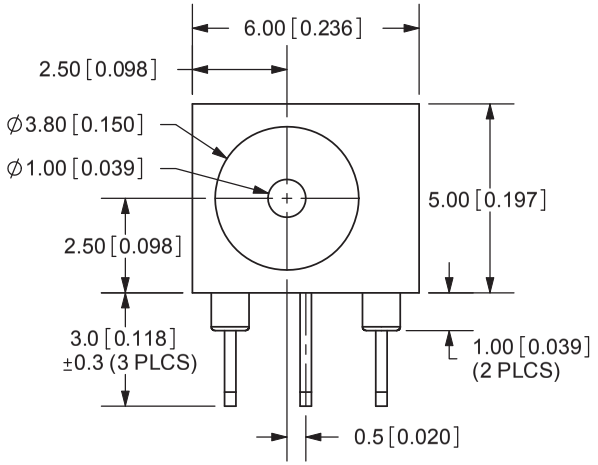

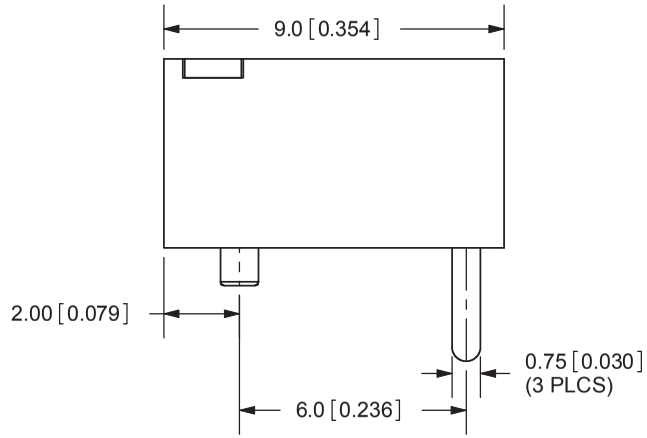

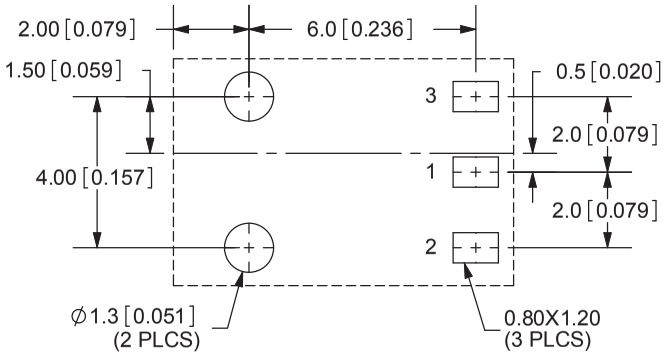

PCB LAYOUT
TOP VIEW

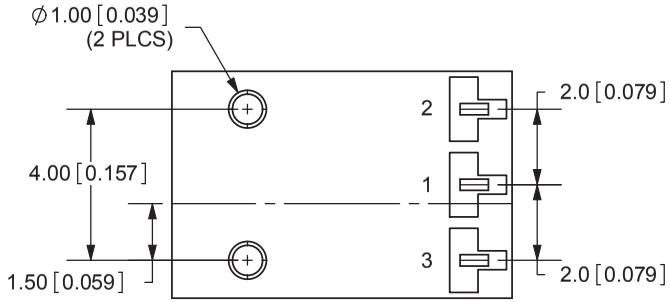

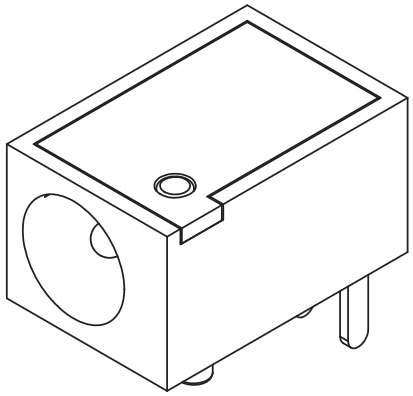

TOLERANCE:
X.X±0.2mm
X.XX±0.1mm
X.XXX±0.05mm

RoHS

SPECIFICATIONS:
RATING: 16V DC@ 2A
CONTACT RESISTANCE: 50m OHMS MAX
INSULATION RESISTANCE: 100M OHMS MIN: 500V DC
VOLTAGE WITHSTAND: 500V AC R.M.S. FOR 1 MINUTE
LIFE: 5,000 CYCLES
OPERATING TEMP: -25° ~ +85°C

MODEL NO.	PJ-036C
SCHEMATIC	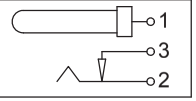

CENTER PIN DIAMETER 1.0mm Dia.

	MATERIAL	PLATING
CENTER PIN	Brass	Tin
TERMINAL 1	Brass	Tin
TERMINAL 2	Copper Alloy	Tin
TERMINAL 3	Brass	Tin
BODY	PA66	

CUI INC
20050 SW 112th Ave.
Tualatin, OR 97062
Phone: 503-612-2300
800-275-4899
Fax: 503-612-2383
Website: www.cui.com

TITLE: DC POWER JACK		REV: A
PART NO. PJ-036C	UNITS: MM [INCHES]	
DRAWN BY: ZRJ	APPROVED BY:	SCALE: 5:1

PC FILE NAME: PJ-036C

COPYRIGHT 2007 BY CUI INC.