Horizontal Type Bottom Contact — P7045B

www.DataSheet4U.net

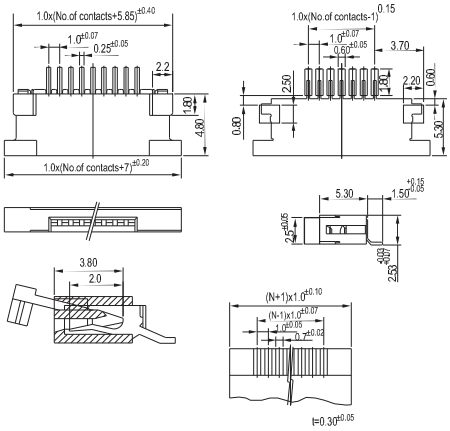

Vertical Type (Contact) — P7045V

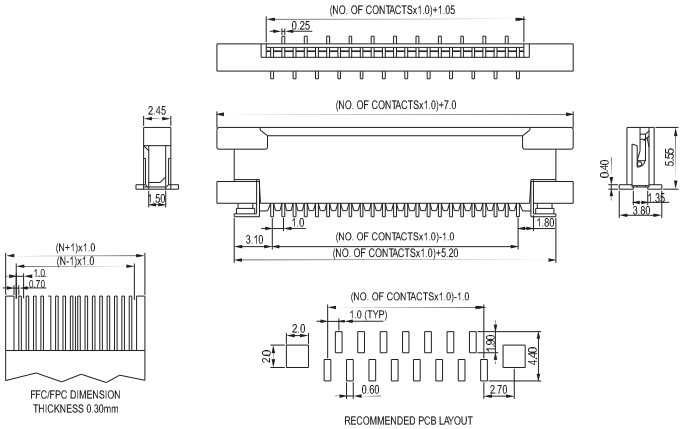

Flat Cable for 1.0mm Pitch FPC connectors — P704C-XX-1-X

Description	ABBR.	Formulation
Pitch	P	1.0
Total Length	Pt	Px(n - 1)
Width	W	Px(n + 1)
Margin	M	P-(Cw x ½)
Conduct Width	Cw	0.6
Conduct Thickness	Ct	Typical
Total (cable) Length	L	Typical
Strip Length	S1/S2	4/4
Support Tape Length	S3/S4	8/8
Terminal Thickness	T	0.3

No. of Pins
04 to 50

Type of
conduct position
1. Contacts on same sides
2. Contacts on alternate sides
3. One end Mating &
   Other End Solder Type
4. Both sides solder type

Cable length
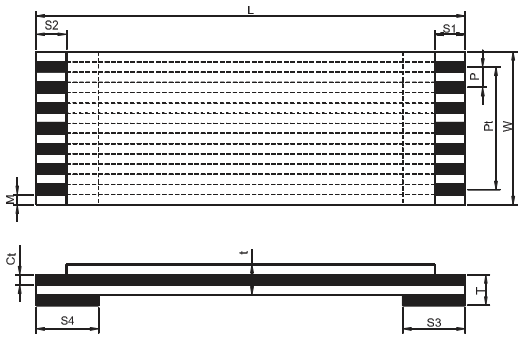
n-No. of conducts