## ■ PHYSICAL DATA

| Item | Contents | Unit |
|---|---|---|
| LCD type | STN | --- |
| LCD duty | 1/16 | --- |
| LCD bias | 1/5 | --- |
| Viewing direction | 6 | o' clock |
| Module size (W×H×T) | 79.5 × 35.5 × 13MAX | mm |
| Viewing area (W×H) | 64.4 × 13.8 | mm |
| Number of characters (characters×lines) | 16 × 2 | --- |
| Character matrix (W×H) | 5 × 8 | dots |
| Character size (W×H) | 2.95 × 4.35 | mm |
| Dot size (W×H) | 0.55 × 0.5 | mm |
| Dot pitch (W×H) | 0.6 × 0.55 | mm |

## ■ EXTERNAL DIMENSIONS

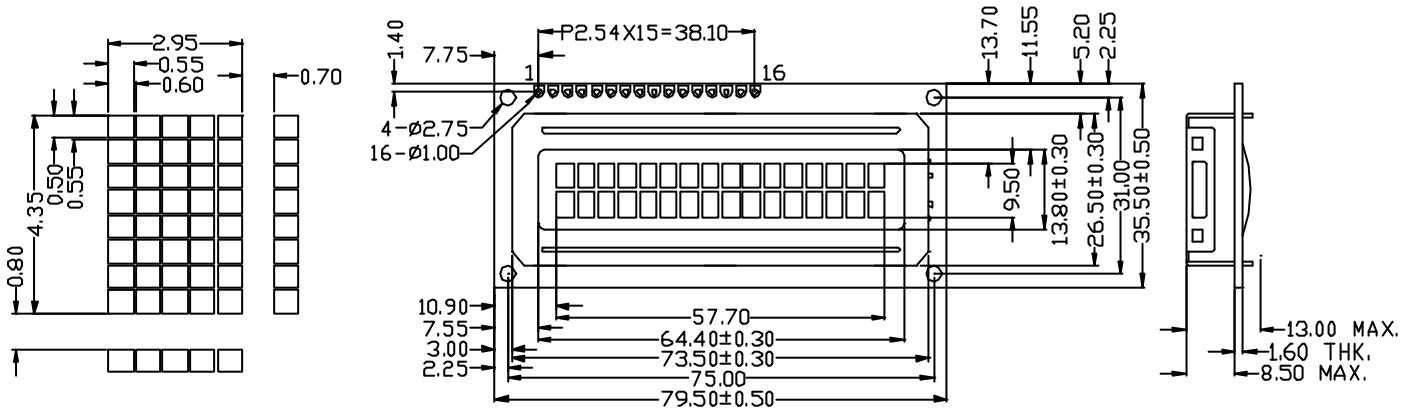


## ■ BLOCK DIAGRAM

| 1 | 2 | 3 | 4 | 5 | 6 | 7 | 8 | 9 | 10 | 11 | 12 | 13 | 14 | 15 | 16 |
|---|---|---|---|---|---|---|---|---|---|---|---|---|---|---|---|
| VSS | VDD | VO | RS | R/W | E | DB0 | DB1 | DB2 | DB3 | DB4 | DB5 | DB6 | DB7 | BLK | BLA |

BY SOLDER OPTION J1, J3: 15=BLA, 16=BLK; BY SOLDER OPTION J2, J4: 15=BLK, 16=BLA

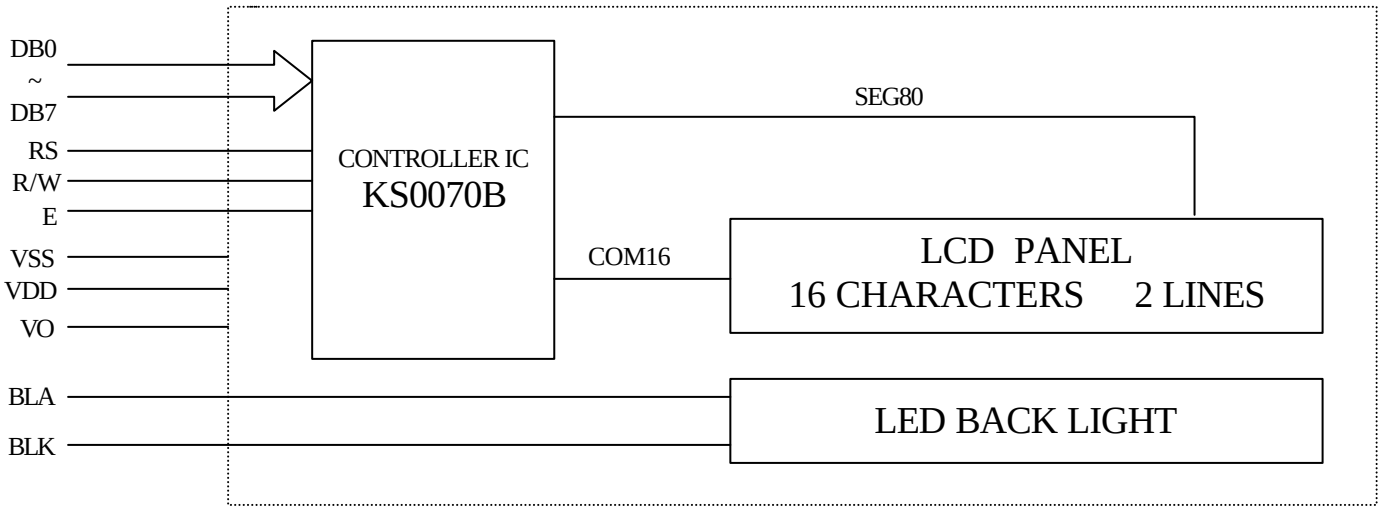


www.DataSheet.in