Global LCD Panel Exchange Center www.panelook.com 屏库:全球液晶屏交易中心

SPECIFICATION
FOR
APPROVAL

( ) **Preliminary Specification**
(◆) **Final Specification**

Title	17.3” FHD TFT LCD

Customer	Fujitsu
MODEL	

SUPPLIER	LG Display Co., Ltd.
*MODEL	LP173WF1
Suffix	TLA2

*When you obtain standard approval,
please use the above model name without suffix

APPROVED BY	SIGNATURE
/	
/	
/	

Please return 1 copy for your confirmation with your signature and comments.

APPROVED BY	SIGNATURE
S. R. Kim / S.Manager	
REVIEWED BY	
M. J. Lee / Manager	
PREPARED BY	
J. P. Lee / Engineer B. H. Kim / Engineer	

Products Engineering Dept.
LG Display Co., Ltd

One step solution for LCD / PDP / OLED panel application: Datasheet, inventory and accessory! www.panelook.com

Global LCD Panel Exchange Center www.panelook.com 屏库:全球液晶屏交易中心

Contents

No	ITEM	Page
	COVER	1
	CONTENTS	2
	RECORD OF REVISIONS	3
1	GENERAL DESCRIPTION	4
2	ABSOLUTE MAXIMUM RATINGS	5
3	ELECTRICAL SPECIFICATIONS	
3-1	ELECTRICAL CHARACTREISTICS	6
3-2	INTERFACE CONNECTIONS	8
3-3	LVDS SIGNAL TIMING SPECIFICATION	9
3-4	SIGNAL TIMING SPECIFICATIONS	11
3-5	SIGNAL TIMING WAVEFORMS	11
3-6	COLOR INPUT DATA REFERNECE	12
3-7	POWER SEQUENCE	13
4	OPTICAL SFECIFICATIONS	14
5	MECHANICAL CHARACTERISTICS	17
6	RELIABLITY	24
7	INTERNATIONAL STANDARDS	
7-1	SAFETY	25
8	PACKING	
8-1	DESIGNATION OF LOT MARK	26
8-2	PACKING FORM	26
8-3	Label Description	27
9	PRECAUTIONS	28-29
A	APPENDIX. Enhanced Extended Display Identification Data	30-32

www.panelook.com

One step solution for LCD / PDP / OLED panel application: Datasheet, inventory and accessory! www.panelook.com

Global LCD Panel Exchange Center www.panelook.com 屏库:全球液晶屏交易中心

RECORD OF REVISIONS

Revision No	Revision Date	Page	Description	EDID ver
0.0	04. Oct, 2011	-	First Draft (Preliminary Specification)	0.0
1.0	06. Feb, 2012	-	Final Specification	1.0

One step solution for LCD / PDP / OLED panel application: Datasheet, inventory and accessory! www.panelook.com

Global LCD Panel Exchange Center www.panelook.com 屏库:全球液晶屏交易中心

1. General Description

The LP173WF1 is a Color Active Matrix Liquid Crystal Display with an integral LED backlight system. The matrix employs a-Si Thin Film Transistor as the active element. It is a transmissive type display operating in the normally white mode. This TFT-LCD has 17.3 inches diagonally measured active display area with FHD resolution(1080 vertical by 1920 horizontal pixel array). Each pixel is divided into Red, Green and Blue sub-pixels or dots which are arranged in vertical stripes. Gray scale or the brightness of the sub-pixel color is determined with a 6-bit gray scale signal for each dot, thus, presenting a palette of more than 262,144 colors. The LP173WF1 has been designed to apply the interface method that enables low power, high speed, low EMI. The LP173WF1 is intended to support applications where thin thickness, low power are critical factors and graphic displays are important. In combination with the vertical arrangement of the sub-pixels, the LP173WF1 characteristics provide an excellent flat display for office automation products such as Notebook PC.

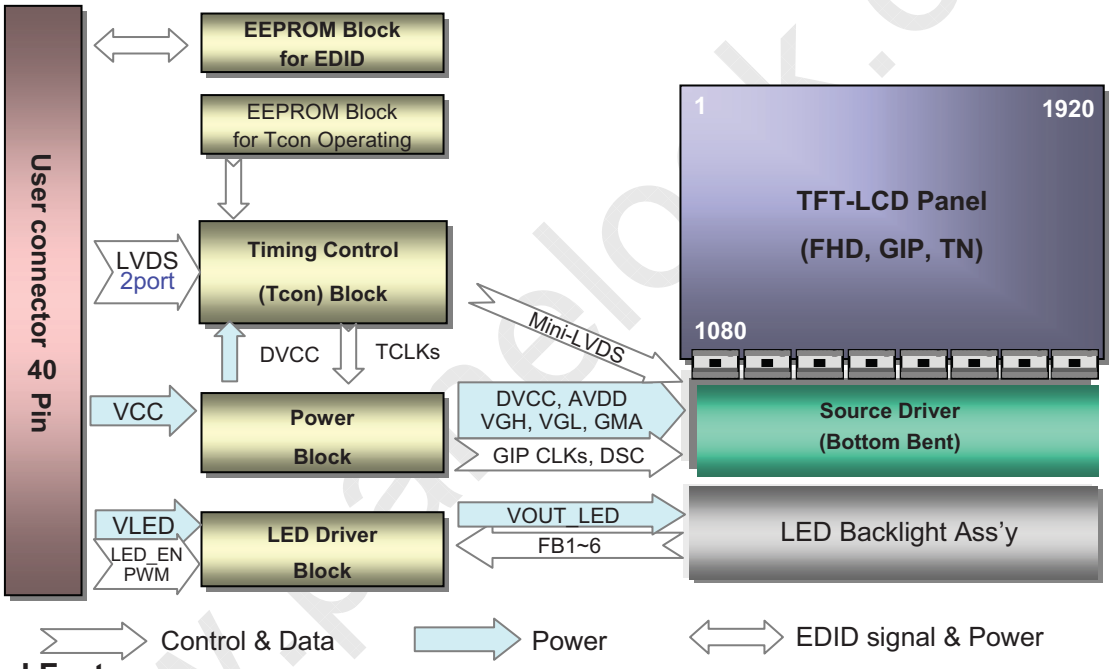

General Features

Active Screen Size	17.3 inches diagonal
Outline Dimension	398.1(H, Typ.) × 232.8(V, Typ.) × 6.0(D, Max.) mm
Pixel Pitch	0.1989 mm x 0.1989mm
Pixel Format	1920 horiz. By 1080 vert. Pixels RGB strip arrangement
Color Depth	6-bit, 262,144 colors
Luminance, White	300 cd/m^2(Typ.5 point)
Power Consumption	Total 8.5W(Typ.) Logic : 2.0W (Typ.@ Mosaic), B/L : 6.5W (Typ.@ VLED 12V)
Weight	630g (Max.)
Display Operating Mode	Transmissive mode, normally white
Surface Treatment	Glare treatment of the front polarizer
RoHS Comply	Yes
BFR / PVC / As Free	Yes for All

One step solution for LCD / PDP / OLED panel application: Datasheet, inventory and accessory! www.panelook.com

Global LCD Panel Exchange Center www.panelook.com 屏库:全球液晶屏交易中心

2. Absolute Maximum Ratings

The following are maximum values which, if exceeded, may cause faulty operation or damage to the unit.

Table 1. ABSOLUTE MAXIMUM RATINGS

Parameter	Symbol	Values		Units	Notes
		Min	Max		
Power Input Voltage	VCC	-0.3	4.0	Vdc	at 25 ± 5°C
Operating Temperature	TOP	0	50	°C	1
Storage Temperature	HST	-20	60	°C	1
Operating Ambient Humidity	HOP	10	90	%RH	1
Storage Humidity	HST	10	90	%RH	1

Note : 1. Temperature and relative humidity range are shown in the figure below.
Wet bulb temperature should be 39°C Max, and no condensation of water.

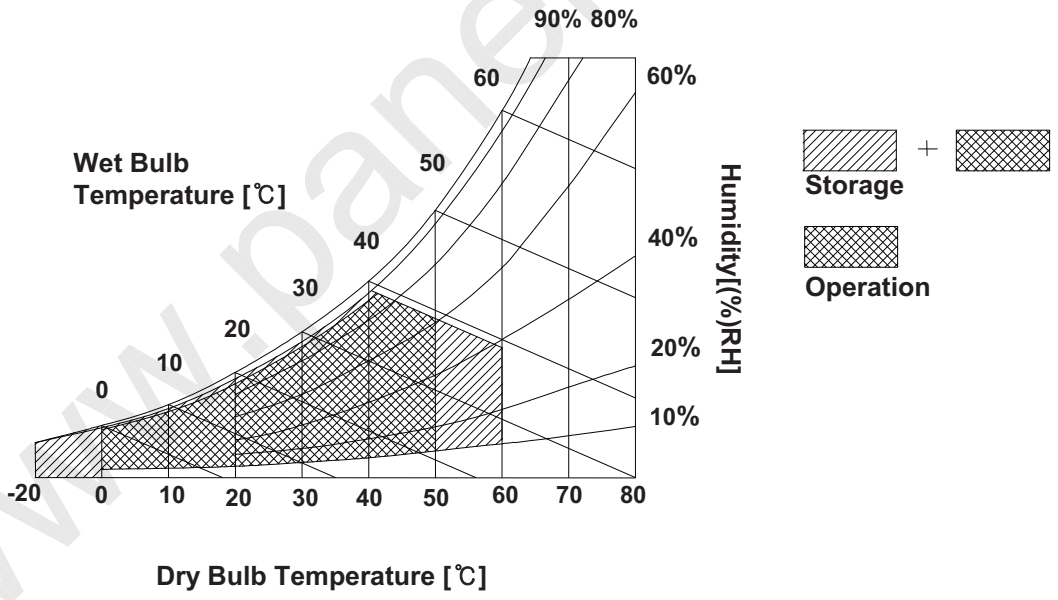

One step solution for LCD / PDP / OLED panel application: Datasheet, inventory and accessory! www.panelook.com

Global LCD Panel Exchange Center www.panelook.com 屏库:全球液晶屏交易中心

3. Electrical Specifications

3-1. Electrical Characteristics

The LP173WF1 requires two power inputs. The first logic is employed to power the LCD electronics and to drive the TFT array and liquid crystal. The second backlight is the input about LED BL with LED Driver.

Table 2. ELECTRICAL CHARACTERISTICS

Parameter		Symbol	Values			Unit	Notes
			Min	Typ	Max		
LOGIC :							
Power Supply Input Voltage		V_{CC}	3.0	3.3	3.6	V	1
Power Supply Input Current	Mosaic	I_{CC}	-	600	680	mA	2
Power Consumption		P_{CC}	-	2.00	2.25	W	2
Power Supply Inrush Current		I_{CC_P}	-	-	1500	mA	3
LVDS Impedance		Z_{LVDS}	90	100	110	Ω	5
BACKLIGHT : (with LED Driver)							
LED Power Input Voltage		V_{LED}	7.0	12.0	21.0	V	6
LED Power Input Current		I_{LED}	-	540	565	mA	6
LED Power Consumption		P_{LED}	-	6.48	6.78	W	7
LED Power Inrush Current		I_{LED_P}	-	-	1500	mA	8
PWM Duty Ratio			5	-	100	%	9
PWM Jitter		-	0	-	0.2	%	10
PWM Impedance		Z_{PWM}	20	40	60	kΩ	
PWM Frequency		F_{PWM}	200	-	1000	Hz	11
PWM High Level Voltage		V_{PWM_H}	3.0	-	5.3	V	
PWM Low Level Voltage		V_{PWM_L}	0	-	0.5	V	
LED_EN Impedance		Z_{PWM}	20	40	60	kΩ	
LED_EN High Voltage		$V_{LED_EN_H}$	3.0	-	5.3	V	
LED_EN Low Voltage		$V_{LED_EN_L}$	0	-	0.5	V	
Life Time			12,000	-	-	Hrs	12

One step solution for LCD / PDP / OLED panel application: Datasheet, inventory and accessory! www.panelook.com

Global LCD Panel Exchange Center www.panelook.com 屏库:全球液晶屏交易中心

Note)

1. The measuring position is the connector of LCM and the test conditions are under 25℃, fv = 60Hz, Black pattern.
2. The specified Icc current and power consumption are under the Vcc = 3.3V , 25℃, fv = 60Hz condition and Mosaic pattern.

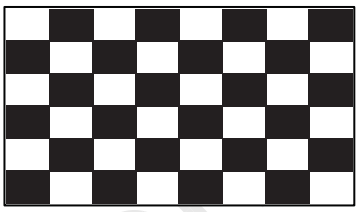

3. This Spec. is the max load condition for the cable impedance designing.
4. The below figures are the measuring Vcc condition and the Vcc control block LGD used. The Vcc condition is same as the minimum of T1 at Power on sequence.

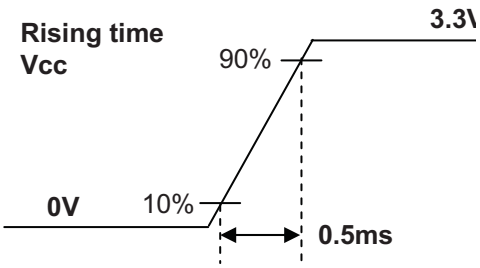

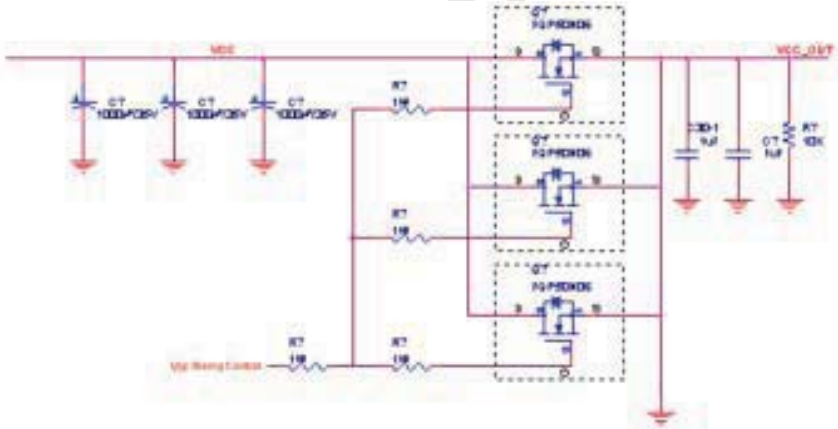

5. This impedance value is needed for proper display and measured form LVDS Tx to the mating connector.
6. The measuring position is the connector of LCM and the test conditions are under 25℃.
7. The current and power consumption with LED Driver are under the Vled = 12.0V , 25℃, Dimming of Max luminance and White pattern with the normal frame frequency operated(60Hz).
8. The below figures are the measuring Vled condition and the Vled control block LGD used. VLED control block is same with Vcc control block.

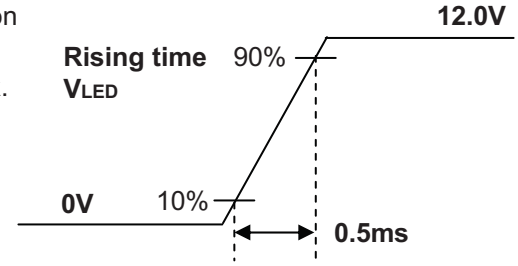

9. The operation of LED Driver below minimum dimming ratio may cause flickering or reliability issue.
10. If Jitter of PWM is bigger than maximum, it may induce flickering.
11. This Spec. is not effective at 100% dimming ratio as an exception because it has DC level equivalent to 0Hz. In spite of acceptable range as defined, the PWM Frequency should be fixed and stable for more consistent brightness control at any specific level desired.
12. The life time is determined as the time at which brightness of LCD is 50% compare to that of minimum value specified in table 7. under general user condition.

One step solution for LCD / PDP / OLED panel application: Datasheet, inventory and accessory! www.panelook.com

Global LCD Panel Exchange Center www.panelook.com 屏库:全球液晶屏交易中心

3-2. Interface Connections

This LCD employs two interface connections, a 40 pin connector is used for the module electronics interface and the other connector is used for the integral backlight system.

Table 3. MODULE CONNECTOR PIN CONFIGURATION (CN1)

Pin	Symbol	Description	Notes
1	NC	No Connection	**[Interface Chip]** 1. LCD : SiW, SW0617 (LCD Controller) Including LVDS Receiver. 2. System : SiW LVDS Rx or equivalent * Pin to Pin compatible with LVDS **[Connector]** Hirose KN38A-40S-0.5H or equivalent **[Mating Connector]** 20345-#40E-## series or equivalent **[Connector pin arrangement]** 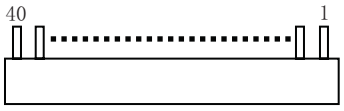 [LCD Module Rear View]
2	VCC	LCD Logic and driver power (3.3V Typ.)	
3	VCC	LCD Logic and driver power (3.3V Typ.)	
4	V EEDID	DDC Power (3.3V)	
5	NC	No Connection	
6	Clk EEDID	DDC Clock	
7	DATA EEDID	DDC Data	
8	ORX0-	Negative LVDS differential data input	
9	ORX0+	Positive LVDS differential data input	
10	GND	LCM Ground	
11	ORX1-	Negative LVDS differential data input	
12	ORX1+	Positive LVDS differential data input	
13	GND	LCM Ground	
14	ORX2-	Negative LVDS differential data input	
15	ORX2+	Positive LVDS differential data input	
16	GND	LCM Ground	
17	ORXC-	Negative LVDS differential clock input	
18	ORXC+	Positive LVDS differential clock input	
19	GND	LCM Ground	
20	ERX0-	Negative LVDS differential data input	
21	ERX0+	Positive LVDS differential data input	
19	GND	LCM Ground	
23	ERX1-	Negative LVDS differential data input	
24	ERX1+	Positive LVDS differential data input	
19	GND	LCM Ground	
26	ERX2-	Negative LVDS differential data input	
27	ERX2+	Positive LVDS differential data input	
19	GND	LCM Ground	
29	ERXC-	Negative LVDS differential clock input	
30	ERXC+	Positive LVDS differential clock input	
31	GND	LCM Ground (LED Backlight Ground)	
32	GND	LCM Ground (LED Backlight Ground)	
33	GND	LCM Ground (LED Backlight Ground)	
34	NC	No Connection	
35	PWM	System PWM Signal input for dimming	
36	LED_EN	LED Backlight On/Off	
37	NC	No Connection	
38	VLED	LED Backlight Power (7V-21V)	
39	VLED	LED Backlight Power (7V-21V)	
40	VLED	LED Backlight Power (7V-21V)	

One step solution for LCD / PDP / OLED panel application: Datasheet, inventory and accessory! www.panelook.com

Global LCD Panel Exchange Center www.panelook.com 屏库:全球液晶屏交易中心

3-3. LVDS Signal Timing Specifications

3-3-1. DC Specification

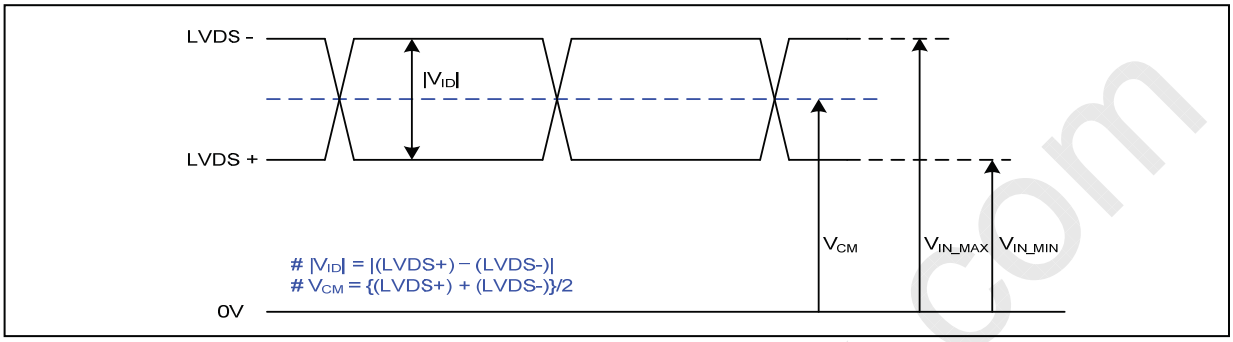

Description	Symbol	Min	Max	Unit	Notes
LVDS Differential Voltage	$\|V_{ID}\|$	100	600	mV	-
LVDS Common mode Voltage	V_{CM}	0.6	1.8	V	-
LVDS Input Voltage Range	V_{IN}	0.3	2.1	V	-

3-3-2. AC Specification

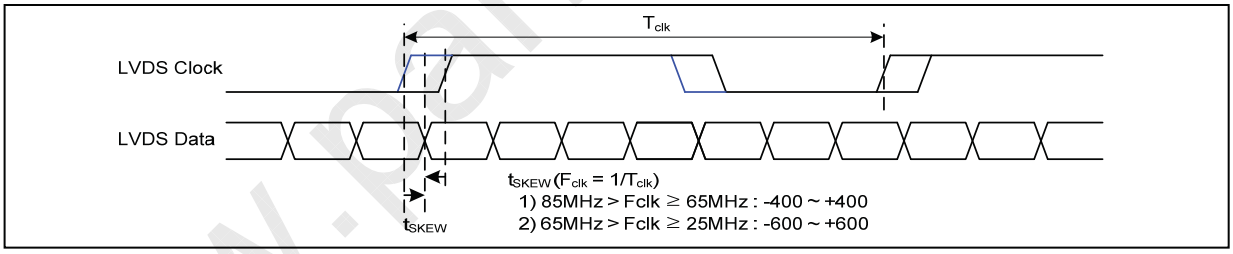

Description	Symbol	Min	Max	Unit	Notes
LVDS Clock to Data Skew Margin	t_{SKEW}	- 400	+ 400	ps	85MHz > Fclk ≥ 65MHz
	t_{SKEW}	- 600	+ 600	ps	65MHz > Fclk ≥ 25MHz
LVDS Clock to Clock Skew Margin (Even to Odd)	t_{SKEW_EO}	- 1/7	+ 1/7	T_{clk}	-
Maximum deviation of input clock frequency during SSC	F_{DEV}	-	± 3	%	-
Maximum modulation frequency of input clock during SSC	F_{MOD}	-	200	KHz	-

One step solution for LCD / PDP / OLED panel application: Datasheet, inventory and accessory! www.panelook.com

Global LCD Panel Exchange Center www.panelook.com 屏库:全球液晶屏交易中心

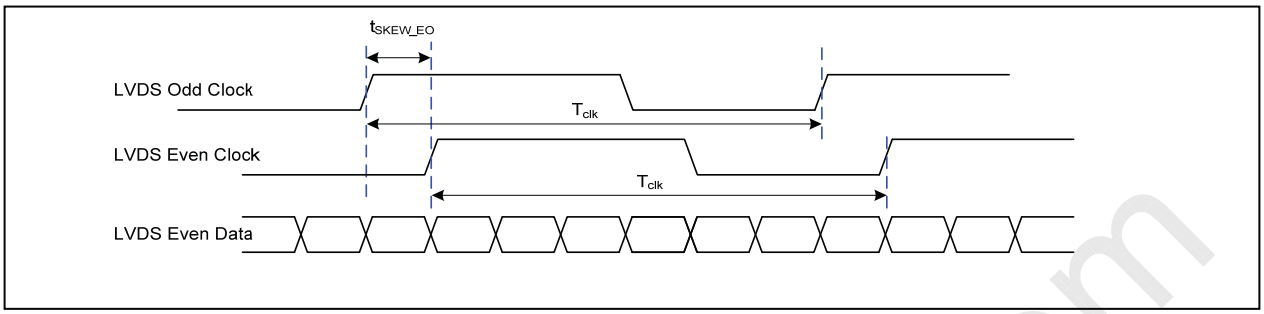

< Clock skew margin between channel >

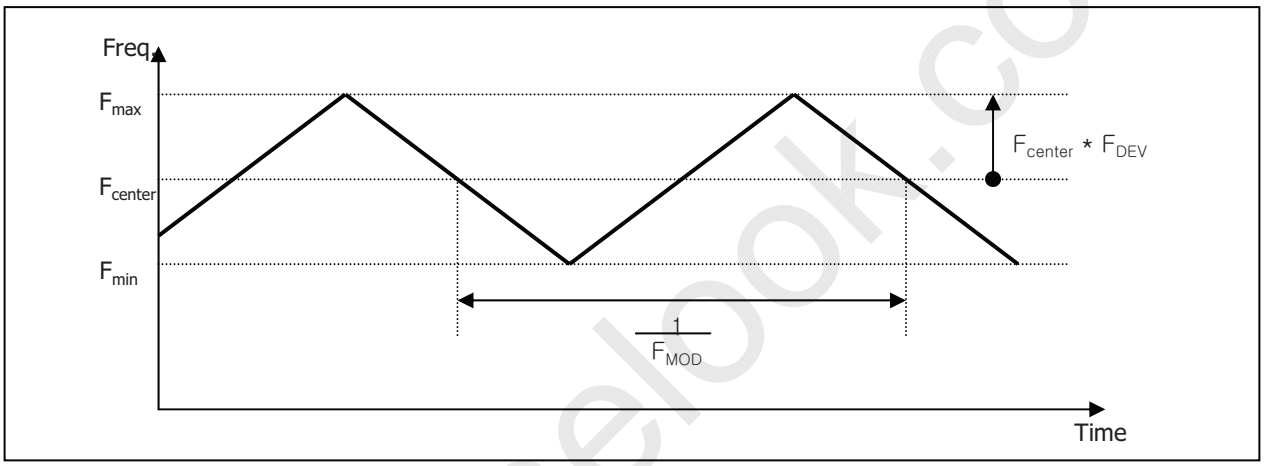

< Spread Spectrum >

3-3-3. Data Format

1) LVDS 2 Port

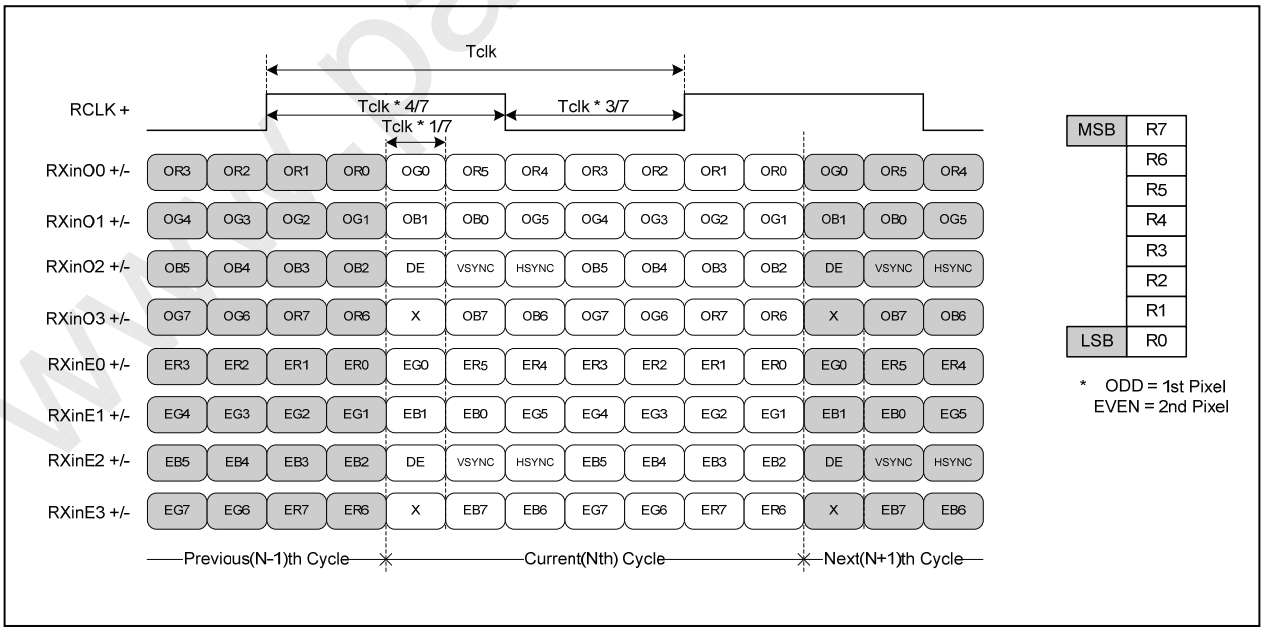

< LVDS Data Format >

One step solution for LCD / PDP / OLED panel application: Datasheet, inventory and accessory! www.panelook.com

Global LCD Panel Exchange Center www.panelook.com 屏库:全球液晶屏交易中心

3-4. Signal Timing Specifications

This is the signal timing required at the input of the User connector. All of the interface signal timing should be satisfied with the following specifications and specifications of LVDS Tx/Rx for its proper operation.

Table 4. TIMING TABLE

ITEM	Symbol		Min	Typ	Max	Unit	Note
DCLK	Frequency	f_{CLK}	-	149.8	-	MHz	
Hsync	Period	t_{HP}	2172	2276	2380	tCLK	
	Width	t_{WH}	64	96	112		
	Width-Active	t_{WHA}	1920	1920	1920		
Vsync	Period	t_{VP}	1093	1097	1101	tHP	
	Width	t_{WV}	2	3	4		
	Width-Active	t_{WVA}	1080	1080	1080		
Data Enable	Horizontal back porch	t_{HBP}	136	196	268	tCLK	
	Horizontal front porch	t_{HFP}	52	64	80		
	Vertical back porch	t_{VBP}	10	12	14	tHP	
	Vertical front porch	t_{VFP}	1	2	3		

3-5. Signal Timing Waveforms

Condition : VCC =3.3V

Data Enable, Hsync, Vsync

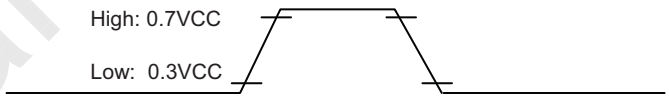

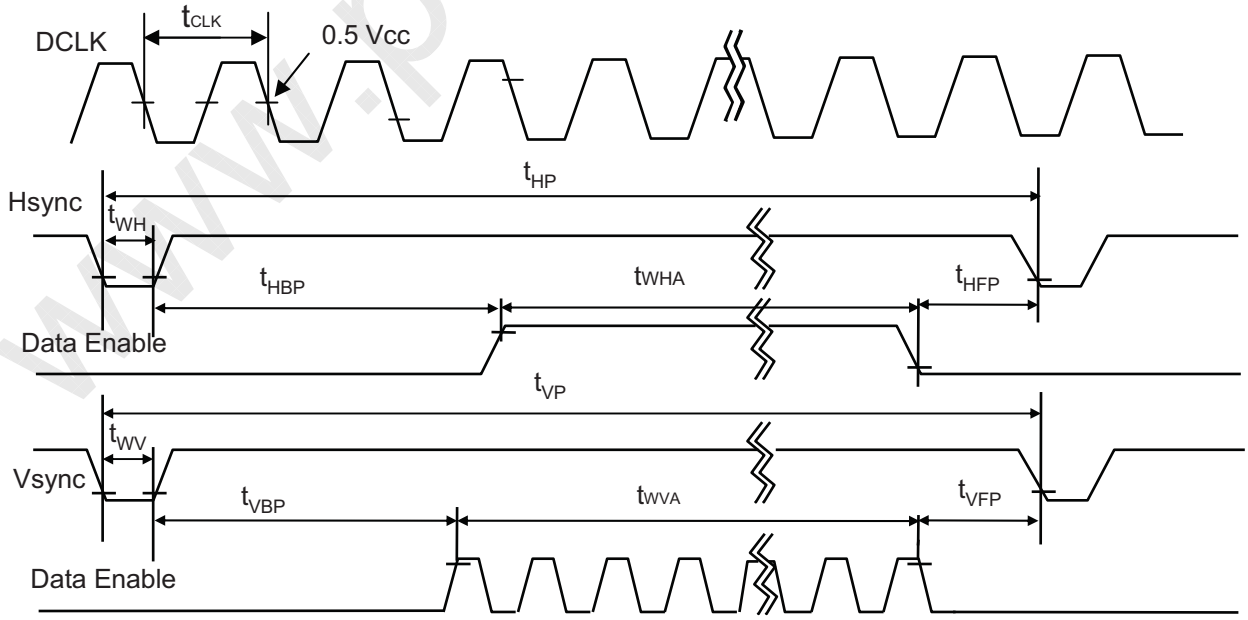

One step solution for LCD / PDP / OLED panel application: Datasheet, inventory and accessory! www.panelook.com

Global LCD Panel Exchange Center www.panelook.com 屏库:全球液晶屏交易中心

3-6. Color Input Data Reference

The brightness of each primary color (red,green and blue) is based on the 6-bit gray scale data input for the color ; the higher the binary input, the brighter the color. The table below provides a reference for color versus data input.

Table 5. COLOR DATA REFERENCE

Color		Input Color Data																	
		RED						GREEN						BLUE					
		MSB					LSB	MSB					LSB	MSB					LSB
		R 5	R 4	R 3	R 2	R 1	R 0	G 5	G 4	G 3	G 2	G 1	G 0	B 5	B 4	B 3	B 2	B 1	B 0
Basic Color	Black	0	0	0	0	0	0	0	0	0	0	0	0	0	0	0	0	0	0
	Red	1	1	1	1	1	1	0	0	0	0	0	0	0	0	0	0	0	0
	Green	0	0	0	0	0	0	1	1	1	1	1	1	0	0	0	0	0	0
	Blue	0	0	0	0	0	0	0	0	0	0	0	0	1	1	1	1	1	1
	Cyan	0	0	0	0	0	0	1	1	1	1	1	1	1	1	1	1	1	1
	Magenta	1	1	1	1	1	1	0	0	0	0	0	0	1	1	1	1	1	1
	Yellow	1	1	1	1	1	1	1	1	1	1	1	1	0	0	0	0	0	0
	White	1	1	1	1	1	1	1	1	1	1	1	1	1	1	1	1	1	1
RED	RED (00)	0	0	0	0	0	0	0	0	0	0	0	0	0	0	0	0	0	0
	RED (01)	0	0	0	0	0	1	0	0	0	0	0	0	0	0	0	0	0	0
	…			…						…						…			
	RED (62)	1	1	1	1	1	0	0	0	0	0	0	0	0	0	0	0	0	0
	RED (63)	1	1	1	1	1	1	0	0	0	0	0	0	0	0	0	0	0	0
GREEN	GREEN (00)	0	0	0	0	0	0	0	0	0	0	0	0	0	0	0	0	0	0
	GREEN (01)	0	0	0	0	0	0	0	0	0	0	0	1	0	0	0	0	0	0
	…			…						…						…			
	GREEN (62)	0	0	0	0	0	0	1	1	1	1	1	0	0	0	0	0	0	0
	GREEN (63)	0	0	0	0	0	0	1	1	1	1	1	1	0	0	0	0	0	0
BLUE	BLUE (00)	0	0	0	0	0	0	0	0	0	0	0	0	0	0	0	0	0	0
	BLUE (01)	0	0	0	0	0	0	0	0	0	0	0	0	0	0	0	0	0	1
	…			…						…						…			
	BLUE (62)	0	0	0	0	0	0	0	0	0	0	0	0	1	1	1	1	1	0
	BLUE (63)	0	0	0	0	0	0	0	0	0	0	0	0	1	1	1	1	1	1

One step solution for LCD / PDP / OLED panel application: Datasheet, inventory and accessory! www.panelook.com

Global LCD Panel Exchange Center www.panelook.com 屏库:全球液晶屏交易中心

3-7. Power Sequence

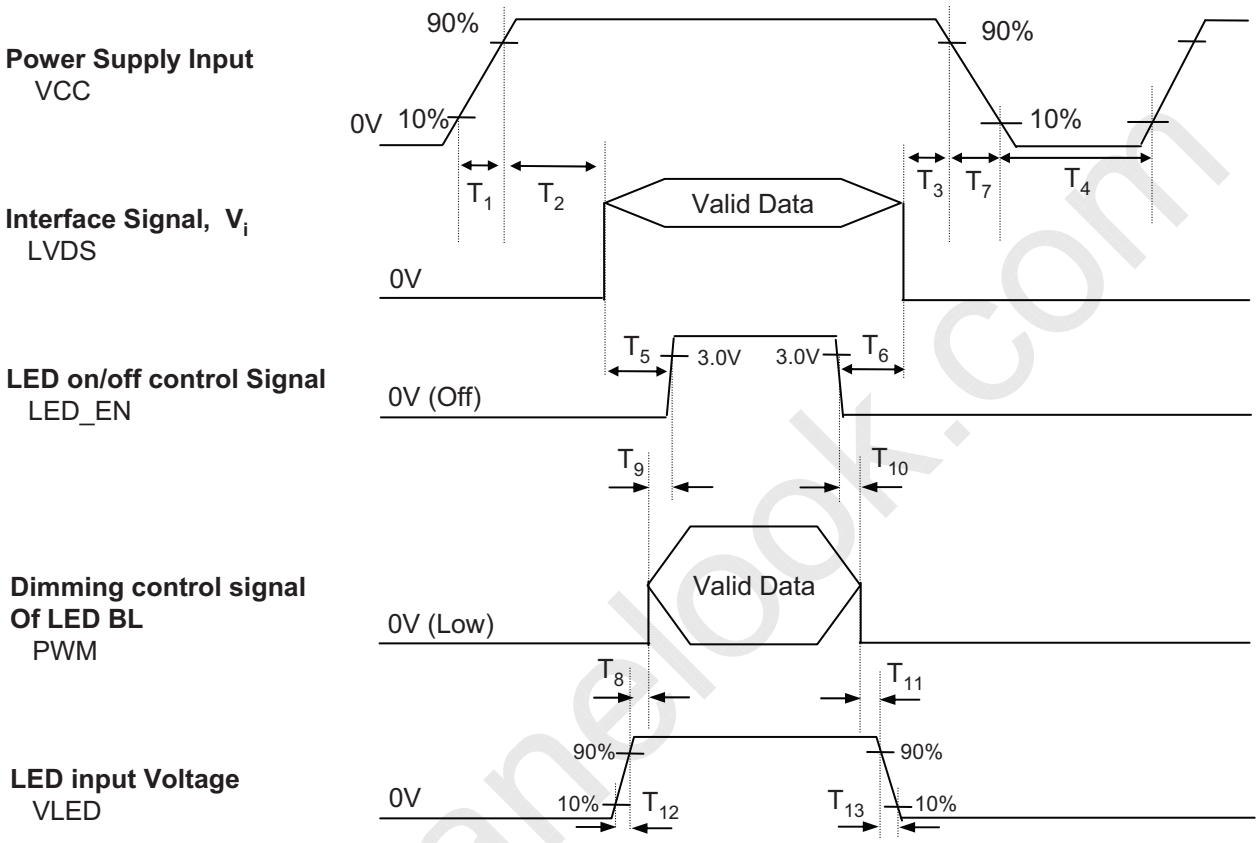

Table 6. POWER SEQUENCE TABLE

Logic Parameter	Value			Units	LED Parameter	Value			Units
	Min.	Typ.	Max.			Min.	Typ.	Max.	
T_1	0.5	-	10	ms	T_8	10	-	-	ms
T_2	0	-	50	ms	T_9	0	-	-	ms
T_3	0	-	50	ms	T_{10}	0	-	-	ms
T_4	400	-	-	ms	T_{11}	10	-	-	ms
T_5	200	-	-	ms	T_{12}	0.5	-	-	ms
T_6	200	-	-	ms	T_{13}	0	-	5000	ms
T_7	3	-	10	ms					

Note)
1. Do not insert the mating cable when system turn on.
2. Valid Data have to meet "3-3. LVDS Signal Timing Specifications"
3. LVDS, LED_EN and PWM need to be on pull-down condition on invalid status.
4. LGD recommend the rising sequence of VLED after the Vcc and valid status of LVDS turn on.

One step solution for LCD / PDP / OLED panel application: Datasheet, inventory and accessory! www.panelook.com

Global LCD Panel Exchange Center www.panelook.com 屏库:全球液晶屏交易中心

4. Optical Specification

Optical characteristics are determined after the unit has been 'ON' and stable for approximately 30 minutes in a dark environment at 25°C. The values specified are at an approximate distance 50cm from the LCD surface at a viewing angle of Φ and Θ equal to 0°.
FIG. 1 presents additional information concerning the measurement equipment and method.

FIG. 1 Optical Characteristic Measurement Equipment and Method

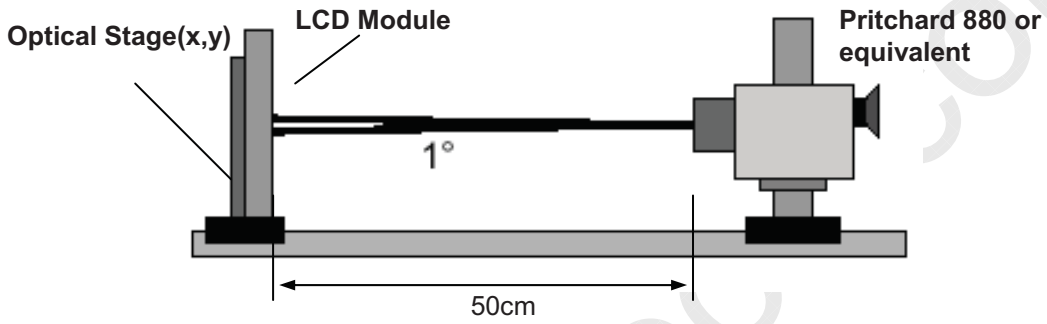

Table 8. OPTICAL CHARACTERISTICS

Ta=25°C, VCC=3.3V, fv=60Hz, f_{CLK}= 149.8MHz

Parameter	Symbol	Values			Units	Notes
		Min	Typ	Max		
Contrast Ratio	CR	500	-	-		1
Surface Luminance, white	L_{WH}	255	300	-	cd/m²	2
Luminance Variation	δ_{WHITE}	-	1.4	1.6		3
Response Time	$Tr_R + Tr_D$	-	8	16	ms	4
Color Coordinates						
RED	RX	0.610	0.640	0.670		
	RY	0.305	0.335	0.365		
GREEN	GX	0.290	0.320	0.350		
	GY	0.580	0.630	0.660		
BLUE	BX	0.120	0.150	0.180		
	BY	0.030	0.060	0.090		
WHITE	WX	0.283	0.313	0.343		
	WY	0.299	0.329	0.359		
Viewing Angle						5
x axis, right(Φ=0°)	Θr	60	-	-	degree	
x axis, left (Φ=180°)	Θl	60	-	-	degree	
y axis, up (Φ=90°)	Θu	50	-	-	degree	
y axis, down (Φ=270°)	Θd	50	-	-	degree	
Color Gamut	C/G	65	72	-	%	
Gray Scale						6

One step solution for LCD / PDP / OLED panel application: Datasheet, inventory and accessory! www.panelook.com

Global LCD Panel Exchange Center www.panelook.com 屏库:全球液晶屏交易中心

Note)

1. Contrast Ratio(CR) is defined mathematically as

$$\text{Contrast Ratio} = \frac{\text{Surface Luminance with all white pixels}}{\text{Surface Luminance with all black pixels}}$$

2. Surface luminance is the average of 5 point across the LCD surface 50cm from the surface with all pixels displaying white. For more information see FIG 1.

$$L_{WH} = \text{Average}(L_1, L_2, \ldots L_5)$$

3. The variation in surface luminance , The panel total variation (δ_{WHITE}) is determined by measuring L_N at each test position 1 through 13 and then defined as followed numerical formula. For more information see FIG 2.

$$\delta_{WHITE} = \frac{\text{Maximum}(L_1, L_2, \ldots L_{13})}{\text{Minimum}(L_1, L_2, \ldots L_{13})}$$

4. Response time is the time required for the display to transition from white to black (rise time, Tr_R) and from black to white(Decay Time, Tr_D). For additional information see FIG 3.

5. Viewing angle is the angle at which the contrast ratio is greater than 10. The angles are determined for the horizontal or x axis and the vertical or y axis with respect to the z axis which is normal to the LCD surface. For more information see FIG 4.

6. Gray scale specification

* f_V = 60Hz

Gray Level	Luminance [%] (Typ)
L0	0.11
L7	1.20
L15	5.23
L23	11.8
L31	20.6
L39	34.6
L47	53.3
L55	75.8
L63	100

One step solution for LCD / PDP / OLED panel application: Datasheet, inventory and accessory! www.panelook.com

Global LCD Panel Exchange Center www.panelook.com 屏库:全球液晶屏交易中心

FIG. 2 Luminance

<Measuring point for Average Luminance & measuring point for Luminance variation>

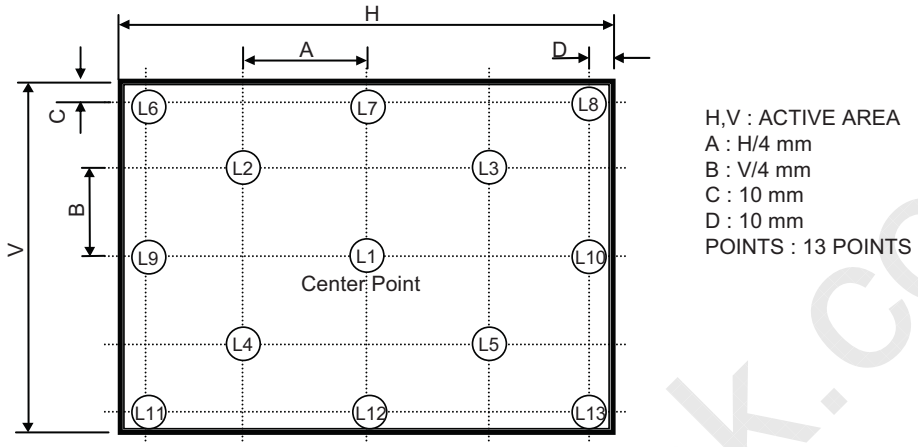

FIG. 3 Response Time

The response time is defined as the following figure and shall be measured by switching the input signal for “black” and “white”.

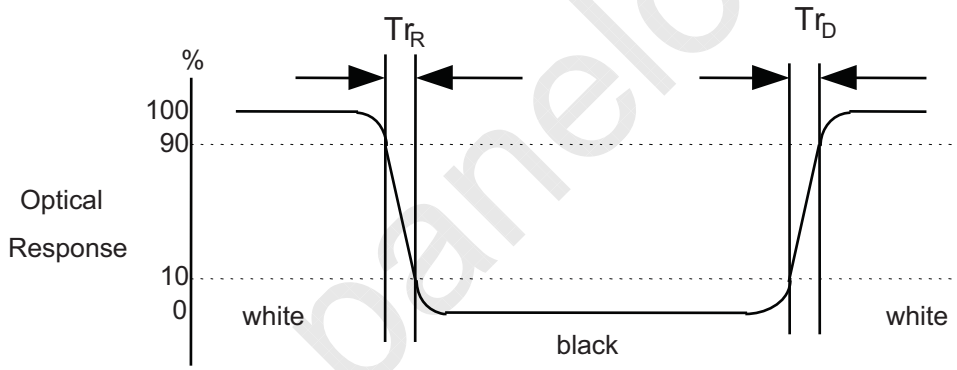

FIG. 4 Viewing angle

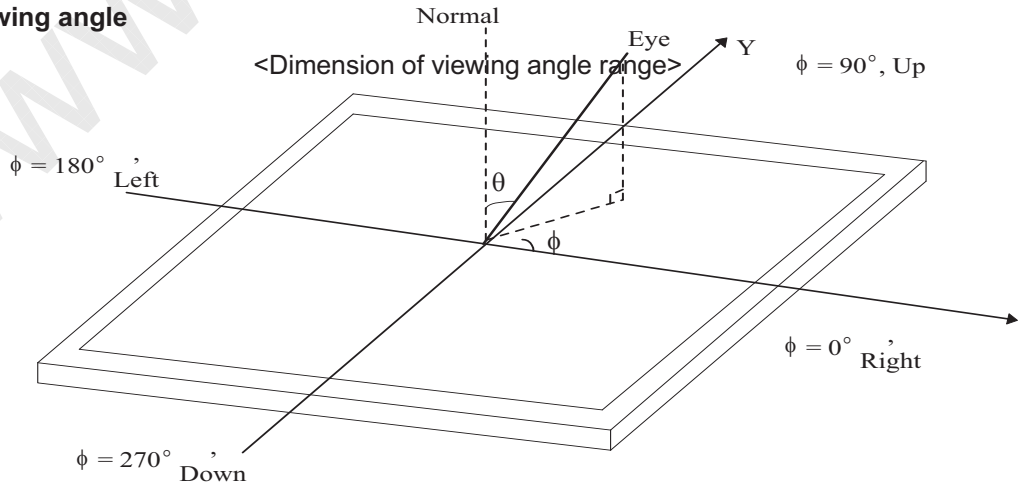

One step solution for LCD / PDP / OLED panel application: Datasheet, inventory and accessory! www.panelook.com

Global LCD Panel Exchange Center www.panelook.com 屏库:全球液晶屏交易中心

5. Mechanical Characteristics

The contents provide general mechanical characteristics for the model LP173WF1.
In addition the figures in the next page are detailed mechanical drawing of the LCD.

Outline Dimension	Horizontal	398.1 ± 0.50mm
	Vertical	232.8 ± 0.50mm
	Depth	6.0mm(Max.)
Bezel Area	Horizontal	1.5mm Min.(Lager than Active Display Area)
	Vertical	1.5mm Min.(Lager than Active Display Area)
Active Display Area	Horizontal	381.888mm
	Vertical	214.812 mm
Weight	630g (Max.)	
Surface Treatment	Glare treatment of the front polarizer	

www.panelook.com

One step solution for LCD / PDP / OLED panel application: Datasheet, inventory and accessory! www.panelook.com

Global LCD Panel Exchange Center www.panelook.com 屏库:全球液晶屏交易中心

<FRONT VIEW>

Note) Unit:[mm], General tolerance: ± 0.5mm

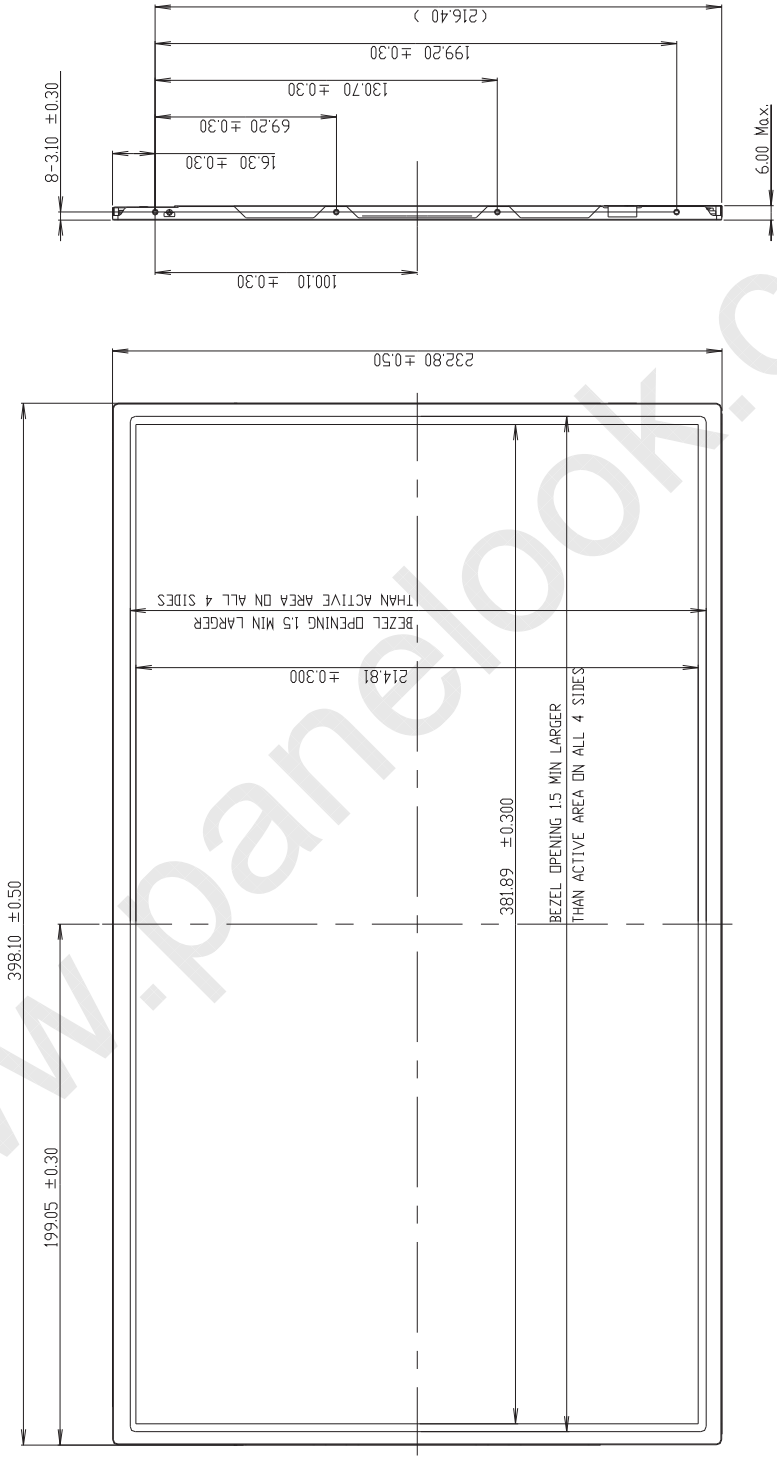

www.panelook.com
One step solution for LCD / PDP / OLED panel application: Datasheet, inventory and accessory! www.panelook.com

Global LCD Panel Exchange Center www.panelook.com 屏库:全球液晶屏交易中心

<REAR VIEW>

Note) Unit:[mm], General tolerance: ± 0.5mm

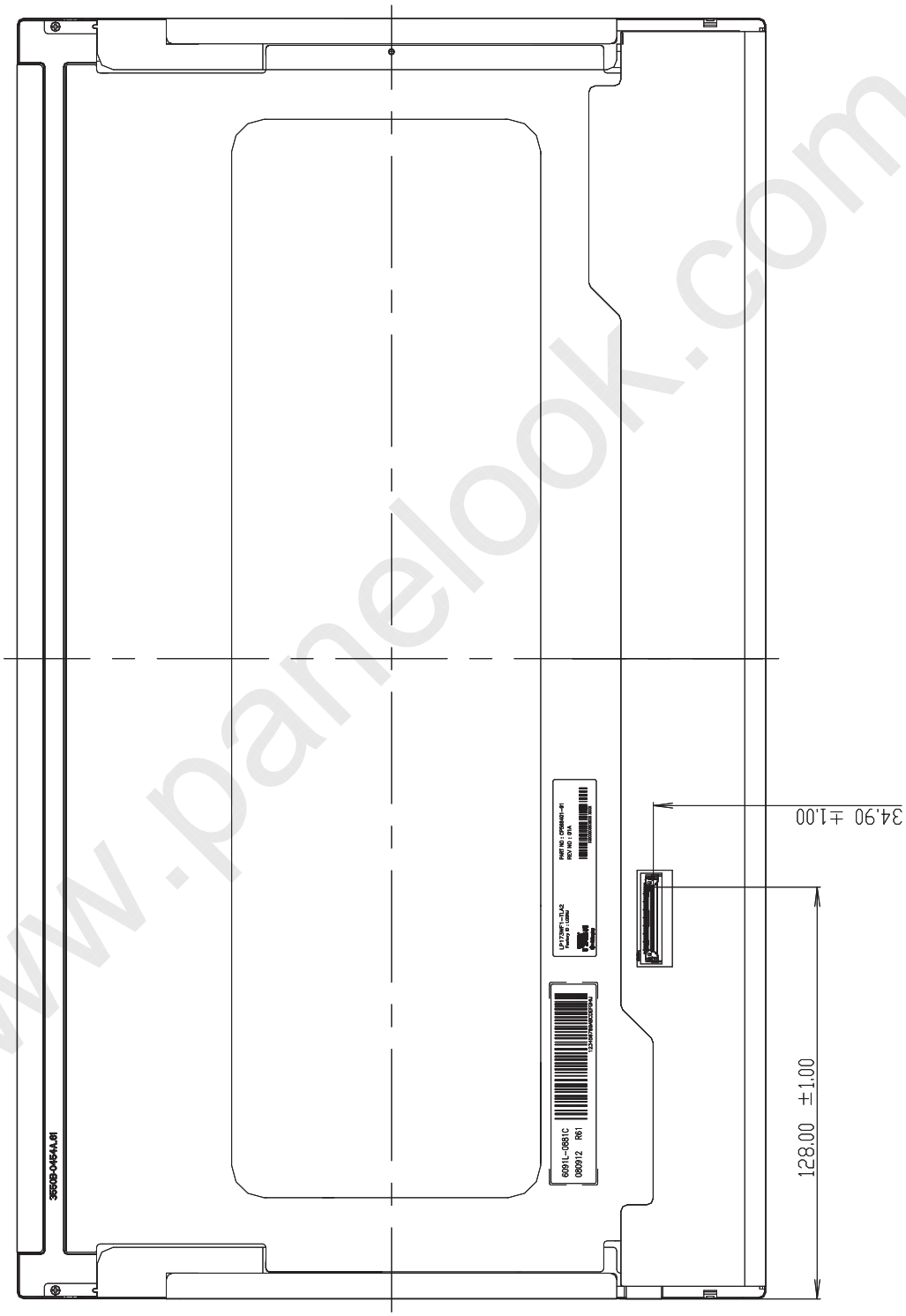

One step solution for LCD / PDP / OLED panel application: Datasheet, inventory and accessory! www.panelook.com

Global LCD Panel Exchange Center www.panelook.com 屏库:全球液晶屏交易中心

[DETAIL DESCRIPTION OF SIDE MOUNTING SCREW]

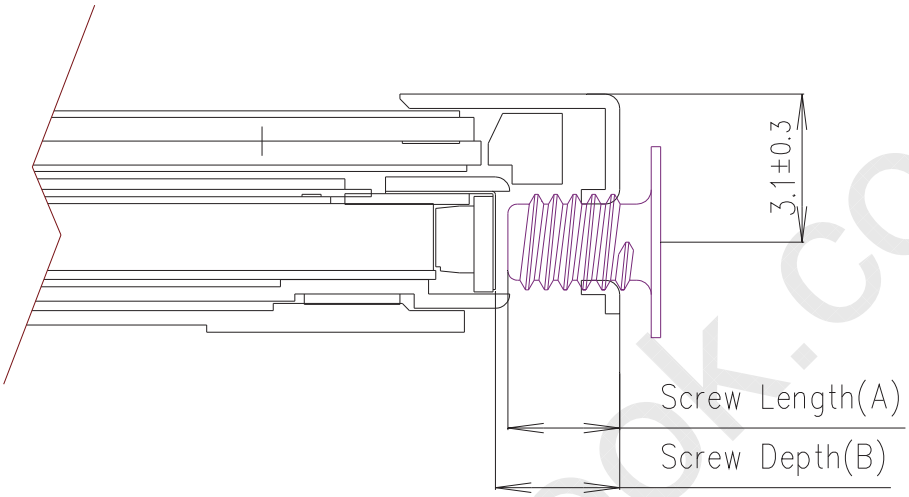

* Mounting Screw Length (A)
  = 2.0(Min) / 2.5(Max)
* Mounting Screw Hole Depth (B)
  = 2.5(Min)
* Mounting hole location : 3.1(Typ)
* Torque : 2.0 kgf.cm(Max)
  (Measurement gauge : torque meter)

Notes : 1. Screw plated through the method of non-electrolytic nickel plating is preferred to reduce possibility that results in vertical and/or horizontal line defect due to the conductive particles from screw surface.

One step solution for LCD / PDP / OLED panel application: Datasheet, inventory and accessory! www.panelook.com

Global LCD Panel Exchange Center www.panelook.com 屏库:全球液晶屏交易中心

LGD Proposal for system cover design.(Appendix)

1	Gap check for securing the enough gap between LCM and System cover.	

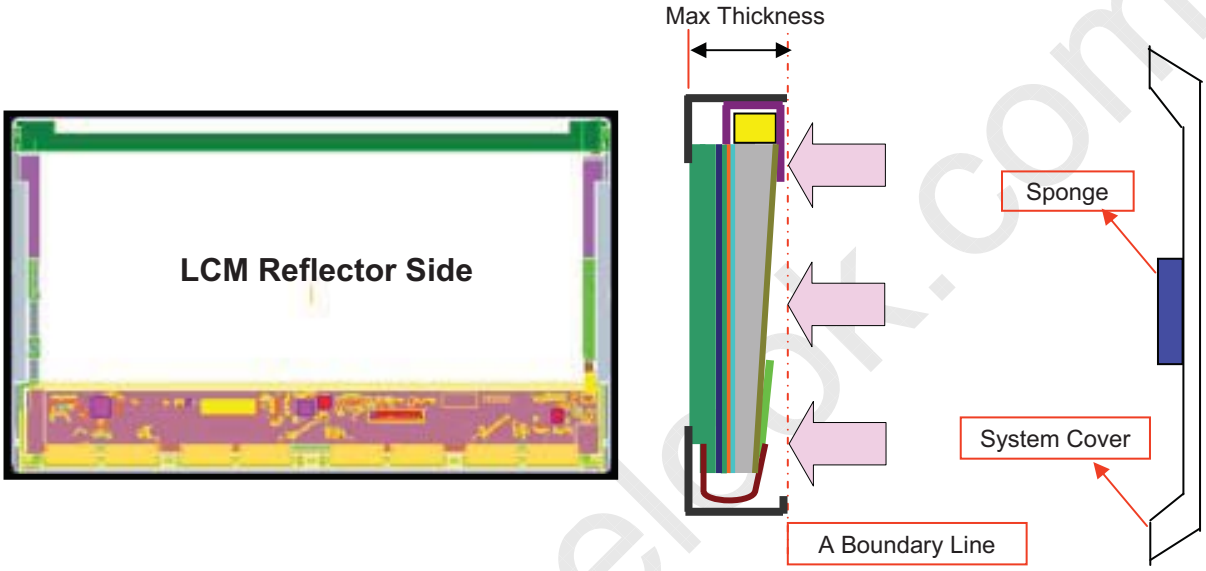

Define	1.Rear side of LCM is sensitive against external stress,and previous check about interference is highly needed. 2.In case there is something from system cover comes into the boundary above,mechanical interference may cause the FOS defects. (Eg:Ripple,White spot..)
2	Check if antenna cable is sufficiently apart from T-CON of LCD Module.
Define	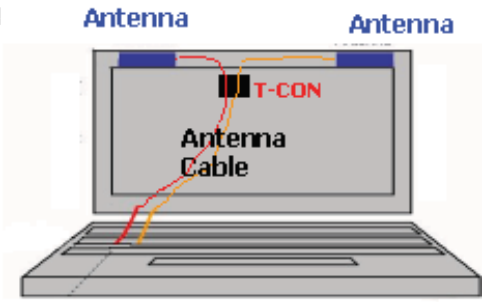 NO GOOD 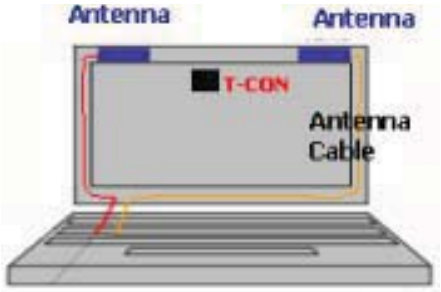 GOOD
	1.If system antenna is overlapped with T-CON,it might be cause the noise.

One step solution for LCD / PDP / OLED panel application: Datasheet, inventory and accessory! www.panelook.com

Global LCD Panel Exchange Center www.panelook.com 屏库:全球液晶屏交易中心

LGD Proposal for system cover design.

3	Gap check for securing the enough gap between LCM and System hinge.	

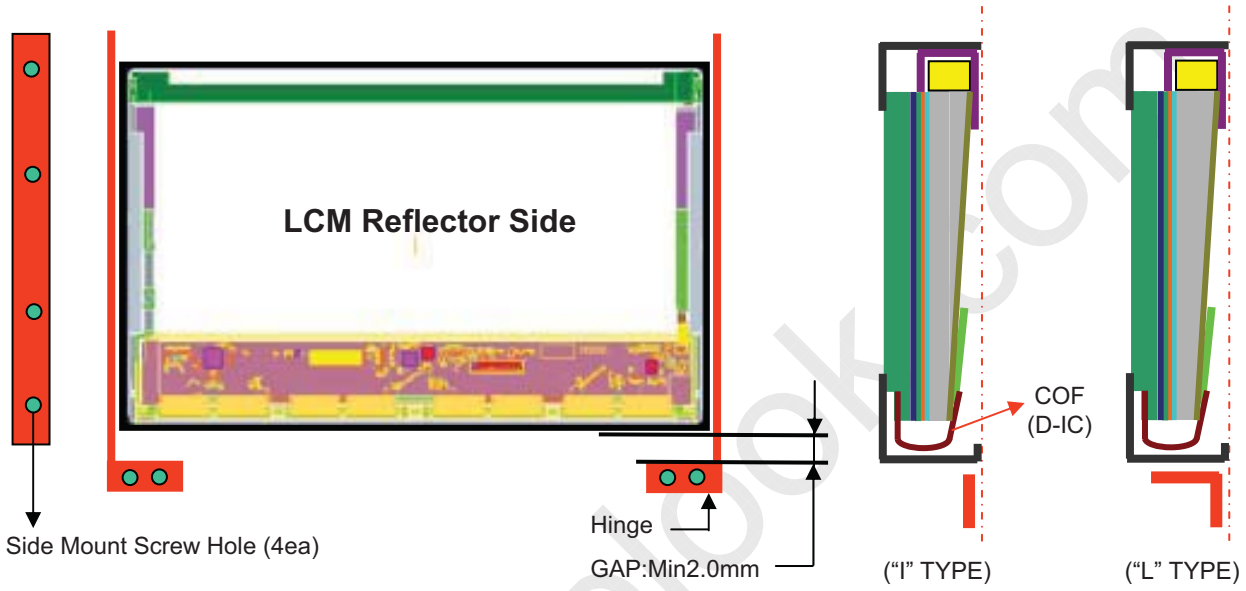

Define	1.At least 2.0mm of gap needs to be secured to prevent the shock related defects. 2."L" type of hinge is recommended than "I" type under shock test.
4	Checking the path of the System wire.

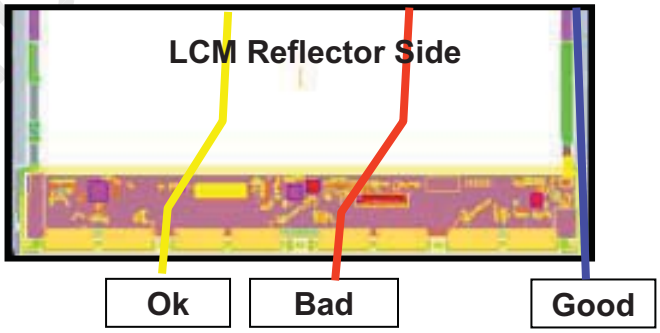

Define	1.COF area needs to be handled with care. 2.GOOD ➔Wire path design to system side. OK➔ Wire path is located between COFs. BAD➔Wire path overlapped with COF area.

One step solution for LCD / PDP / OLED panel application: Datasheet, inventory and accessory! www.panelook.com

Global LCD Panel Exchange Center www.panelook.com 屏库:全球液晶屏交易中心

LGD Proposal for system cover design.

5	Using a bracket on the top of LCM is not recommended.	

bracket

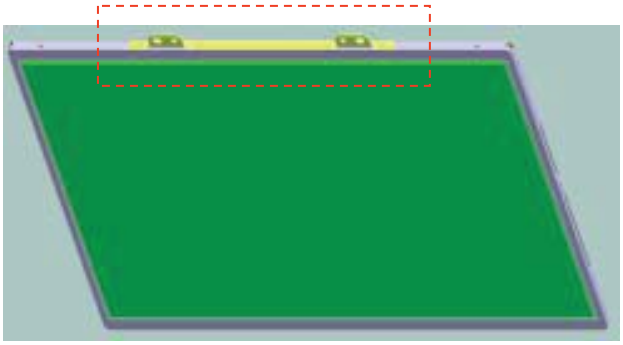

With bracket

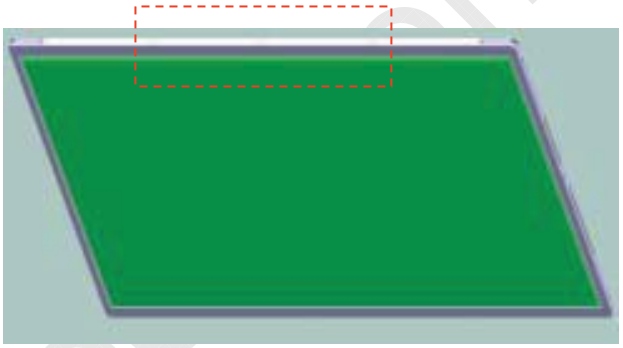

Without bracket

Define	1.Condition without bracket is good for mechanical noise,and can minimize the light leakage from deformation of bracket. 2.The results shows that there is no difference between the condition with or without bracket.
6	Securing additional gap on CNT area..

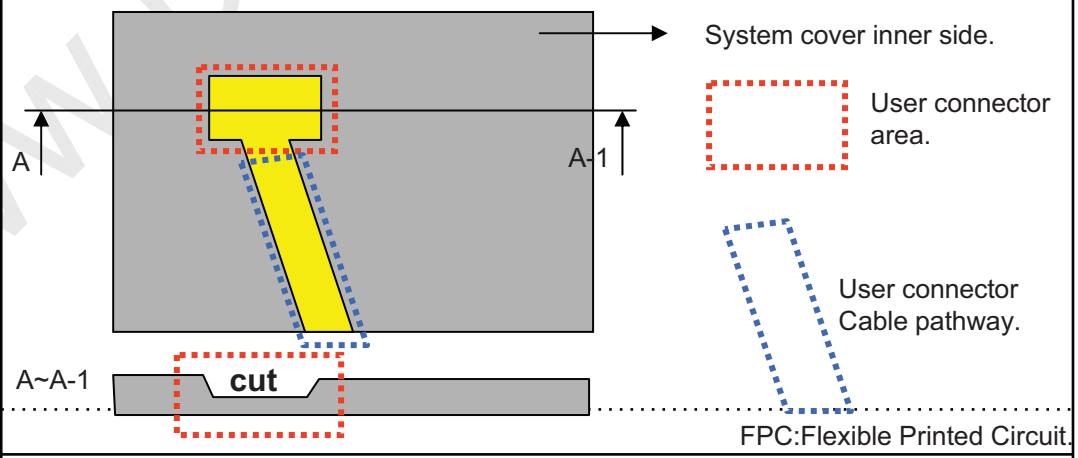

Define	1.CNT area is specially sensitive against external stress,and additional gap by cutting on system cover will be helpful on removing the Ripple. 2.Using a thinner CNT will be better. (eg: FPC type)

One step solution for LCD / PDP / OLED panel application: Datasheet, inventory and accessory! www.panelook.com

Global LCD Panel Exchange Center www.panelook.com 屏库:全球液晶屏交易中心

6. Reliability

Environment test condition

No.	Test Item	Conditions
1	High temperature storage test	Ta= 60°C, 240h
2	Low temperature storage test	Ta= -20°C, 240h
3	High temperature operation test	Ta= 50°C, 50%RH, 240h
4	Low temperature operation test	Ta= 0°C, 240h
5	Vibration test (non-operating)	Sine wave, 10 ~ 500 ~ 10Hz, 1.5G, 0.37oct/min 3 axis, 1hour/axis
6	Shock test (non-operating)	Half sine wave, 180G, 2ms one shock of each six faces(I.e. run 180G 2ms for all six faces)
7	Altitude operating storage / shipment	0 ~ 10,000 feet (3,048m) 24Hr 0 ~ 40,000 feet (12,192m) 24Hr

{ Result Evaluation Criteria }
There should be no change which might affect the practical display function when the display quality test is conducted under normal operating condition.

www.panelook.com

One step solution for LCD / PDP / OLED panel application: Datasheet, inventory and accessory! www.panelook.com

Global LCD Panel Exchange Center www.panelook.com 屏库:全球液晶屏交易中心

7. International Standards

7-1. Safety

a) UL 60950-1, Underwriters Laboratories Inc.
Information Technology Equipment - Safety - Part 1 : General Requirements.

b) CAN/CSA C22.2 No.60950-1-07, Canadian Standards Association.
Information Technology Equipment - Safety - Part 1 : General Requirements.

c) EN 60950-1, European Committee for Electrotechnical Standardization (CENELEC).
Information Technology Equipment - Safety - Part 1 : General Requirements.

d) IEC 60950-1, The International Electrotechnical Commission (IEC).
Information Technology Equipment - Safety - Part 1 : General Requirements.

www.panelook.com

One step solution for LCD / PDP / OLED panel application: Datasheet, inventory and accessory! www.panelook.com

Global LCD Panel Exchange Center www.panelook.com 屏库:全球液晶屏交易中心

8. Packing

8-1. Designation of Lot Mark

a) Lot Mark

A	B	C	D	E	F	G	H	I	J	K	L	M

A,B,C : SIZE(INCH)
E : MONTH
D : YEAR
F ~ M : SERIAL NO.

Note

1. YEAR

Year	2011	2012	2013	2014	2015	2016	2017	2018	2019	2020
Mark	A	B	C	D	E	F	G	H	J	K

2. MONTH

Month	Jan	Feb	Mar	Apr	May	Jun	Jul	Aug	Sep	Oct	Nov	Dec
Mark	1	2	3	4	5	6	7	8	9	A	B	C

b) Location of Lot Mark

Serial No. is printed on the label. The label is attached to the backside of the LCD module.
This is subject to change without prior notice.

8-2. Packing Form

a) Package quantity in one box : 20 pcs

b) Box Size : 478 x 365 x 328

One step solution for LCD / PDP / OLED panel application: Datasheet, inventory and accessory! www.panelook.com

Global LCD Panel Exchange Center www.panelook.com 屏库:全球液晶屏交易中心

8-3. Label Description

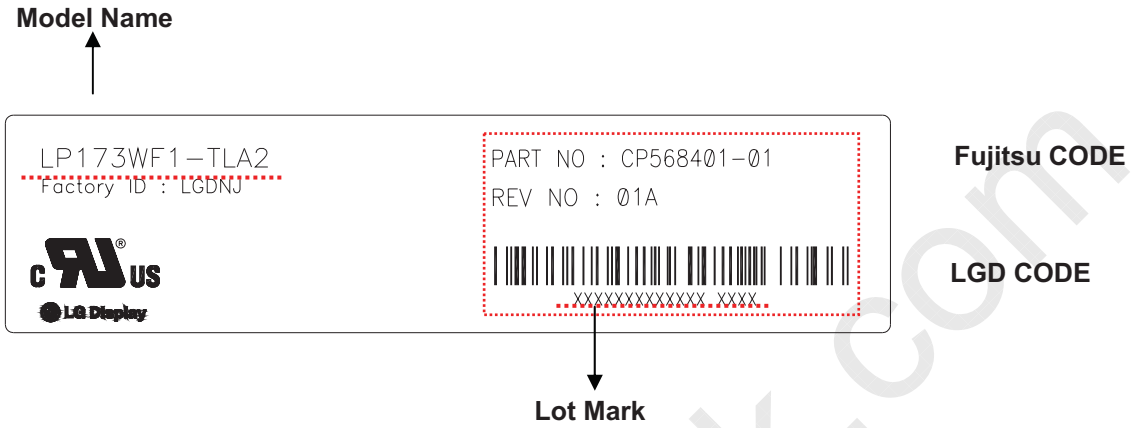

LGD Code

(1) Model Name : **L P 1 7 3 W F 1 - T L A 2**

- Revision Code
- Product Type
- Display Mode
- Basic Model Serial No.
- Resolution : FHD
- Size (inch) : 17.3”
- Application : NBPC
- LGD Brand Initial: L

(2) Lot Mark : **1 7 3 A 9 C 0 0 0 0 0 0 1**

- SERIAL NO.
- MONTH
- YEAR
- SIZE

Fujitsu Code

1)P/N : CP568401-01

2) REV NO : 01A

One step solution for LCD / PDP / OLED panel application: Datasheet, inventory and accessory! www.panelook.com

Global LCD Panel Exchange Center www.panelook.com 屏库:全球液晶屏交易中心

9. PRECAUTIONS

Please pay attention to the followings when you use this TFT LCD module.

9-1. MOUNTING PRECAUTIONS

(1) You must mount a module using holes arranged in four corners or four sides.
(2) You should consider the mounting structure so that uneven force (ex. Twisted stress) is not applied to the module. And the case on which a module is mounted should have sufficient strength so that external force is not transmitted directly to the module.
(3) Please attach the surface transparent protective plate to the surface in order to protect the polarizer. Transparent protective plate should have sufficient strength in order to the resist external force.
(4) You should adopt radiation structure to satisfy the temperature specification.
(5) Acetic acid type and chlorine type materials for the cover case are not desirable because the former generates corrosive gas of attacking the polarizer at high temperature and the latter causes circuit break by electro-chemical reaction.
(6) Do not touch, push or rub the exposed polarizers with glass, tweezers or anything harder than HB pencil lead. And please do not rub with dust clothes with chemical treatment.
Do not touch the surface of polarizer for bare hand or greasy cloth.(Some cosmetics are detrimental to the polarizer.)
(7) When the surface becomes dusty, please wipe gently with absorbent cotton or other soft materials like chamois soaks with petroleum benzene. Normal-hexane is recommended for cleaning the adhesives used to attach front / rear polarizers. Do not use acetone, toluene and alcohol because they cause chemical damage to the polarizer.
(8) Wipe off saliva or water drops as soon as possible. Their long time contact with polarizer causes deformations and color fading.
(9) Do not open the case because inside circuits do not have sufficient strength.

9-2. OPERATING PRECAUTIONS

(1) The spike noise causes the mis-operation of circuits. It should be lower than following voltage :
V=± 200mV(Over and under shoot voltage)

(2) Response time depends on the temperature.(In lower temperature, it becomes longer.)
(3) Brightness depends on the temperature. (In lower temperature, it becomes lower.)
And in lower temperature, response time(required time that brightness is stable after turned on) becomes longer.
(4) Be careful for condensation at sudden temperature change. Condensation makes damage to polarizer or electrical contacted parts. And after fading condensation, smear or spot will occur.
(5) When fixed patterns are displayed for a long time, remnant image is likely to occur.
(6) Module has high frequency circuits. Sufficient suppression to the electromagnetic interference shall be done by system manufacturers. Grounding and shielding methods may be important to minimized the interference.

One step solution for LCD / PDP / OLED panel application: Datasheet, inventory and accessory! www.panelook.com

Global LCD Panel Exchange Center www.panelook.com 屏库:全球液晶屏交易中心

9-3. ELECTROSTATIC DISCHARGE CONTROL

Since a module is composed of electronic circuits, it is not strong to electrostatic discharge. Make certain that treatment persons are connected to ground through wrist band etc. And don't touch interface pin directly.

9-4. PRECAUTIONS FOR STRONG LIGHT EXPOSURE

Strong light exposure causes degradation of polarizer and color filter.

9-5. STORAGE

When storing modules as spares for a long time, the following precautions are necessary.

(1) Store them in a dark place. Do not expose the module to sunlight or fluorescent light. Keep the temperature between 5°C and 35°C at normal humidity.
(2) The polarizer surface should not come in contact with any other object.
It is recommended that they be stored in the container in which they were shipped.

9-6. HANDLING PRECAUTIONS FOR PROTECTION FILM

(1) When the protection film is peeled off, static electricity is generated between the film and polarizer. This should be peeled off slowly and carefully by people who are electrically grounded and with well ion-blown equipment or in such a condition, etc.
(2) The protection film is attached to the polarizer with a small amount of glue. If some stress is applied to rub the protection film against the polarizer during the time you peel off the film, the glue is apt to remain on the polarizer.
Please carefully peel off the protection film without rubbing it against the polarizer.
(3) When the module with protection film attached is stored for a long time, sometimes there remains a very small amount of glue still on the polarizer after the protection film is peeled off.
(4) You can remove the glue easily. When the glue remains on the polarizer surface or its vestige is recognized, please wipe them off with absorbent cotton waste or other soft material like chamois soaked with normal-hexane.

One step solution for LCD / PDP / OLED panel application: Datasheet, inventory and accessory! www.panelook.com

Global LCD Panel Exchange Center www.panelook.com 屏库:全球液晶屏交易中心

APPENDIX A. Enhanced Extended Display Identification Data (EEDID™) 1/3

	Byte (Dec)	Byte (Hex)	Field Name and Comments	Value (Hex)	Value (Bin)
Header	0	00	Header	00	00000000
	1	01	Header	FF	11111111
	2	02	Header	FF	11111111
	3	03	Header	FF	11111111
	4	04	Header	FF	11111111
	5	05	Header	FF	11111111
	6	06	Header	FF	11111111
	7	07	Header	00	00000000
Vendor / Product Version	8	08	EISA manufacture code (3 Character ID) LGD	30	00110000
	9	09	EISA manufacture code (Compressed ASC II)	E4	11100100
	10	0A	Panel Supplier Reserved - Product Code 0348h	48	01001000
	11	0B	(Hex. LSB first)	03	00000011
	12	0C	LCD Module Serial No - Preferred but Optional ("0" If not used)	00	00000000
	13	0D	LCD Module Serial No - Preferred but Optional ("0" If not used)	00	00000000
	14	0E	LCD Module Serial No - Preferred but Optional ("0" If not used)	00	00000000
	15	0F	LCD Module Serial No - Preferred but Optional ("0" If not used)	00	00000000
	16	10	Week of Manufacture 00 weeks	00	00000000
	17	11	Year of Manufacture 2011 years	15	00010101
	18	12	EDID structure version # = 1	01	00000001
	19	13	EDID revision # = 3	03	00000011
Display Parameter	20	14	Video input Definition = Digital signal, 6 bit _ Dell only	90	10010000
	21	15	Max H image size (Rounded cm) = 38 cm	26	00100110
	22	16	Max V image size (Rounded cm) = 22 cm	16	00010110
	23	17	Display gamma = (gamma*100)-100 = Example:(2.2*100)-100=120 = 2.2 Gamma	78	01111000
	24	18	Feature Support (no_DPMS, no_Active Off/Very Low Power, RGB color display, Timing BLK 1,no_GTF)	0A	00001010
Panel Color Coordinates	25	19	Red/Green Low Bits (RxRy/GxGy)	F1	11110001
	26	1A	Blue/White Low Bits (BxBy/WxWy)	95	10010101
	27	1B	Red X Rx = 0.640	A3	10100011
	28	1C	Red Y Ry = 0.335	55	01010101
	29	1D	Green X Gx = 0.320	52	01010010
	30	1E	Green Y Gy = 0.630	A1	10100001
	31	1F	Blue X Bx = 0.150	26	00100110
	32	20	Blue Y By = 0.060	0F	00001111
	33	21	White X Wx = 0.313	50	01010000
	34	22	White Y Wy = 0.329	54	01010100
Established Timings	35	23	Established timing 1 (00h if not used)	00	00000000
	36	24	Established timing 2 (00h if not used)	00	00000000
	37	25	Manufacturer's timings (00h if not used)	00	00000000
Standard Timing ID	38	26	Standard timing ID1 (01h if not used)	01	00000001
	39	27	Standard timing ID1 (01h if not used)	01	00000001
	40	28	Standard timing ID2 (01h if not used)	01	00000001
	41	29	Standard timing ID2 (01h if not used)	01	00000001
	42	2A	Standard timing ID3 (01h if not used)	01	00000001
	43	2B	Standard timing ID3 (01h if not used)	01	00000001
	44	2C	Standard timing ID4 (01h if not used)	01	00000001
	45	2D	Standard timing ID4 (01h if not used)	01	00000001
	46	2E	Standard timing ID5 (01h if not used)	01	00000001
	47	2F	Standard timing ID5 (01h if not used)	01	00000001
	48	30	Standard timing ID6 (01h if not used)	01	00000001
	49	31	Standard timing ID6 (01h if not used)	01	00000001
	50	32	Standard timing ID7 (01h if not used)	01	00000001
	51	33	Standard timing ID7 (01h if not used)	01	00000001
	52	34	Standard timing ID8 (01h if not used)	01	00000001
	53	35	Standard timing ID8 (01h if not used)	01	00000001

One step solution for LCD / PDP / OLED panel application: Datasheet, inventory and accessory! www.panelook.com

Global LCD Panel Exchange Center www.panelook.com 屏库:全球液晶屏交易中心

APPENDIX A. Enhanced Extended Display Identification Data (EEDID™) 2/3

	Byte (Dec)	Byte (Hex)	Field Name and Comments		Value (Hex)	Value (Bin)
Timing Descriptor #1	54	36	Pixel Clock/10,000 (LSB)	149.8 MHz @ 60Hz	84	10000100
	55	37	Pixel Clock/10,000 (MSB)		3A	00111010
	56	38	Horizontal Active (lower 8 bits)	1920 Pixels	80	10000000
	57	39	Horizontal Blanking(Thp-HA) (lower 8 bits)	356 Pixels	64	01100100
	58	3A	Horizontal Active / Horizontal Blanking(Thp-HA) (upper 4:4bits)		71	01110001
	59	3B	Vertical Avtive	1080 Lines	38	00111000
	60	3C	Vertical Blanking (Tvp-HA) (DE Blanking typ.for DE only panels)	17 Lines	11	00010001
	61	3D	Vertical Active : Vertical Blanking (Tvp-HA) (upper 4:4bits)		40	01000000
	62	3E	Horizontal Sync. Offset (Thfp)	64 Pixels	40	01000000
	63	3F	Horizontal Sync Pulse Width (HSPW)	96 Pixels	60	01100000
	64	40	Vertical Sync Offset(Tvfp) : Sync Width (VSPW)	2 Lines : 3 Lines	23	00100011
	65	41	Horizontal Vertical Sync Offset/Width (upper 2bits)		00	00000000
	66	42	Horizontal Image Size (mm)	383 mm	7F	01111111
	67	43	Vertical Image Size (mm)	215 mm	D7	11010111
	68	44	Horizontal Image Size / Vertical Image Size		10	00010000
	69	45	Horizontal Border = 0 (Zero for Notebook LCD)		00	00000000
	70	46	Vertical Border = 0 (Zero for Notebook LCD)		00	00000000
	71	47	Non-Interlace, Normal display, no stereo, Digital Separate (Vsync_NEG, Hsync_NEG), DE only note : LSB is set to '1' if panel is DE-timing only. H/V can be ignored.		19	00011001
Timing Descriptor #2	72	48	Flag		00	00000000
	73	49	Flag		00	00000000
	74	4A	Flag		00	00000000
	75	4B	Data Type Tag (Descriptor Defined by manufacturer)		00	00000000
	76	4C	Flag		00	00000000
	77	4D	Descriptor Defined by manufacturer		00	00000000
	78	4E	Descriptor Defined by manufacturer		00	00000000
	79	4F	Descriptor Defined by manufacturer		00	00000000
	80	50	Descriptor Defined by manufacturer		00	00000000
	81	51	Descriptor Defined by manufacturer		00	00000000
	82	52	Descriptor Defined by manufacturer		00	00000000
	83	53	Descriptor Defined by manufacturer		00	00000000
	84	54	Descriptor Defined by manufacturer		00	00000000
	85	55	Descriptor Defined by manufacturer		00	00000000
	86	56	Descriptor Defined by manufacturer		00	00000000
	87	57	Descriptor Defined by manufacturer		00	00000000
	88	58	Descriptor Defined by manufacturer		00	00000000
	89	59	Descriptor Defined by manufacturer		00	00000000
Timing Descriptor #3	90	5A	Flag		00	00000000
	91	5B	Flag		00	00000000
	92	5C	Flag		00	00000000
	93	5D	Data Type Tag (ASCII String)		FE	11111110
	94	5E	Flag		00	00000000
	95	5F	ASCII String	L	4C	01001100
	96	60	ASCII String	G	47	01000111
	97	61	ASCII String		20	00100000
	98	62	ASCII String	D	44	01000100
	99	63	ASCII String	i	69	01101001
	100	64	ASCII String	s	73	01110011
	101	65	ASCII String	p	70	01110000
	102	66	ASCII String	l	6C	01101100
	103	67	ASCII String	a	61	01100001
	104	68	ASCII String	y	79	01111001
	105	69	Manufacturer P/N(If<13 char--> 0Ah, then terminate with ASC II		0A	00001010
	106	6A	Manufacturer P/N(If<13 char--> 0Ah, then terminate with ASC II		20	00100000
	107	6B	Manufacturer P/N(If<13 char--> 0Ah, then terminate with ASC II		20	00100000

code 0Ah,set remaining

One step solution for LCD / PDP / OLED panel application: Datasheet, inventory and accessory! www.panelook.com

Global LCD Panel Exchange Center www.panelook.com 屏库:全球液晶屏交易中心

APPENDIX A. Enhanced Extended Display Identification Data (EEDID™) 3/3

	Byte (Dec)	Byte (Hex)	Field Name and Comments		Value (Hex)	Value (Bin)
Timing Descriptor #4	108	6C	Flag		00	00000000
	109	6D	Flag		00	00000000
	110	6E	Flag		00	00000000
	111	6F	Data Type Tag (ASCII String)		FE	11111110
	112	70	Flag		00	00000000
	113	71	ASCII String	L	4C	01001100
	114	72	ASCII String	P	50	01010000
	115	73	ASCII String	1	31	00110001
	116	74	ASCII String	7	37	00110111
	117	75	ASCII String	3	33	00110011
	118	76	ASCII String	W	57	01010111
	119	77	ASCII String	F	46	01000110
	120	78	ASCII String	1	31	00110001
	121	79	ASCII String	-	2D	00101101
	122	7A	ASCII String	T	54	01010100
	123	7B	ASCII String	L	4C	01001100
	124	7C	ASCII String	A	41	01000001
	125	7D	ASCII String	2	32	00110010
Che	126	7E	Extension flag (# of optional 128 panel ID extension block to follow, Typ = 0)		00	00000000
	127	7F	Check Sum (The 1-byte sum of all 128 bytes in this panel ID block shall = 0)		F4	11110100

www.panelook.com

One step solution for LCD / PDP / OLED panel application: Datasheet, inventory and accessory! www.panelook.com