www.DataSheet4U.com

FOXCONN®

SPECIFICATIONS

Modular Jack

JFM Series
RJ45 1X1
R/A, T/H Type
1.27mm [.050"] Pitch
10/100 Base-T

Mechanical

Mating Force: *4Pounds max.*
Unmating Force: *4Pounds max.*
Durability: *1000 Cycles*

Electrical

Voltage Rating: *150VAC max.*
Current Rating: *1.5A max.*
Dielectric Withstanding Voltage: *1000V*
Insertion Loss: *-1.0dB max. @1-100MHz*
Return Loss: *-12dB min. @1-80MHz*
Cross Talk: *-35dB min. @1-100MHz*

Physical

Housing: *Thermoplastic, UL 94V-0 rated in Black Color*
Contact: *Copper Alloy*
Shell: *Copper Alloy*
Operating Temperature: *0℃ to +85℃*

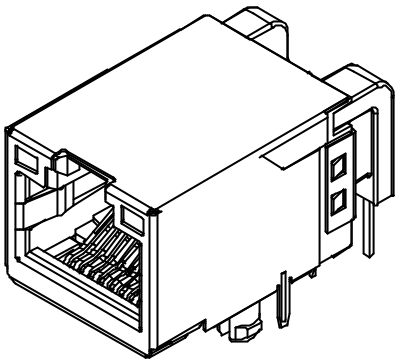

DRAWING

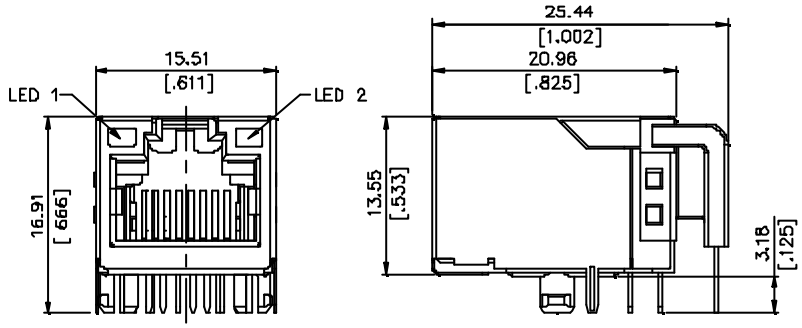

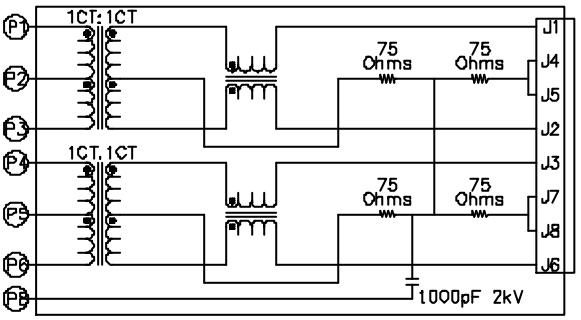

SCHEMATIC

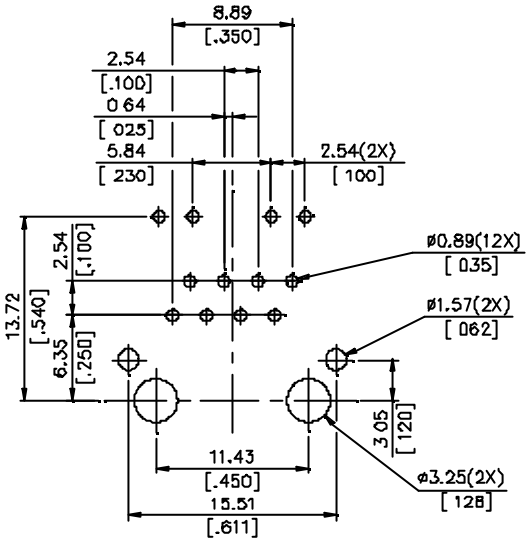

RECOMMENDED P.C.B. LAYOUT

ORDERING INFORMATION

PRODUCT NO. : JFM 2 4 1 1 * - 0101 *

- Series Prefix — JFM=Jack with Magnetics
- Protocol Type — 2=10/100 Base T
- Core Count — 4=4-Core
- Configuration — 1=1X1 T/U w/o Shield Tabs
- PCB Attachment Method — 1=Solder Tail
- LED
- Extension Code
- Package — W=Tray, T=Tube

JFM2411B-0101*	Green	Orange-Yellow
JFM2411A-0101*	Green	Green-Yellow
JFM24119-0101*	Green	Red
JFM2411B-0101*	Red	Green
JFM24117-0101*	Yellow	Red
JFM24116-0101*	Red	Yellow
JFM24115-0101*	Red	Red
JFM24114-0101*	Yellow	Yellow
JFM24113-0101*	Green	Yellow
JFM24112-0101*	Green	Green
JFM24111-0101*	Yellow	Green
JFM24110-0101*	None	
P/N	LED1	LED2

www.DataSheet4U.com

All specification & dimensions are subject to change, please call your nearest Foxconn sales representative for update information.