Global LCD Panel Exchange Center www.panelook.com 屏库:全球液晶屏交易中心

京东方 BOE

PROPRIETARY NOTE
THIS SPECIFICATION IS THE PROPERTY OF BOE DT AND SHALL NOT BE REPRODUCED OR COPIED WITHOUT THE WRITTEN PERMISSION OF BOE DT AND MUST BE RETURNED TO BOE DT UPON ITS REQUEST

HR270WU3-300 Preliminary Product Specification

BEIJING BOE Display TECHNOLOGY

SPEC. NUMBER	PRODUCT GROUP	Rev.P0	ISSUE DATE	PAGE
S	TFT-LCD		2013.03.26	1 OF 30

B2010-8002-O (1/3) A4(210 X 297)

www.panelook.com

One step solution for LCD / PDP / OLED panel application: Datasheet, inventory and accessory! www.panelook.com

Global LCD Panel Exchange Center www.panelook.com 屏库:全球液晶屏交易中心

REVISION HISTORY

REV.	ECN No.	DESCRIPTION OF CHANGES	DATE	PREPARED
Rev.P0		Initial Release	Mar. 26. 13'	LJ.Xiao

One step solution for LCD / PDP / OLED panel application: Datasheet, inventory and accessory! www.panelook.com

Global LCD Panel Exchange Center www.panelook.com 屏库:全球液晶屏交易中心

Contents

No.	Item	Page
1.0	General Description	4
2.0	Absolute Maximum Ratings	6
3.0	Electrical Specifications	7
4.0	Optical Specifications	8
5.0	Interface Connection	10
6.0	Signal Timing Specifications	13
7.0	Signal Timing Waveforms of Interface Signal	15
8.0	Input Signals, Display Colors & Gray Scale of Colors	17
9.0	Power Sequence	18
10.0	Mechanical Characteristics	19
11.0	Reliability Test	20
12.0	Handling& Cautions	21
13.0	Product Serial Number	22
14.0	Packing	23
15.0	Appendix	25

www.panelook.com

One step solution for LCD / PDP / OLED panel application: Datasheet, inventory and accessory! www.panelook.com

Global LCD Panel Exchange Center www.panelook.com 屏库:全球液晶屏交易中心

1.0 GENERAL DESCRIPTION

1.1 Introduction

HR270WU3-300 is a color active matrix TFT LCD module using amorphous silicon TFT's (Thin Film Transistors) as an active switching devices. This module has a 27.0 inch diagonally measured active area with FHD resolutions (1920 horizontal by 1080 vertical pixel array). Each pixel is divided into RED, GREEN, BLUE dots which are arranged in vertical stripe and this module can display 16.7M colors. The TFT-LCD panel used for this module is adapted for a low reflection and higher color type.

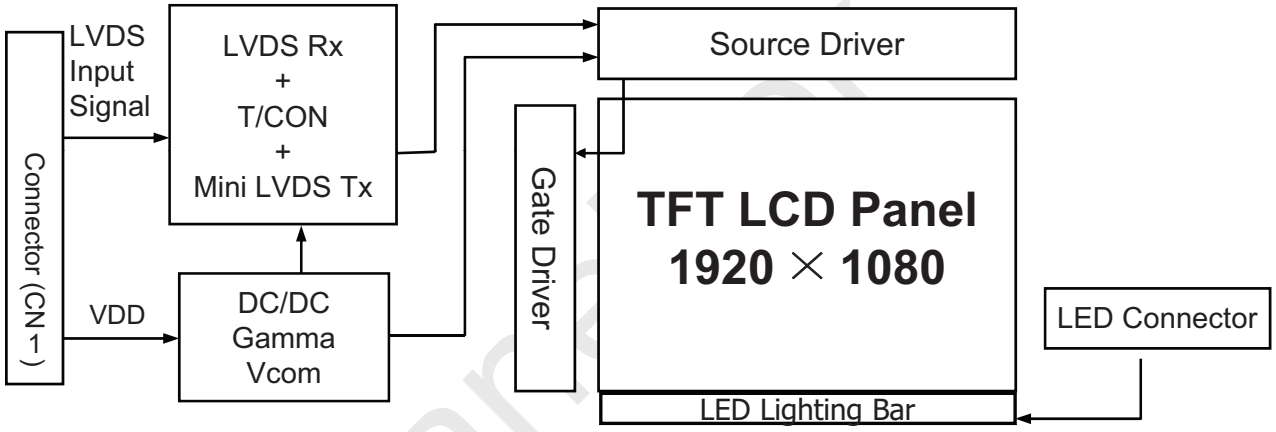

1.2 Features

- LVDS Interface with 2 pixel / clock
- High-speed response
- 8-bit (Real) color depth, display 16. 7M colors
- High luminance and contrast ratio, low reflection and wide viewing angle
- DE (Data Enable) only
- RoHS/Halogen Free
- Gamma Correction

One step solution for LCD / PDP / OLED panel application: Datasheet, inventory and accessory! www.panelook.com

Global LCD Panel Exchange Center www.panelook.com 屏库:全球液晶屏交易中心

1.3 Application

- Desktop Type of PC & Workstation Use
- Display Terminals for Control System
- Monitors for Process Controller

1.4 General Specification

The followings are general specifications at the model HR270WU3-300.

<Table 1. General Specifications>

Parameter	Specification	Unit	Remarks
Active area	597.888(H) × 336.312(V)	mm	
Number of pixels	1920(H) ×1080(V)	pixels	
Pixel pitch	0.3114(H) ×0.3114(V)	mm	
Pixel arrangement	RGB Vertical stripe		
Display colors	16.7M	colors	
Display mode	Normally Black		
Open Cell Transmittance	4.85	%	At center point with BOE BLU
Weight	TBD (Typ.)	g	
Surface Treatment	Haze 25%, 3H		
Power Consumption	P_D : 7w (max)		

One step solution for LCD / PDP / OLED panel application: Datasheet, inventory and accessory! www.panelook.com

Global LCD Panel Exchange Center www.panelook.com 屏库:全球液晶屏交易中心

2.0 ABSOLUTE MAXIMUM RATINGS

The followings are maximum values which, if exceed, may cause faulty operation or damage to the unit. The operational and non-operational maximum voltage and current values are listed in Table 2.

< Table 2. Absolute Maximum Ratings> [VSS=GND=0V]

Parameter	Symbol	Min.	Max.	Unit	Remarks
Power Supply Voltage	V_{DD}	-0.3	6.0	V	Ta = 25 ℃
Logic Supply Voltage	V_{IN}	VSS-0.3	V_{DD}+0.3	V	
LED Light Bar Current Per Input Pin	IPIN	-	105	mA	
LED Light Bar Voltage Per Input Pin	VPIN	-	47.6	V	
Operating Temperature	T_{OP}	0	+50	℃	1)
Storage Temperature	T_{ST}	-20	+60	℃	1)

Note : 1) Temperature and relative humidity range are shown in the figure below.
Wet bulb temperature should be 39 ^{O}C max. and no condensation of water.

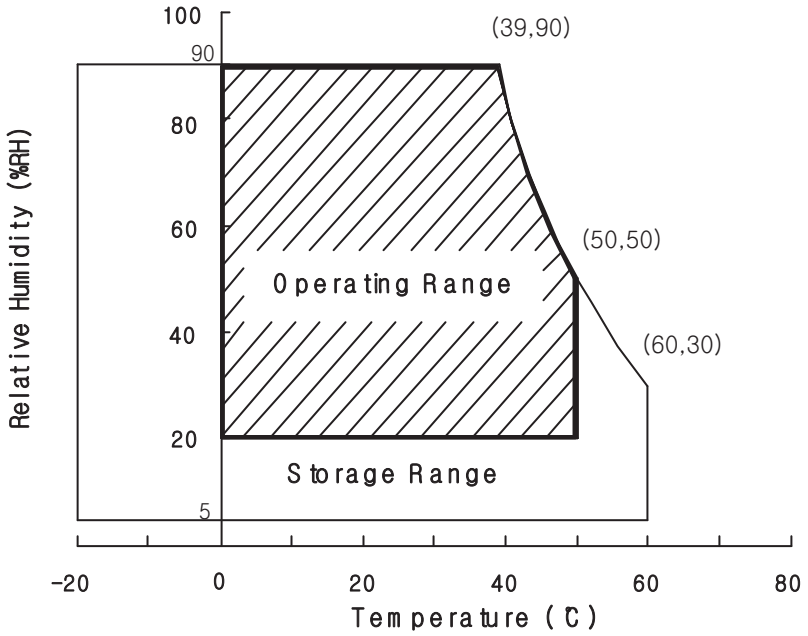

One step solution for LCD / PDP / OLED panel application: Datasheet, inventory and accessory! www.panelook.com

Global LCD Panel Exchange Center www.panelook.com 屏库:全球液晶屏交易中心

3.0 ELECTRICAL SPECIFICATIONS

3.1Electrical Specifications

< Table 3. Electrical specifications > [Ta =25±2 ℃]

Parameter		Min.	Typ.	Max.	Unit	Remarks
Power Supply Voltage	V_{DD}	4.5	5.0	5.5	V	Note1
Power Supply Current	I_{DD}	-	1000	1400	mA	
In-Rush Current	I_{RUSH}	-	2.0	3.0	A	Note 2
Permissible Input Ripple Voltage	V_{RF}	-	-	100	mV	V_{DD} = 5.0V
High Level Differential Input Threshold Voltage	V_{IH}	-	-	+100	mV	
Low Level Differential Input Threshold Voltage	V_{IL}	-100	-	-	mV	
Differential input voltage	$\|V_{ID}\|$	200	-	600	mV	
Differential input common mode voltage	Vcm	1.0	1.2	1.5		V_{IH}=100mV, V_{IL}=-100mV
Power Consumption	P_D	-	5	7	W	
	P_{BL}	-	18.8	20	W	Note 3
	P_{total}	-	23.8	27	W	

Notes : 1. The supply voltage is measured and specified at the interface connector of LCM.
The current draw and power consumption specified is for VDD=5.0V, Frame rate=75Hz
Clock frequency = 92.9 MHz. Test Pattern of power supply current
a) Typ : Color Test
b) Max : Skip Subpixel255

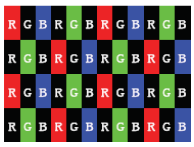

2. Duration of rush current is about 2 ms and rising time of VDD is 520 μs ± 20 %
3. Calculated value for reference (Input pins*VPIN ×IPIN) excluding inverter loss.

One step solution for LCD / PDP / OLED panel application: Datasheet, inventory and accessory! www.panelook.com

Global LCD Panel Exchange Center www.panelook.com 屏库:全球液晶屏交易中心

4.0 OPTICAL SPECIFICATION

4.1 Overview

The test of Optical specifications shall be measured in a dark room (ambient luminance ≤ 1 lux and temperature = 25±2℃) with the equipment of Luminance meter system (Goniometer system and TOPCONE BM-5) and test unit shall be located at an approximate distance 50cm from the LCD surface at a viewing angle of θ and Φ equal to 0°. We refer to $\theta_{Ø=0}$ (=θ_3) as the 3 o'clock direction (the "right"), $\theta_{Ø=90}$ (= θ_{12}) as the 12 o'clock direction ("upward"), $\theta_{Ø=180}$ (= θ_9) as the 9 o'clock direction ("left") and $\theta_{Ø=270}$(= θ_6) as the 6 o'clock direction ("bottom"). While scanning θ and/or Ø, the center of the measuring spot on the Display surface shall stay fixed. The measurement shall be executed after 30 minutes warm-up period. VDD shall be 5.0V +/-10% at 25°C. Optimum viewing angle direction is 6 'clock.

4.2 Optical Specifications

[VDD = 5.0V, Frame rate = 60Hz, Clock = 74.25MHz, I_{BL} = 400mA, Ta =25±2 ℃]

Parameter		Symbol	Condition	Min.	Typ.	Max.	Unit	Remark
Viewing Angle range	Horizontal	Θ_3	CR > 10	75	89	-	Deg.	Note 1
		Θ_9		75	89	-	Deg.	
	Vertical	Θ_{12}		70	89	-	Deg.	
		Θ_6		70	89	-	Deg.	
Luminance Contrast ratio		CR	Θ = 0° (Center) Normal Viewing Angle	700	1000			Note 2
Transmittance					4.85%			Note 3
White luminance uniformity		ΔY		75	80		%	Note 4
Reproduction of color	White	W_x		0.283	0.313	0.343	-	Note 5 (BOE BL)
		W_y		0.299	0.329	0.359	-	
	Red	R_x		0.615	0.645	0.675	-	
		R_y		0.298	0.328	0.358	-	
	Green	G_x		0.273	0.303	0.333	-	
		G_y		0.588	0.618	0.648	-	
	Blue	B_x		0.118	0.148	0.178	-	
		B_y		0.030	0.060	0.090	-	
Response Time	GTG	T_g			14	20	ms	Note 6
Cross Talk		CT		-	-	2.0	%	Note 7

One step solution for LCD / PDP / OLED panel application: Datasheet, inventory and accessory! www.panelook.com

Global LCD Panel Exchange Center www.panelook.com 屏库:全球液晶屏交易中心

Note :

1. Viewing angle is the angle at which the contrast ratio is greater than 10. The viewing are determined for the horizontal or 3, 9 o'clock direction and the vertical or 6, 12 o'clock direction with respect to the optical axis which is normal to the LCD surface.
2. Contrast measurements shall be made at viewing angle of θ= 0° and at the center of the LCD surface. Luminance shall be measured with all pixels in the view field set first to white, then to the dark (black) state. (See FIGURE 1 shown in Appendix) Luminance Contrast Ratio (CR) is defined mathematically.

$$CR = \frac{\text{Luminance when displaying a white raster}}{\text{Luminance when displaying a black raster}}$$

3. Measurements shall be made at the center of the panel. The BLU is used by BOE.
   Definition of Transmittance (T%) :
   Module is with white(L255) signal input

$$\text{Transmittance} = \frac{\text{Luminance of LCD Module}}{\text{Luminance of BLU}} \times 100\ \%$$

4. The White luminance uniformity on LCD surface is then expressed as :
   ΔY = (Minimum Luminance of 9points / Maximum Luminance of 9points) * 100
   (See FIGURE 2 shown in Appendix).
5. The color chromaticity coordinates specified in Table 4. shall be calculated from the spectral data measured with all pixels first in red, green, blue and white. Measurements shall be made at the center of the panel.
6. Response time Tg is the average time required for display transition by switching the input signal as below table and is based on Frame rate fV =60Hz to optimize.
   Each time in below table is defined as Figure 3and shall be measured by switching the input signal for "any level of gray(bright)"and "any level of gray(dark)".

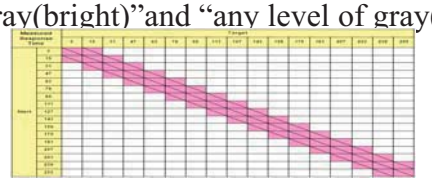

7. Cross-Talk of one area of the LCD surface by another shall be measured by comparing the luminance (Y_A) of a 25mm diameter area, with all display pixels set to a gray level, to the luminance (Y_B) of that same area when any adjacent area is driven dark. (See FIGURE 4 shown in Appendix).

One step solution for LCD / PDP / OLED panel application: Datasheet, inventory and accessory! www.panelook.com

Global LCD Panel Exchange Center www.panelook.com 屏库:全球液晶屏交易中心

5.0 INTERFACE CONNECTION.

5.1 Electrical Interface Connection

- CN11 Module Side Connector : UJU IS100-L30R-C23or Equivalent
  User Side Connector : JAE FI-X30H or Equivalent

Pin No	Symbol	Function	Remark
1	RXO0-	Negative Transmission data of Pixel 0 (ODD)	
2	RXO0+	Positive Transmission data of Pixel 0 (ODD)	
3	RXO1-	Negative Transmission data of Pixel 1 (ODD)	
4	RXO1+	Positive Transmission data of Pixel 1 (ODD)	
5	RXO2-	Negative Transmission data of Pixel 2 (ODD)	
6	RXO2+	Positive Transmission data of Pixel 2 (ODD)	
7	GND	Power Ground	
8	RXOC-	Negative Transmission Clock (ODD)	
9	RXOC+	Positive Transmission Clock (ODD)	
10	RXO3-	Negative Transmission data of Pixel 3 (ODD)	
11	RXO3+	Positive Transmission data of Pixel 3 (ODD)	
12	RXE0-	Negative Transmission data of Pixel 0 (EVEN)	
13	RXE0+	Positive Transmission data of Pixel 0 (EVEN)	
14	GND	Power Ground	
15	RXE1-	Negative Transmission data of Pixel 1 (EVEN)	
16	RXE1+	Positive Transmission data of Pixel 1 (EVEN)	
17	GNG	Power Ground	
18	RXE2-	Negative Transmission data of Pixel 2 (EVEN)	
19	RXE2+	Positive Transmission data of Pixel 2 (EVEN)	
20	RXEC-	Negative Transmission Clock (EVEN)	
21	RXEC+	Positive Transmission Clock (EVEN)	
22	RXE3-	Negative Transmission data of Pixel 3 (EVEN)	
23	RXE3+	Positive Transmission data of Pixel 3 (EVEN)	
24	GND	Power Ground	Note 1
25	SCL	Internal Use	
26	SDA	Internal Use	
27	NC	No Connection	
28	VDD	Power Supply: +5V	
29	VDD		
30	VDD		

Note 1 : This pin should be connected with GND.

One step solution for LCD / PDP / OLED panel application: Datasheet, inventory and accessory! www.panelook.com

Global LCD Panel Exchange Center www.panelook.com 屏库:全球液晶屏交易中心

5.2 LVDS Interface (Tx; THC63LVDF83A or Equivalent)

5.2.1 LVDS Interface

	Input Signal	Transmitter		Interface		HT236F01-100 (CN11)	Remark
		Pin No.	Pin No.	System (Tx)	TFT-LCD (Rx)	Pin No.	
LVDS	OR0	51	48 47	OUT0- OUT0+	RXO0- RXO0+	1 2	
	OR1	52					
	OR2	54					
	OR3	55					
	OR4	56					
	OR5	3					
	OG0	4					
	OG1	6	46 45	OUT1- OUT1+	RXO1- RXO1+	3 4	
	OG2	7					
	OG3	11					
	OG4	12					
	OG5	14					
	OB0	15					
	OB1	19					
	OB2	20	42 41	OUT2- OUT2+	RXO2- RXO2+	5 6	
	OB3	22					
	OB4	23					
	OB5	24					
	Hsync	27					
	Vsync	28					
	DE	30					
	MCLK	31	40 39	CLK OUT- CLK OUT+	RXO CLK- RXO CLK+	8 9	
	OR6	50	38 37	OUT3- OUT3+	RXO3- RXO3+	10 11	
	OR7	2					
	OG6	8					
	OG7	10					
	OB6	16					
	OB7	18					
	RSVD	25					

One step solution for LCD / PDP / OLED panel application: Datasheet, inventory and accessory! www.panelook.com

Global LCD Panel Exchange Center www.panelook.com 屏库:全球液晶屏交易中心

5.3 Data Input Format

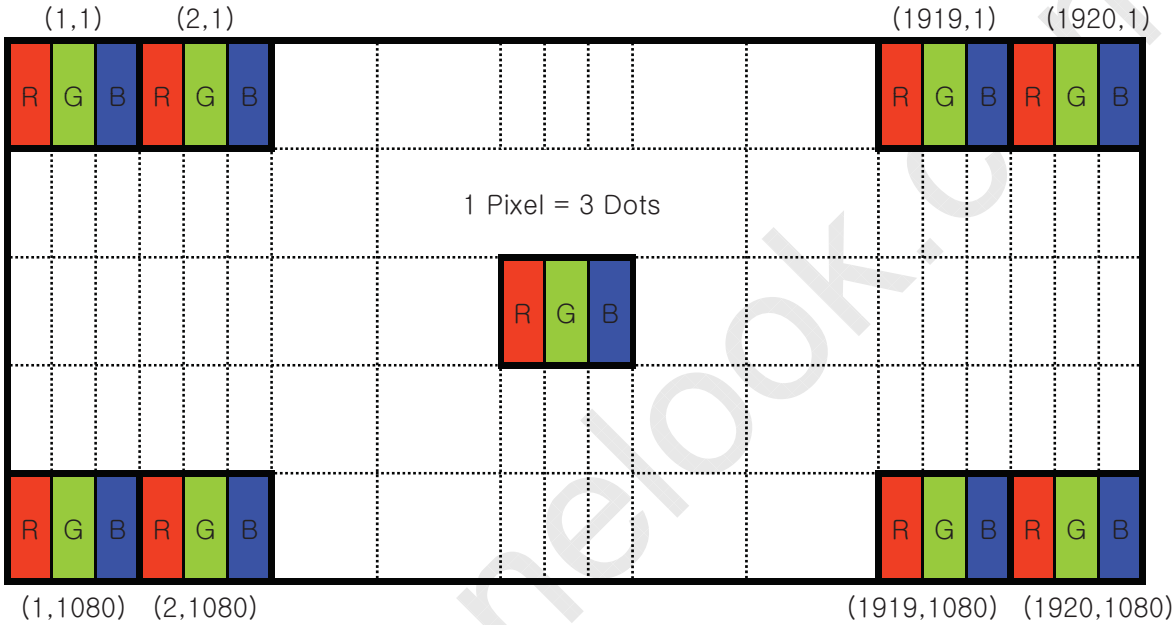

Display Position of Input Data (V-H)

One step solution for LCD / PDP / OLED panel application: Datasheet, inventory and accessory! www.panelook.com

Global LCD Panel Exchange Center www.panelook.com 屏库:全球液晶屏交易中心

6.0 SIGNAL TIMING SPECIFICATION

6.1 The HR270WU3-300 is operated by the DE only.

Item		Symbols	Min	Typ	Max	Unit
Clock	Frequency	1/Tc	58.54	74.25	98	MHz
	High Time	Tch	-	4/7Tc	-	
	Low Time	Tcl	-	3/7Tc	-	
Frame Period		Tv	1115	1126	1136	lines
			50	60	75	Hz
			20	16.7	13.3	ms
Vertical Display Period		Tvd	-	1080	-	lines
One line Scanning Period		Th	1050	1100	1150	clocks
Horizontal Display Period		Thd	960	960	960	clocks

www.panelook.com

One step solution for LCD / PDP / OLED panel application: Datasheet, inventory and accessory! www.panelook.com

Global LCD Panel Exchange Center www.panelook.com 屏库:全球液晶屏交易中心

6.2 LVDS Rx Interface Timing Parameter

The specification of the LVDS Rx interface timing parameter is shown in Table 4.

<Table 4. LVDS Rx Interface Timing Specification>

Item	Symbol	Min	Typ	Max	Unit	Remark
CLKIN Period	tRCIP	10.20	13.47	17.08	nsec	
Input Data 0	tRIP1	-0.4	0.0	+0.4	nsec	
Input Data 1	tRIP0	tRCIP/7-0.4	tRCIP/7	tRCIP/7+0.4	nsec	
Input Data 2	tRIP6	2 ×tRCIP/7-0.4	2 ×tRCIP/7	2 ×tRCIP/7+0.4	nsec	
Input Data 3	tRIP5	3 ×tRCIP/7-0.4	3 ×tRCIP/7	3 ×tRCIP/7+0.4	nsec	
Input Data 4	tRIP4	4 ×tRCIP/7-0.4	4 ×tRCIP/7	4 ×tRCIP/7+0.4	nsec	
Input Data 5	tRIP3	5 ×tRCIP/7-0.4	5 ×tRCIP/7	5 ×tRCIP/7+0.4	nsec	
Input Data 6	tRIP2	6 ×tRCIP/7-0.4	6 ×tRCIP/7	6 ×tRCIP/7+0.4	nsec	

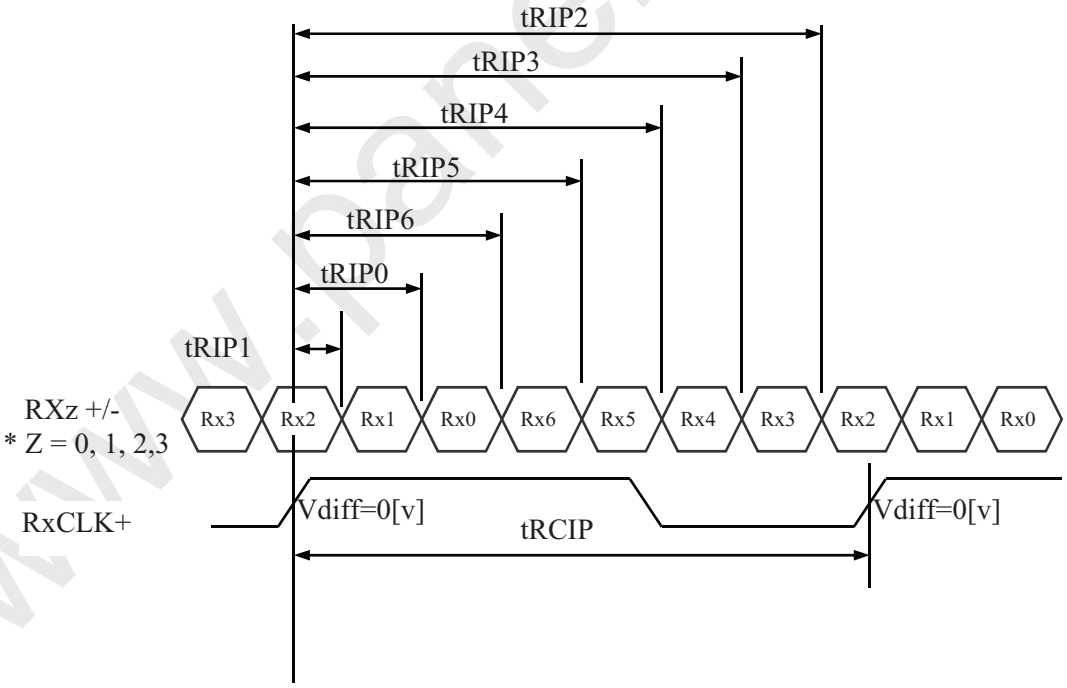

* Vdiff = (RXz+)-(RXz-),…. ,(RXCLK+)-(RXCLK-)

One step solution for LCD / PDP / OLED panel application: Datasheet, inventory and accessory! www.panelook.com

Global LCD Panel Exchange Center www.panelook.com 屏库:全球液晶屏交易中心

7.0 SIGNAL TIMING WAVEFORMS OF INTERFACE SIGNAL

7.1 Sync Timing Waveforms

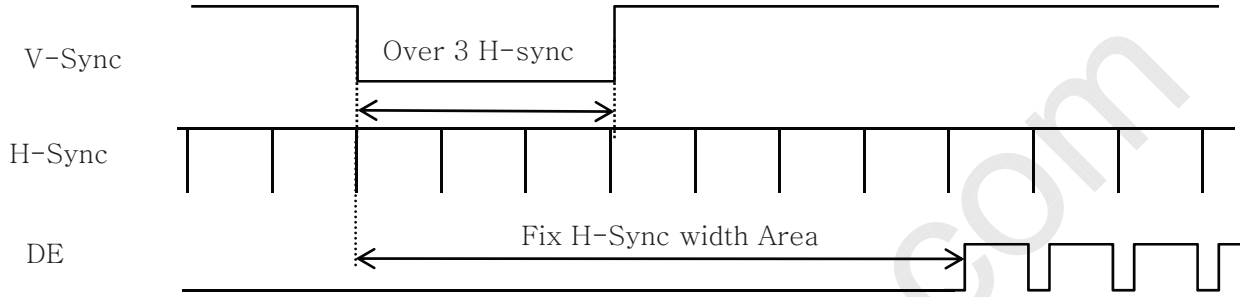

1) Need over 3 H-sync during V-Sync Low
2) Fix H-Sync width from V-Sync falling edge to first rising edge

7.2 Vertical Timing Waveforms

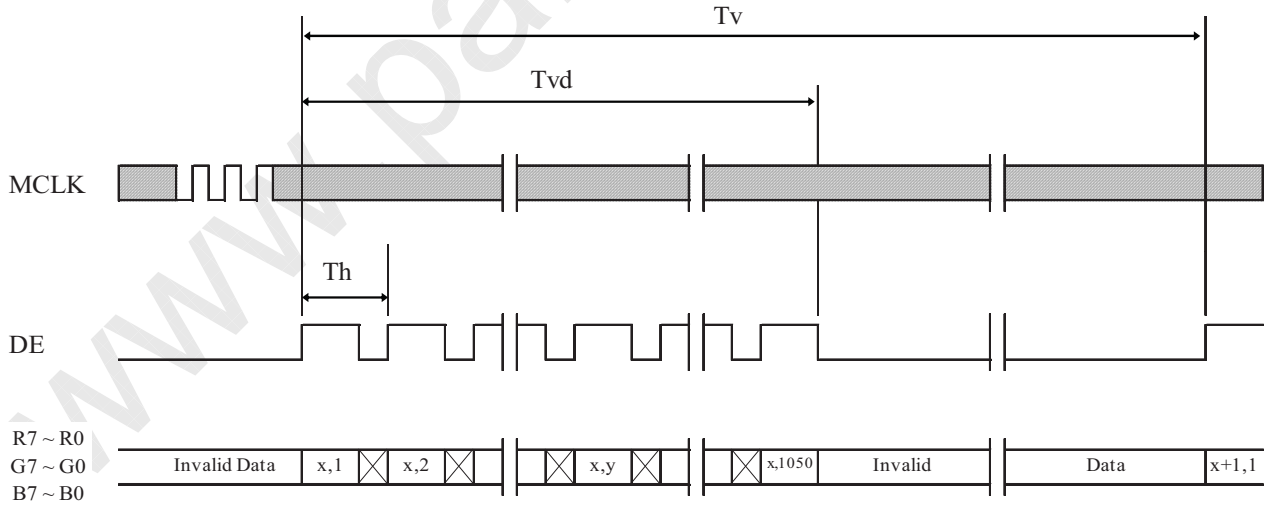

One step solution for LCD / PDP / OLED panel application: Datasheet, inventory and accessory! www.panelook.com

Global LCD Panel Exchange Center www.panelook.com 屏库:全球液晶屏交易中心

7.3 Horizontal Timing Waveforms

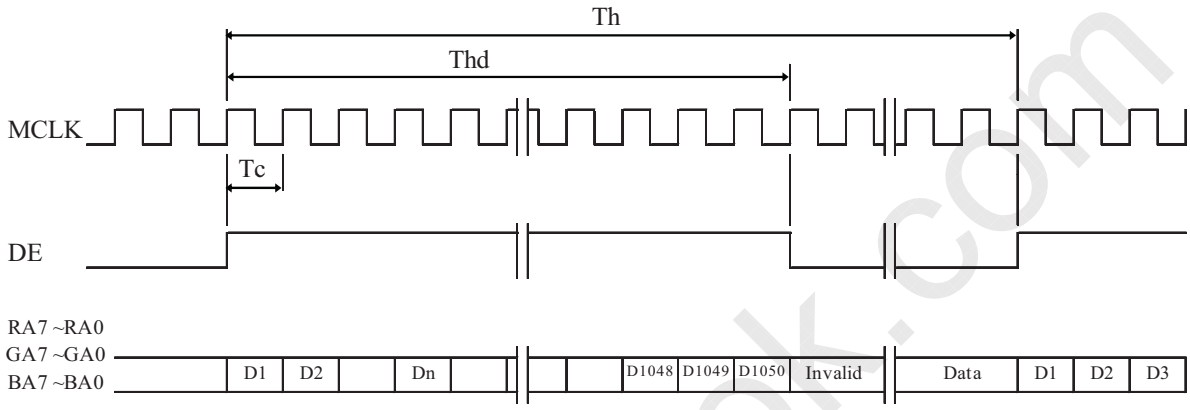

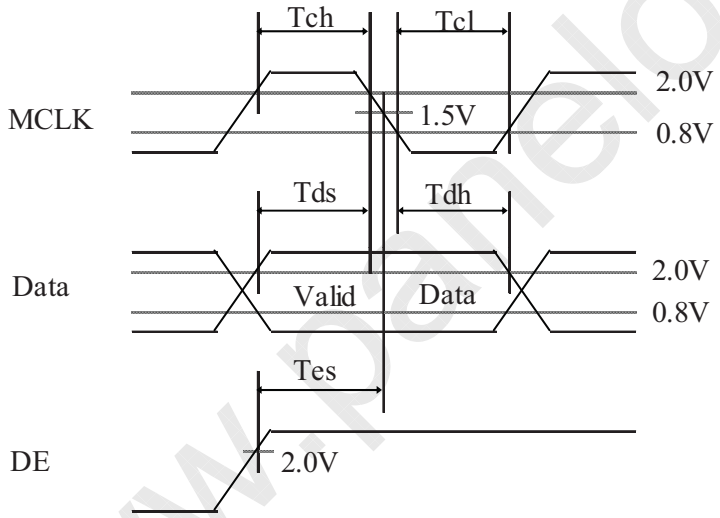

www.panelook.com

One step solution for LCD / PDP / OLED panel application: Datasheet, inventory and accessory! www.panelook.com

Global LCD Panel Exchange Center www.panelook.com 屏库:全球液晶屏交易中心

8.0 INPUT SIGNALS, BASIC DISPLAY COLORS & GRAY SCALE OF COLORS

Color & Gray Scale		RED DATA								GREEN DATA								BLUE DATA							
		R7	R6	R5	R4	R3	R2	R1	R0	G7	G6	G5	G4	G3	G2	G1	G0	B7	B6	B5	B4	B3	B2	B1	B0
Basic Colors	Black	0	0	0	0	0	0	0	0	0	0	0	0	0	0	0	0	0	0	0	0	0	0	0	0
	Blue	0	0	0	0	0	0	0	0	0	0	0	0	0	0	0	0	1	1	1	1	1	1	1	1
	Green	0	0	0	0	0	0	0	0	1	1	1	1	1	1	1	1	0	0	0	0	0	0	0	0
	Cyan	0	0	0	0	0	0	0	0	1	1	1	1	1	1	1	1	1	1	1	1	1	1	1	1
	Red	1	1	1	1	1	1	1	1	0	0	0	0	0	0	0	0	0	0	0	0	0	0	0	0
	Magenta	1	1	1	1	1	1	1	1	0	0	0	0	0	0	0	0	1	1	1	1	1	1	1	1
	Yellow	1	1	1	1	1	1	1	1	1	1	1	1	1	1	1	1	0	0	0	0	0	0	0	0
	White	1	1	1	1	1	1	1	1	1	1	1	1	1	1	1	1	1	1	1	1	1	1	1	1
Gray Scale of RED	Black	0	0	0	0	0	0	0	0	0	0	0	0	0	0	0	0	0	0	0	0	0	0	0	0
	△	0	0	0	0	0	0	0	1	0	0	0	0	0	0	0	0	0	0	0	0	0	0	0	0
	Darker	0	0	0	0	0	0	1	0	0	0	0	0	0	0	0	0	0	0	0	0	0	0	0	0
	△	↑								↑								↑							
	▽	↓								↓								↓							
	Brighter	1	1	1	1	1	1	0	1	0	0	0	0	0	0	0	0	0	0	0	0	0	0	0	0
	▽	1	1	1	1	1	1	1	0	0	0	0	0	0	0	0	0	0	0	0	0	0	0	0	0
	Red	1	1	1	1	1	1	1	1	0	0	0	0	0	0	0	0	0	0	0	0	0	0	0	0
Gray Scale of GREEN	Black	0	0	0	0	0	0	0	0	0	0	0	0	0	0	0	0	0	0	0	0	0	0	0	0
	△	0	0	0	0	0	0	0	0	0	0	0	0	0	0	0	1	0	0	0	0	0	0	0	0
	Darker	0	0	0	0	0	0	0	0	0	0	0	0	0	0	1	0	0	0	0	0	0	0	0	0
	△	↑								↑								↑							
	▽	↓								↓								↓							
	Brighter	0	0	0	0	0	0	0	0	1	1	1	1	1	1	0	1	0	0	0	0	0	0	0	0
	▽	0	0	0	0	0	0	0	0	1	1	1	1	1	1	1	0	0	0	0	0	0	0	0	0
	Green	0	0	0	0	0	0	0	0	1	1	1	1	1	1	1	1	0	0	0	0	0	0	0	0
Gray Scale of BLUE	Black	0	0	0	0	0	0	0	0	0	0	0	0	0	0	0	0	0	0	0	0	0	0	0	0
	△	0	0	0	0	0	0	0	0	0	0	0	0	0	0	0	0	0	0	0	0	0	0	0	1
	Darker	0	0	0	0	0	0	0	0	0	0	0	0	0	0	0	0	0	0	0	0	0	0	1	0
	△	↑								↑								↑							
	▽	↓								↓								↓							
	Brighter	0	0	0	0	0	0	0	0	0	0	0	0	0	0	0	0	1	1	1	1	1	1	0	1
	▽	0	0	0	0	0	0	0	0	0	0	0	0	0	0	0	0	1	1	1	1	1	1	1	0
	Blue	0	0	0	0	0	0	0	0	0	0	0	0	0	0	0	0	1	1	1	1	1	1	1	1
Gray Scale of WHITE	Black	0	0	0	0	0	0	0	0	0	0	0	0	0	0	0	0	0	0	0	0	0	0	0	0
	△	0	0	0	0	0	0	0	1	0	0	0	0	0	0	0	1	0	0	0	0	0	0	0	1
	Darker	0	0	0	0	0	0	1	0	0	0	0	0	0	0	1	0	0	0	0	0	0	0	1	0
	△	↑								↑								↑							
	▽	↓								↓								↓							
	Brighter	1	1	1	1	1	1	0	1	1	1	1	1	1	1	0	1	1	1	1	1	1	1	0	1
	▽	1	1	1	1	1	1	1	0	1	1	1	1	1	1	1	0	1	1	1	1	1	1	1	0
	White	1	1	1	1	1	1	1	1	1	1	1	1	1	1	1	1	1	1	1	1	1	1	1	1

One step solution for LCD / PDP / OLED panel application: Datasheet, inventory and accessory! www.panelook.com

Global LCD Panel Exchange Center www.panelook.com 屏库:全球液晶屏交易中心

9.0 POWER SEQUENCE

To prevent a latch-up or DC operation of the LCD module, the power on/off sequence shall be as shown in below

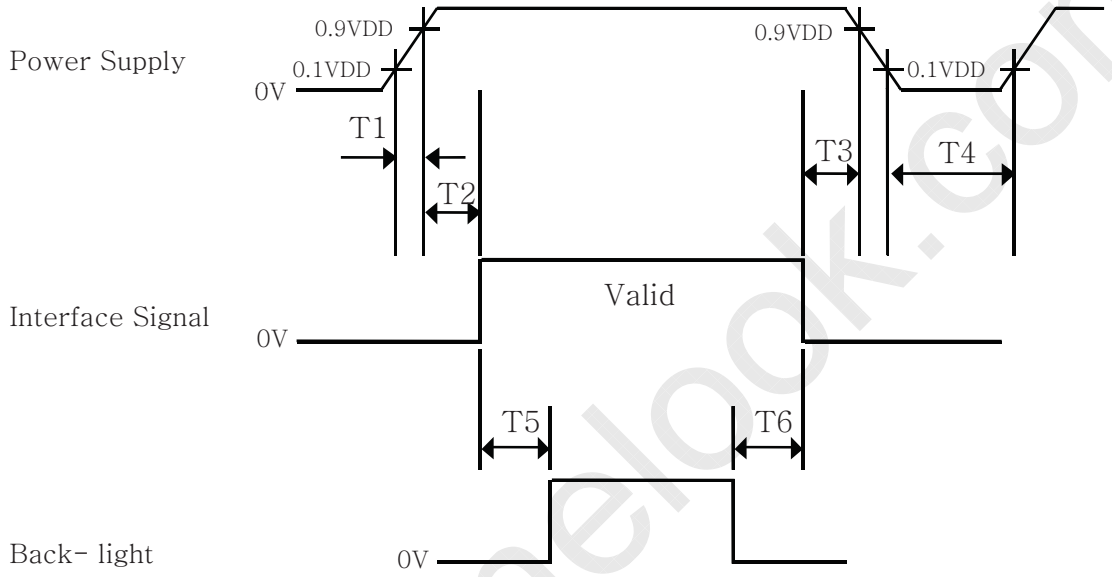

- 0.5 ms ≤ T1 ≤ 10 ms
- 0 ≤ T2 ≤ 50 ms
- 0 ≤ T3 ≤ 50 ms
- 1 sec ≤ T4
- 200 ms ≤ T5
- 200 ms ≤ T6

Notes:

1. When the power supply VDD is 0V, keep the level of input signals on the low or keep high impedance.
2. Do not keep the interface signal high impedance when power is on.
3. Back Light must be turn on after power for logic and interface signal are valid.

One step solution for LCD / PDP / OLED panel application: Datasheet, inventory and accessory! www.panelook.com

Global LCD Panel Exchange Center www.panelook.com 屏库:全球液晶屏交易中心

10.0 MECHANICAL CHARACTERISTICS

10.1 Dimensional Requirements

FIGURE 6 (located in Appendix) shows mechanical outlines for the model HR270WU3-300. Other parameters are shown in Table 5.

<Table 5. Dimensional Parameters>

Parameter	Specification	Unit
Weight	TBD(typ)	gram
Active area	597.888 (H) × 336.312 (V)	mm
Pixel pitch	0.3114 (H) ×0.3114 (V)	mm
Number of pixels	1920 (H)×1080 (V) (1 pixel = R + G + B dots)	pixels

10.2 Mounting

No Mounting

10.3 Anti-Glare and Polarizer Hardness.

The surface of the LCD has an anti-glare coating to minimize reflection and a coating to reduce scratching.

10.4 Light Leakage

There shall not be visible light from the back-lighting system around the edges of the screen as seen from a distance 50cm from the screen with an overhead light level of 350lux.

One step solution for LCD / PDP / OLED panel application: Datasheet, inventory and accessory! www.panelook.com

Global LCD Panel Exchange Center www.panelook.com 屏库:全球液晶屏交易中心

11.0 RELIABLITY TEST

The Reliability test items and its conditions are shown in below.

<Table 6. Reliability Test Parameters >

No	Test Items	Conditions	
1	High temperature storage test	Ta = 60 ℃, 240 hrs	
2	Low temperature storage test	Ta = -20 ℃, 240 hrs	
3	High temperature & high humidity operation test	Ta = 50 ℃, 80%RH, 240hrs	
4	High temperature operation test	Ta = 50 ℃, 240hrs	
5	Low temperature operation test	Ta = -5℃, 240hrs	
6	Thermal shock	Ta = -20 ℃ ↔ 60 ℃ (0.5 hr), 100 cycle	
7	Vibration test (non-operating)	Frequency	Random,10 ~ 300 Hz, 30 min/Axis
		Gravity / AMP	1.5 Grms
		Period	X, Y, Z 30 min
8	Shock test (non-operating)	Gravity	50G
		Pulse width	11msec, sine wave
		Direction	±X, ±Y, ±Z Once for each
9	Electro-static discharge test (non-operating)	Air : 150 pF, 330Ω, 15 KV Contact : 150 pF, 330Ω, 8 KV	

One step solution for LCD / PDP / OLED panel application: Datasheet, inventory and accessory! www.panelook.com

Global LCD Panel Exchange Center www.panelook.com 屏库:全球液晶屏交易中心

12.0 HANDLING & CAUTIONS

(1) Cautions when taking out the module
- Pick the pouch only, when taking out module from a shipping package.

(2) Cautions for handling the module
- As the electrostatic discharges may break the LCD module, handle the LCD module with care. Peel a protection sheet off from the LCD panel surface as slowly as possible.
- As the LCD panel and back - light element are made from fragile glass material, impulse and pressure to the LCD module should be avoided.
- As the surface of the polarizer is very soft and easily scratched, use a soft dry cloth without chemicals for cleaning.
- Do not pull the interface connector in or out while the LCD module is operating.
- Put the module display side down on a flat horizontal plane.
- Handle connectors and cables with care.

(3) Cautions for the operation
- When the module is operating, do not lose CLK, ENAB signals. If any one of these signals is lost, the LCD panel would be damaged.
- Obey the supply voltage sequence. If wrong sequence is applied, the module would be damaged.

(4) Cautions for the atmosphere
- Dew drop atmosphere should be avoided.
- Do not store and/or operate the LCD module in a high temperature and/or humidity atmosphere. Storage in an electro-conductive polymer packing pouch and under relatively low temperature atmosphere is recommended.

(5) Cautions for the module characteristics
- Do not apply fixed pattern data signal to the LCD module at product aging.
- Applying fixed pattern for a long time may cause image sticking.

(6) Other cautions
- Do not disassemble and/or re-assemble LCD module.
- Do not re-adjust variable resistor or switch etc.
- When returning the module for repair or etc., Please pack the module not to be broken. We recommend to use the original shipping packages.

www.panelook.com

One step solution for LCD / PDP / OLED panel application: Datasheet, inventory and accessory! www.panelook.com

Global LCD Panel Exchange Center www.panelook.com 屏库:全球液晶屏交易中心

13.0 PRODUCT SERIAL NUMBER

1		2	3	4		5	6				7					
X	X	X	X	X	X	X	X	X	X	X	X	X	X	X	X	X

1. Control Number
2. Rank / Grade
3. Line Classification
4. Year (2001 : 01, 2002 : 02, ...)
5. Month (1,2,3, ... , 9, X, Y, Z)
6. Internal Use
7. Serial Number

One step solution for LCD / PDP / OLED panel application: Datasheet, inventory and accessory! www.panelook.com

Global LCD Panel Exchange Center www.panelook.com 屏库:全球液晶屏交易中心

14.0 Packing

14.1 Packing Order

Put EPE pad into the EPS box

Place the panel into the box, 15pcs panel per box

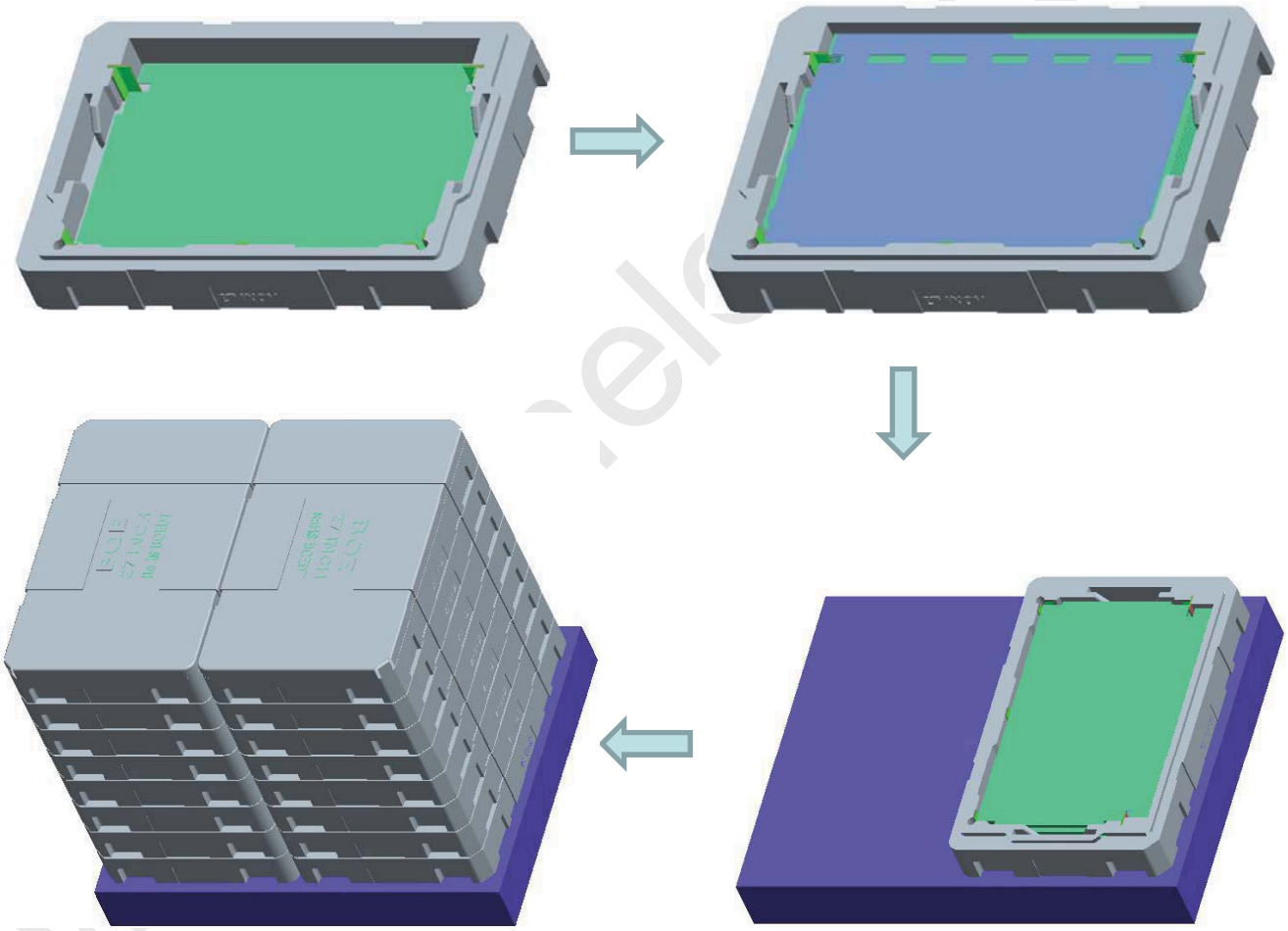

16ea EPS box per pallet

Put the EPS box on the pallet

One step solution for LCD / PDP / OLED panel application: Datasheet, inventory and accessory! www.panelook.com

Global LCD Panel Exchange Center www.panelook.com 屏库:全球液晶屏交易中心

14.2 Packing Note

- Box Dimension : 772mm(W) × 505mm(L) × 110mm(H)

14.3 Box label

- Label Size : 108 mm (L) × 56 mm (W)
- Contents

  Model : HR270WU3-300

  Q`ty : O/C 15 Q`ty in one box

  Serial No. : Box Serial No. See next page for detail description.

  Date : Packing Date

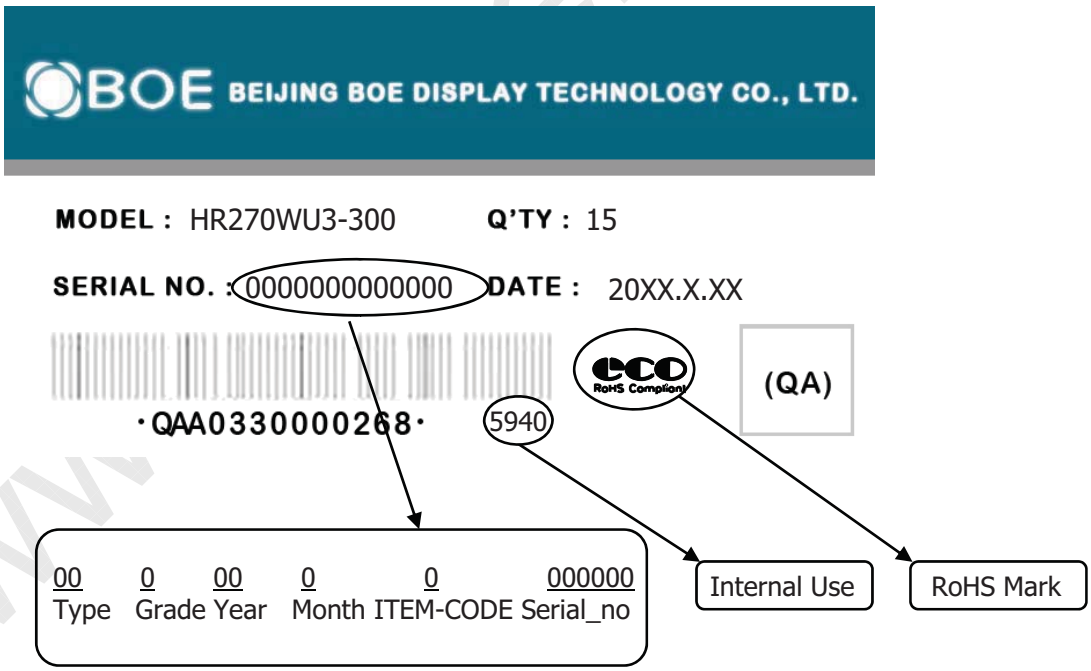

One step solution for LCD / PDP / OLED panel application: Datasheet, inventory and accessory! www.panelook.com

Global LCD Panel Exchange Center www.panelook.com 屏库:全球液晶屏交易中心

15.0 APPENDIX

Figure 1. Measurement Set Up

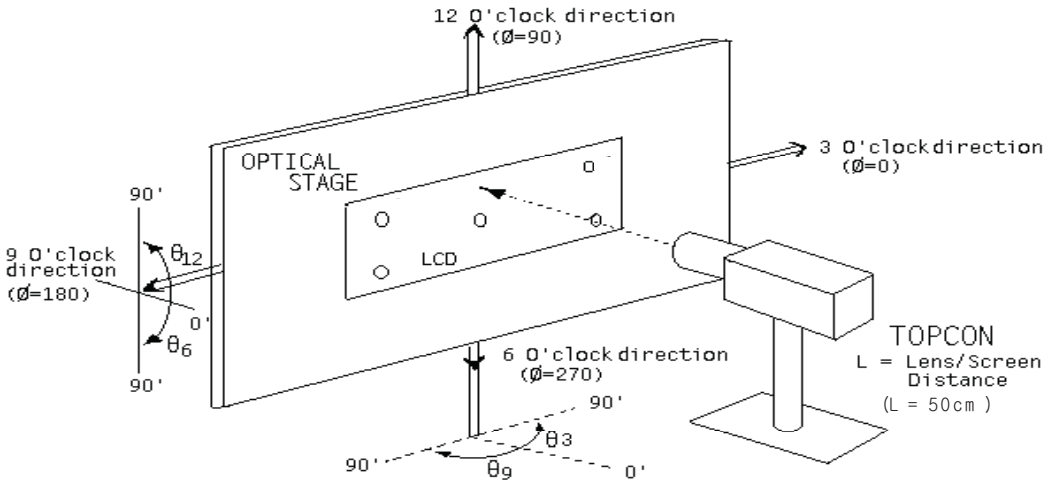

Figure 2. White Luminance and Uniformity Measurement Locations (9 points)

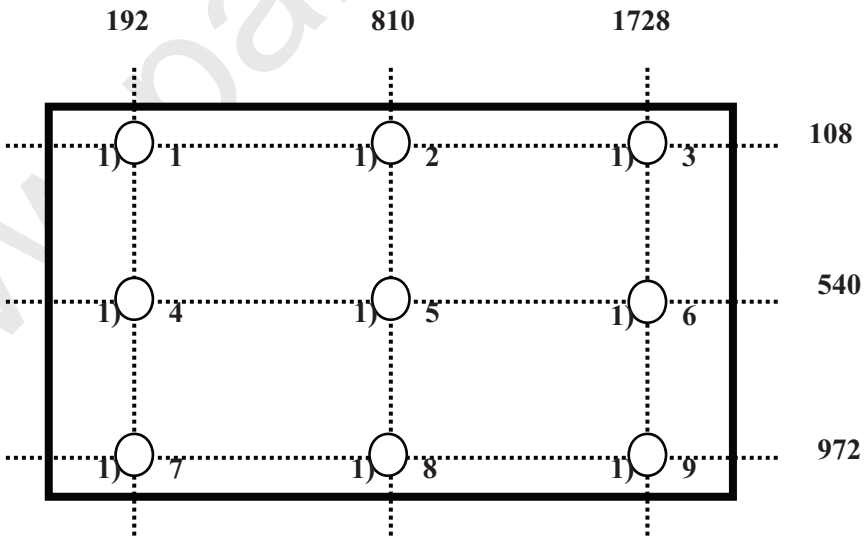

One step solution for LCD / PDP / OLED panel application: Datasheet, inventory and accessory! www.panelook.com

Global LCD Panel Exchange Center www.panelook.com 屏库:全球液晶屏交易中心

Figure 3. Response Time Testing

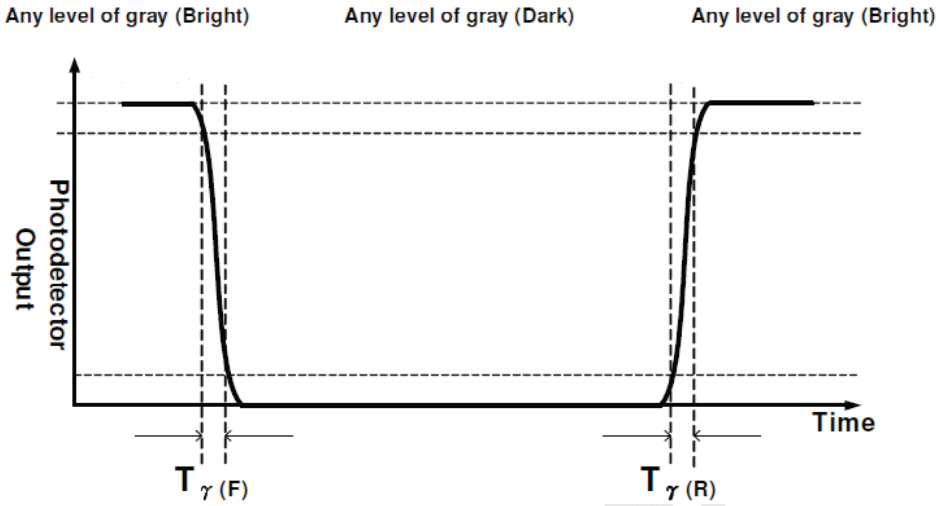

Figure 4. Cross Modulation Test Description

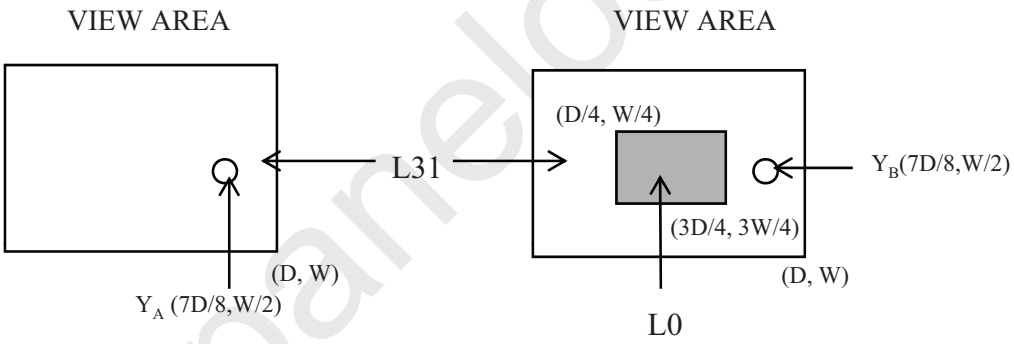

$$\text{Cross-Talk (\%)} = \left| \frac{Y_B - Y_A}{Y_A} \right| \times 100$$

Where: Y_A = Initial luminance of measured area (cd/m^2)
Y_B = Subsequent luminance of measured area (cd/m^2)
The location measured will be exactly the same in both patterns

One step solution for LCD / PDP / OLED panel application: Datasheet, inventory and accessory! www.panelook.com

Global LCD Panel Exchange Center www.panelook.com 屏库:全球液晶屏交易中心

Figure 5. TFT-LCD Module Outline Dimensions (Front view)

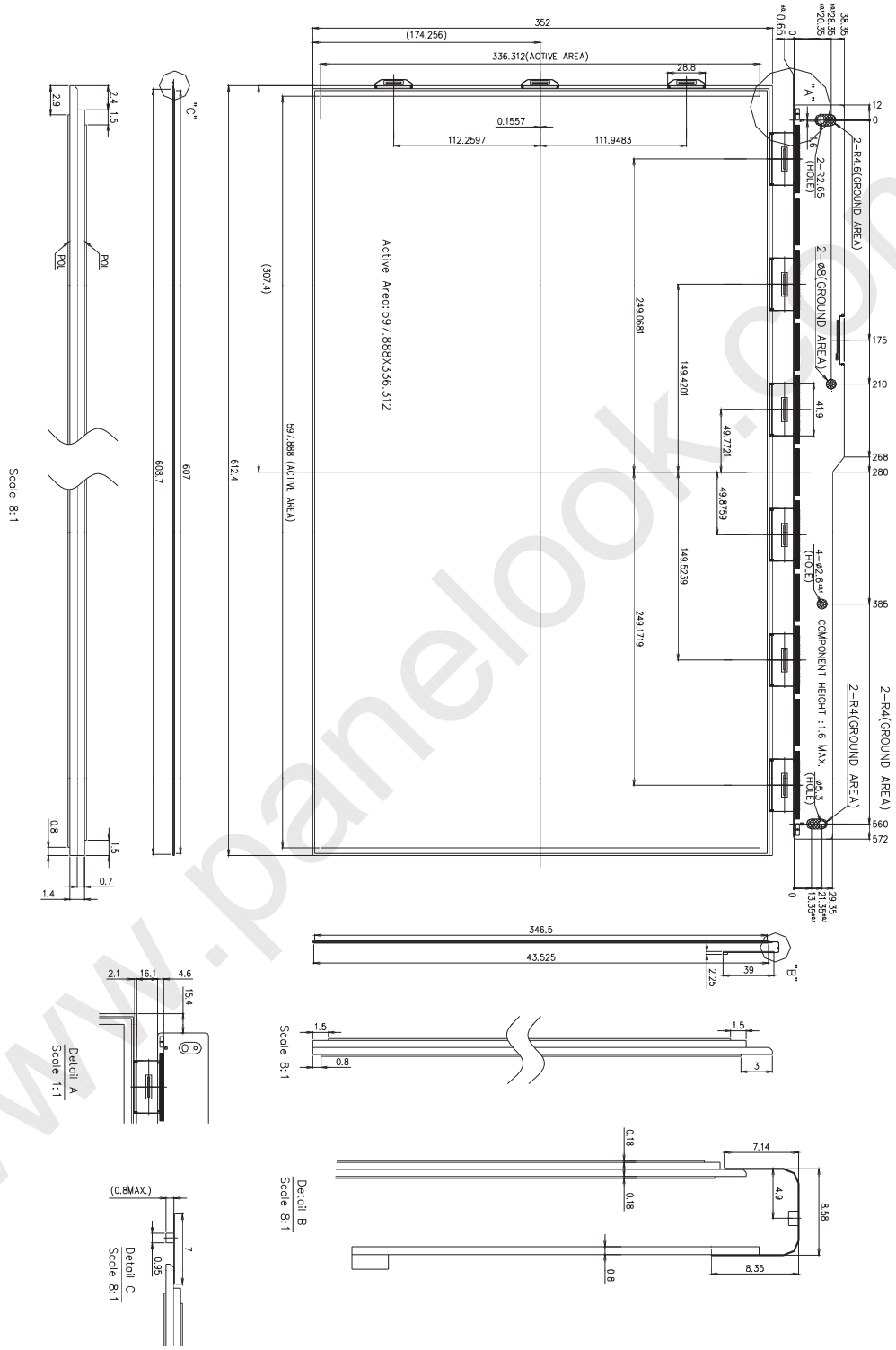

One step solution for LCD / PDP / OLED panel application: Datasheet, inventory and accessory! www.panelook.com