HM50256 Series

262144-word × 1-bit Dynamic Random Access Memory

■ FEATURES

- Industry Standard 16-Pin DIP, 18-Pin PLCC, 16-Pin ZIP
- Single 5V (±10%)
- On chip substrate bias generator
- Low Power: 350mW active, 20mW standby
- High speed: Access Time 120ns/150ns/200ns(max.)
- Common I/O capability using early write operation
- Page mode capability
- TTL compatible
- 256 refresh cycles · · · (4ms)
- 3 variations of refresh · · · $\overline{RAS}$ only refresh, $\overline{CAS}$ before $\overline{RAS}$ refresh, Hidden refresh

HM50256P Series

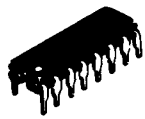

(DP-16B)

HM50256CP Series

(CP-18)

HM50256ZP Series

(ZP-16)

■ ORDERING INFORMATION

Type No.	Access Time	Package
HM50256P-12 HM50256P-15 HM50256P-20	120ns 150ns 200ns	300 mil 16 pin Plastic DIP
HM50256ZP-12 HM50256ZP-15 HM50256ZP-20	120ns 150ns 200ns	16 pin Plastic ZIP
HM50256CP-12 HM50256CP-15 HM50256CP-20	120ns 150ns 200ns	18 pin PLCC

www.DataSheet4U.com

■ PIN ARRANGEMENT

● HM50256P Series ● HM50256CP Series ● HM50256ZP Series

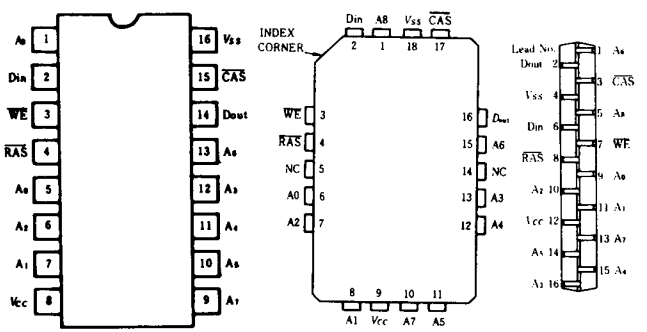

(Top View) (Top View) (Bottom View)

■ PIN DESCRIPTION

A_0~A_8	Address Inputs
$\overline{CAS}$	Column Address Strobe
Din	Data In
Dout	Data Out
$\overline{RAS}$	Row Address Strobe
$\overline{WE}$	Read/Write Input
V_{CC}	Power (+5V)
V_{SS}	Ground
A_0~A_7	Refresh Address Inputs

www.DataSheet4U.com

■BLOCK DIAGRAM

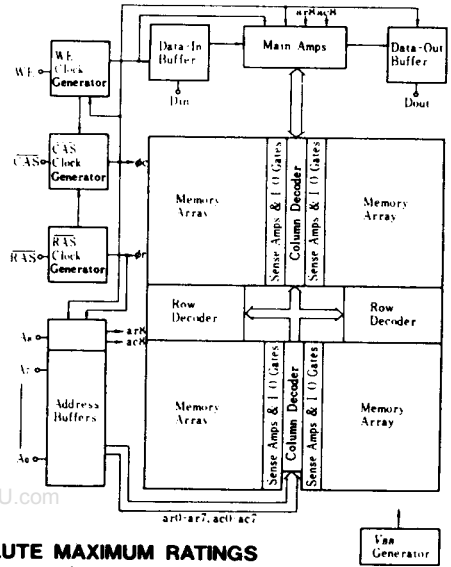

www.DataSheet4U.com

■ABSOLUTE MAXIMUM RATINGS

Voltage on any pin relative to V_{SS} . . . . . −1V to +7V
Operating temperature, Ta (Ambient) . . . . . 0°C to +70°C
Storage temperature . . . . . −55°C to +125°C
Short circuit output current 50mA
Power dissipation 1W

■RECOMMENDED DC OPERATING CONDITIONS (Ta=0 to +70°C)

Parameter	Symbol	min	typ	max	Unit	Note
Supply Voltage	V_{CC}	4.5	5.0	5.5	V	1
Input High Voltage	V_{IH}	2.4	—	6.5	V	1
Input Low Voltage	V_{IL}	−1.0	—	0.8	V	1

Note) 1. All voltages referenced to V_{SS}

■DC ELECTRICAL CHARACTERISTICS (Ta=0 to +70°C, V_{CC}=5V±10%, V_{SS}=0V)

Parameter	Symbol	HM50256-12		HM50256-15		HM50256-20		Unit	Notes
		min	max	min	max	min	max		
Operating Current($\overline{RAS}$, $\overline{CAS}$ =Cycling : t_{RC}=min)	I_{CC1}	—	83	—	70	—	55	mA	1
Standby Current($\overline{RAS}$=V_{IH}, Dout=High Impedance)	I_{CC2}	—	4.5	—	4.5	—	4.5	mA	
Refresh Current($\overline{RAS}$ only Refresh, t_{RC}=min)	I_{CC3}	—	62	—	53	—	42	mA	
Standby Current($\overline{RAS}$=V_{IH}, Dout =Enable)	I_{CC5}	—	10	—	10	—	10	mA	1
Refresh Current($\overline{CAS}$ before $\overline{RAS}$ Refresh, t_{RC}=min)	I_{CC6}	—	69	—	58	—	45	mA	
Page Mode Supply Current($\overline{RAS}$=V_{IL}, $\overline{CAS}$ =Cycling, t_{PC}=min)	I_{CC7}	—	57	—	48	—	37	mA	
Input leakage(0<V_{in}<7V)	I_{LI}	−10	10	−10	10	−10	10	μA	
Output leakage(0<V_{out}<7V, Dout=Disable)	I_{LO}	−10	10	−10	10	−10	10	μA	
Output levels High(I_{out}=−5mA)	V_{OH}	2.4	V_{CC}	2.4	V_{CC}	2.4	V_{CC}	V	
Output levels Low(I_{out}=4.2mA)	V_{OL}	0	0.4	0	0.4	0	0.4	V	

Notes) 1. I_{CC} depends on output loading condition when the device is selected. I_{CC} max is specified at the output open condition.

www.DataSheet4U.com

■CAPACITANCE (V_{CC} = 5V ± 10%, Ta = 25°C)

Parameter		Symbol	typ	max	Unit	Notes
Input Capacitance	Address, Data-in	C_{I1}	—	5	pF	1
	Clocks	C_{I2}	—	7		1, 2
Output Capacitance	Data-out	C_O		7		1, 2

Notes) 1. Capacitance measured with Boonton Meter or effective capacitance measuring method.
2. $\overline{CAS}$ = V_{IH} to disable Dout.

■ELECTRICAL CHARACTERISTICS AND RECOMMENDED AC OPERATING CONDITIONS

(Ta = 0 to +70°C, V_{CC} = 5V ± 10%, V_{SS} = 0V) [1), 10), 11)]

Parameter	Symbol	HM50256-12		HM50256-15		HM50256-20		Unit	Notes
		min	max	min	max	min	max		
Random Read or Write Cycle Time	t_{RC}	220	-	260		330	-	ns	
Read-Write Cycle Time	t_{RWC}	265		310	-	390		ns	
$\overline{RAS}$ to $\overline{CAS}$ Delay Time	t_{RCD}	25	60	25	75	30	100	ns	7
Access Time from $\overline{RAS}$	t_{RAC}	-	120	-	150		200	ns	2, 3
Access Time from $\overline{CAS}$	t_{CAC}		60		75	-	100	ns	3, 4
Output Buffer Turn-off Delay	t_{OFF}	-	30		40		50	ns	5
Transition Time (Rise and Fall)	t_T	3	50	3	50	3	50	ns	6
$\overline{RAS}$ Precharge Time	t_{RP}	90		100	-	120		ns	
$\overline{RAS}$ Pulse Width	t_{RAS}	120	10000	150	10000	200	10000	ns	
$\overline{RAS}$ Hold Time	t_{RSH}	60		75	-	100		ns	
$\overline{CAS}$ Hold Time	t_{CSH}	120		150		200		ns	
$\overline{CAS}$ Pulse Width	t_{CAS}	60	10000	75	10000	100	10000	ns	
$\overline{CAS}$ to $\overline{RAS}$ Precharge Time	t_{CRP}	10		10		10		ns	
Row Address Set-up Time	t_{ASR}	0		0	-	0	-	ns	
Row Address Hold Time	t_{RAH}	15		15		20	-	ns	
Column Address Set-up Time	t_{ASC}	0		0		0	—	ns	
Column Address Hold Time	t_{CAH}	20		25		30	-	ns	
Column Address Hold Time referenced to $\overline{RAS}$	t_{AR}	80		100		130		ns	
Read Command Set-up Time	t_{RCS}	0		0		0		ns	
Read Command Hold Time referenced to $\overline{CAS}$	t_{RCH}	0	—	0		0	-	ns	
Write Command Set-up Time	t_{WCS}	0	-	0		0		ns	8
Write Command Hold Time	t_{WCH}	40		45		55	-	ns	
Write Command Hold Time referenced to $\overline{RAS}$	t_{WCR}	100		120		155		ns	
Write Command Pulse Width	t_{WP}	40	-	45		55		ns	
Write Command to $\overline{RAS}$ Lead Time	t_{RWL}	40		45		55	-	ns	
Write Command to $\overline{CAS}$ Lead Time	t_{CWL}	40	-	45	-	55	—	ns	
Data-in Set-up Time	t_{DS}	0	-	0	-	0		ns	9
Data-in Hold Time	t_{DH}	40		45		55		ns	8, 9
Data-in Hold Time referenced to $\overline{RAS}$	t_{DHR}	100	-	120	-	155		ns	
$\overline{RAS}$ to $\overline{WE}$ Delay	t_{RWD}	120	-	150	-	200	-	ns	
$\overline{CAS}$ to $\overline{WE}$ Delay	t_{CWD}	60		75	—	100		ns	8
Page Mode Read or Write Cycle	t_{PC}	120		145	-	190		ns	
Page Mode Read Modify Write Cycle	t_{PCM}	165	-	195	-	250	-	ns	
$\overline{CAS}$ Precharge Time, Page Cycle	t_{CP}	50		60	-	80	-	ns	
Read Command Hold Time referenced to $\overline{RAS}$	t_{RRH}	10	-	10	-	10		ns	
Refresh Period	t_{REF}		4		4		4	ms	
$\overline{CAS}$ Set-up Time	t_{CSR}	10		10		10		ns	
$\overline{CAS}$ Hold Time ($\overline{CAS}$ before $\overline{RAS}$ Refresh)	t_{CHR}	120		150	-	200		ns	
$\overline{RAS}$ Precharge to $\overline{CAS}$ Hold Time	t_{RPC}	0	-	0	-	0	-	ns	

www.DataSheet4U.com

Notes

1. AC measurements assume t_T = 5ns.
2. Assumes that $t_{RCD} \leq t_{RCD}$ (max). If t_{RCD} is greater than the maximum recommended value shown in this table, t_{RAC} exceeds the value shown.
3. Measured with a load circuit equivalent to 2TTL loads and 100pF.
4. Assumes that $t_{RCD} \geq t_{RCD}$ (max).
5. t_{OFF} (max) is defined as the time at which the output achieves the open circuit condition and output voltage levels are not referred.
6. V_{IH} (min) and V_{IL} (max) are reference levels for measuring timing of input signals. Also, transition times are measured between V_{IH} and V_{IL}.
7. Operation with the t_{RCD} (max) limit insures that t_{RAC} (max) can be met, t_{RCD} (max) is specified as a reference point only; if t_{RCD} is greater than the specified t_{RCD} (max) limit, access time is controlled exclusively by t_{CAC}.
8. t_{WCS}, t_{CWD} and t_{RWD} are not restrictive operating parameters.
   They are included in the data sheet as electrical characteristics only; if $t_{WCS} \geq t_{WCS}$ (min), the cycle is an early write cycle and the data output pin will remain open circuit (high impedance) throughout the entire cycle; if $t_{CWD} \geq t_{CWD}$ (min) and $t_{RWD} \geq t_{RWD}$ (min), the cycle is a read-write and the data output will contain data read from the selected cell; if neither of the above sets of conditions is satisfied the condition of the data out (at access time) is indeterminate.
9. These parameters are referenced to $\overline{CAS}$ leading edge in early write cycles and to $\overline{WE}$ leading edge in delayed write or read-modify-write cycles.
10. An initial pause of 100μs is required after power-up then execute at least 8 initialization cycles.
11. At least, 8 $\overline{CAS}$ before $\overline{RAS}$ refesh cycles are required before using internal refresh counter.

www.DataSheet4U.com

■ TIMING WAVEFORMS

● READ CYCLE

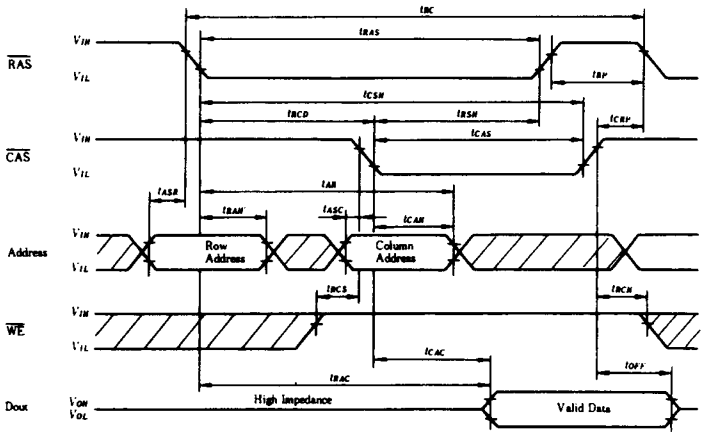

Note) ▨ : Don't care

www.DataSheet4U.com

● WRITE CYCLE

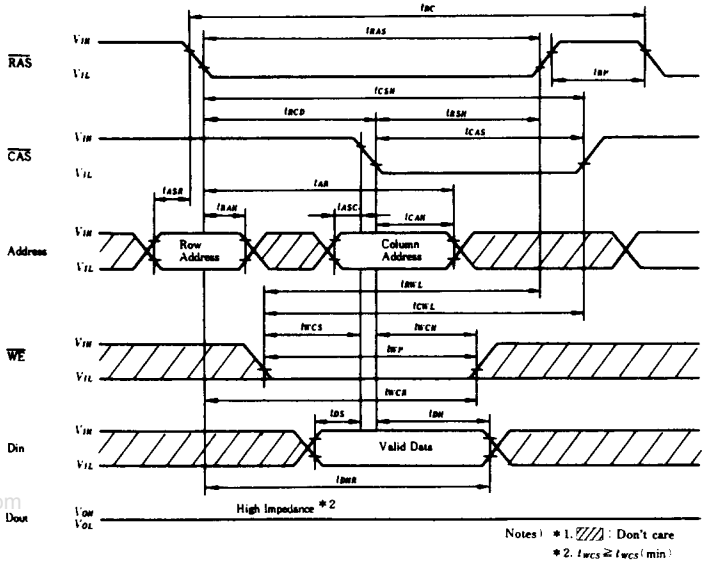

www.DataSheet4U.com

● READ MODIFY WRITE CYCLE

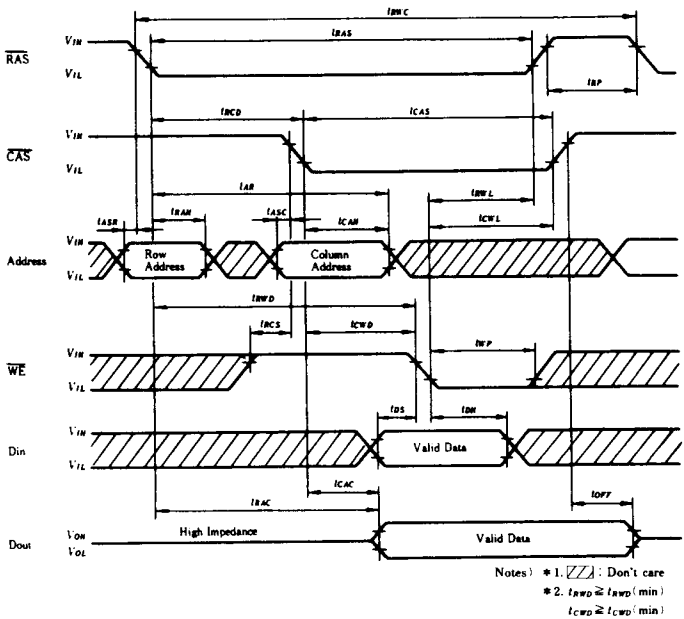

www.DataSheet4U.com

● $\overline{RAS}$ ONLY REFRESH CYCLE

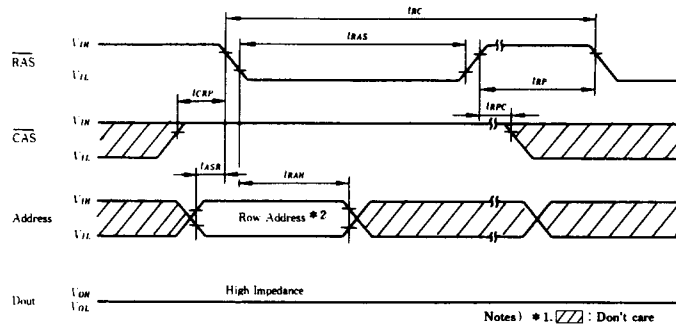

Notes) *1. ▨ : Don't care
*2. Refresh Address A0-A7(AX0-AX7)

● HIDDEN REFRESH CYCLE

www.DataSheet4U.com

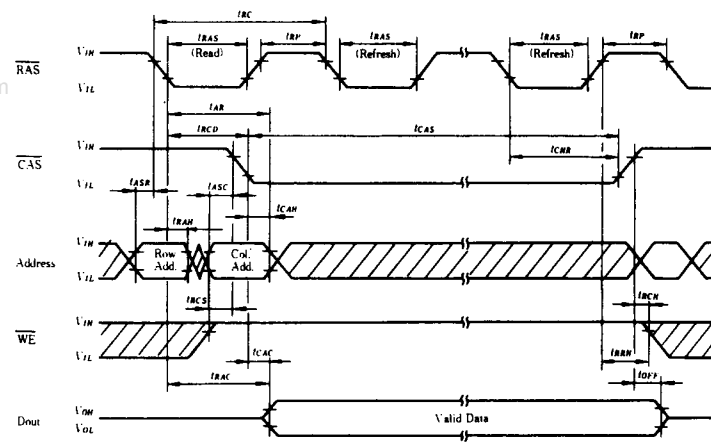

Note) ▨ : Don't care

● $\overline{CAS}$ BEFORE $\overline{RAS}$ REFRESH CYCLE

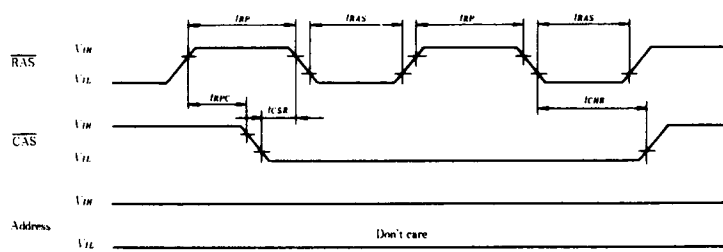

www.DataSheet4U.com

● COUNTER TEST

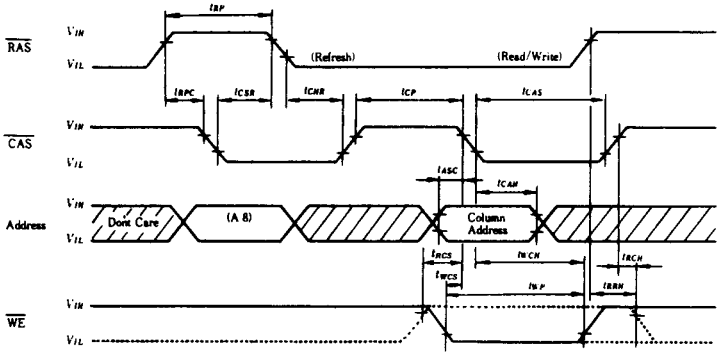

Notes) *1. ▨ : Don't care
*2. Dotted Line Means Read Cycle.

● PAGE MODE READ CYCLE

www.DataSheet4U.com

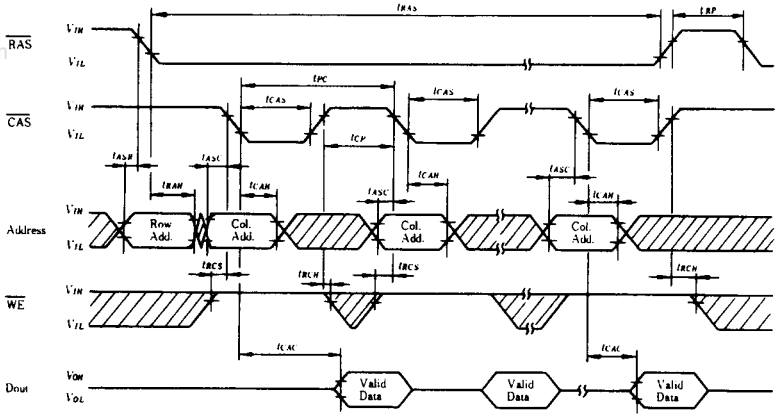

Note) ▨ : Don't care

www.DataSheet4U.com

● PAGE MODE WRITE CYCLE

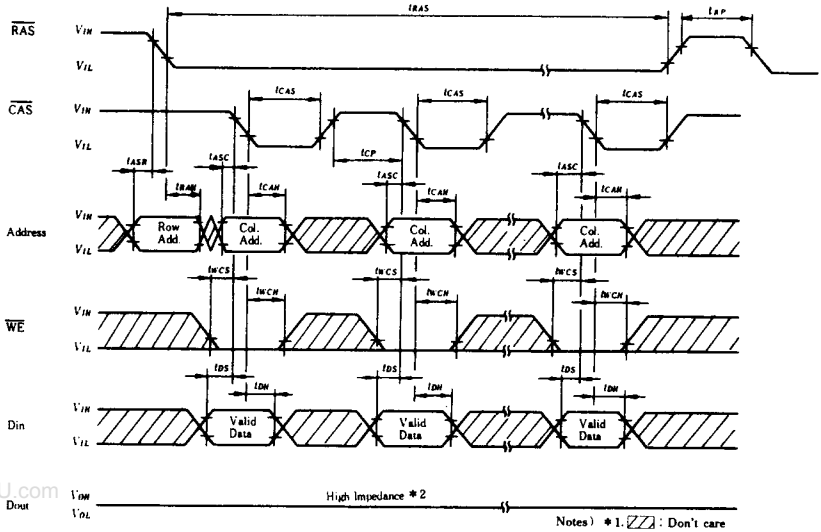

Notes) *1. ▨ : Don't care
*2. $t_{WCS} \geqq t_{WCS}$(min)

www.DataSheet4U.com

● PAGE MODE READ MODIFY WRITE CYCLE

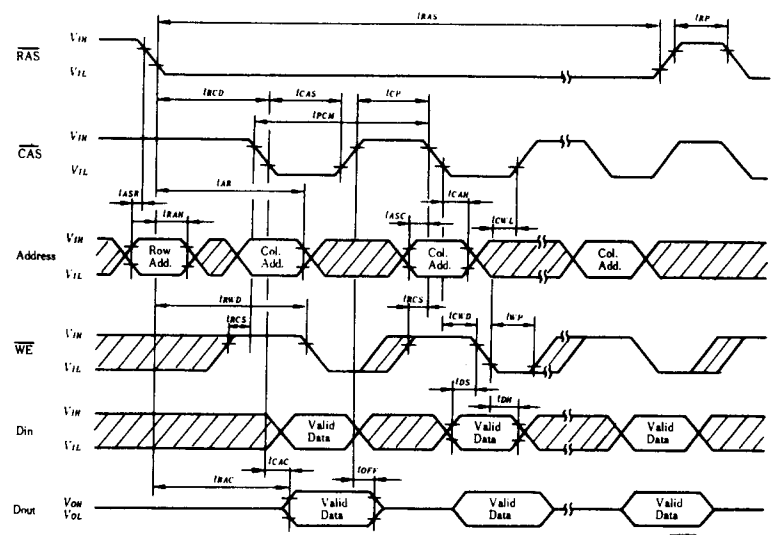

Notes) *1. ▨ : Don't care
*2. $t_{RWD} \geqq t_{RWD}$(min)
$t_{CWD} \geqq t_{CWD}$(min)

www.DataSheet4U.com