REV.	CHANGE CONTENT	BY	DATE

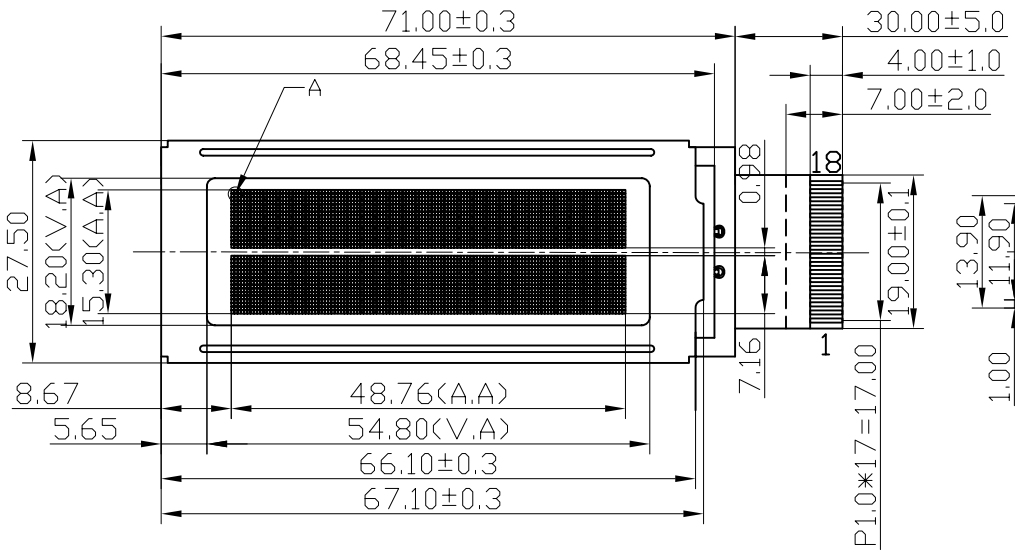

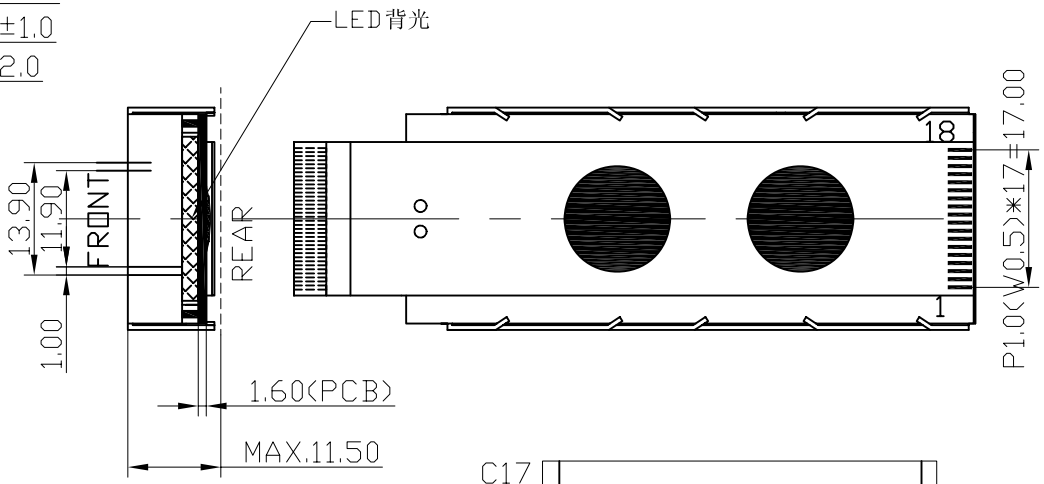

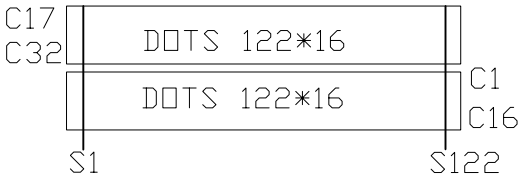

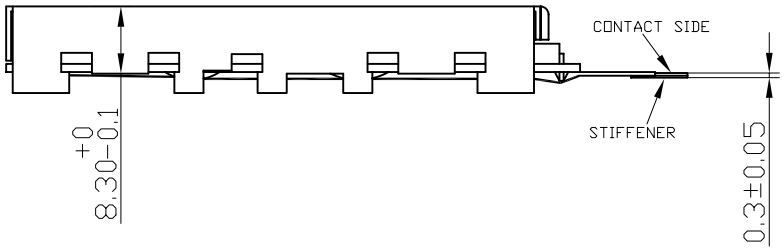

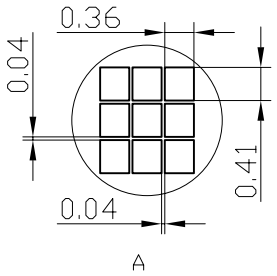

连线定义表

LCD	IC
C1~C16	IC1:C0~C15
S1,S61	IC1:S0~S60
C17~C32	IC2:C15~C0
S62,S122	IC2:S0~S60

NOTE:

1. DISPLAY TYPE: FSTN-POSITIVE-TRANSFLECTIVE
2. DRIVE METHOD: 1/32 DUTY, 1/5 BIAS, 5V VDD
3. VIEWING DIR.: 6:00
4. OP. TEMP.: -20°C~70°C
5. ST. TEMP.: -30°C~80°C
6. BACKLIGHT: LED(WHITE), Vf 5.0±0.2V, If 30mA(Max.)
7. DRIVER IC:NJU6450 OR EQU.

PIN	1	2	3	4	5	6	7	8	9	10	11	12	13	14	15	16	17	18
SYMBOL	VDD	VSS	V0	RST	E1	E2	R/W	A0	DB0	DB1	DB2	DB3	DB4	DB5	DB6	DB7	A	K

TOLERANCE								
>0~6 ±0.10	HTDISPLAY CO., LTD.						DRAWING No. : HG1223221C-FF62L-VA	
>6~80 ±0.20							DRAWING TITLE: LCM DRAWING	
							FILE NO.: 8	
>80~240 ±0.30	DESIGN	ZOUYS	06.12.21	STANDARD			REV. : A	SCALE : -
>240~400 ±0.50	CHECKED			TECHNOLOGY			PROJECTION:	UNIT : mm
// ⊥ ◎ ±0.10	APPROVED			Q.A				SHEET : 1/1

www.DataSheet4U.com