GM163200 160 x 32 dots STN Reflective / LED Backlight / EL Backlight

DIMENSIONAL DATA

Item	Measurement (W) x (H) x (T)	Unit
Module Dimension	116 x 44 x 10.5 Max. (Reflective)	mm
Viewing Area	99.0 x 24.0	mm
Dot Pitch	0.59 x 0.59	mm
Dot Size	0.55 x 0.55	mm
Weight 60		g
Controller/Driver	KS0107/SED1521DAA	

ABSOLUTE MAXIMUM RATINGS

Item	Symbol	Condition	Min.	Max.	Unit
Supply Voltage (Logic)	V_{DD} - V_{SS}	0		8.0	V
Supply Voltage(LCD)	V_{DD} - V_{EE}	0		16.5	V
Input Voltage	V_I	Ta = 25 C	V_{SS}-0.3	V_{DD} +0.3	V
Operating Temp. T	opr		0	50	C
Storage Temp.	Tstg		-20	70	C

ELECTRICAL CHARACTERISTIC

Item	Symbol	Condition	Value			Unit
			Min.	Typ.	Max.	
Supply Voltage (Logic)	V_{DD}-V_{SS}	--	4.5	5.0	5.5	V
Supply Voltage (LCD)	V_{DD}-V_O	--	--	6.9	--	V
Supply Current	I_{DD}	--	3.6	3.8	5.0	mA
	I_{EE}	- -	1.4	1.45	2.0	mA
Input Voltage "H" Level	V_{IH}	High Level	0.7V_{DD}	--	V_{DD}	V
Input Voltage "L" Level	V_{IL}	Low Level	V_{SS}	- -	0.3V_{DD}	V
Frame Frequency	F_f	Ta = 25 C	--	70	--	Hz
Viewing Angle	1 - 2	Ta = 25 C	--	-2 5	--	Deg.
	1. 2	CR 1.5	--	5 0	--	
LED Forward Voltage		I=310mA	--	4.2	4.6	V

PIN ASSIGNMENT

Pin	Symbol	Level	Function
1	AO	H/L	Instructions (L) or Data (H)
2	/CS2	H/L	Chip Select for IC2,Active LOW
3	/CS1	H/L	Chip Select for IC1,Active LOW
4	/RD (E)	H/L	/RD for 80 Serial, E for 68 Serial
5	/WR(R/W)	H/L	/WR for 80 Serial ,R/W for 68 Serial
6	V_{DD}	--	+5V
7	V_{SS}	- -	Ground (0V)
8	DB0	H/L	Data Bus Line
9	DB1	H/L	
10	DB2	H/L	
11	DB3	H/L	
12	DB4	H/L	
13	DB5	H/L	
14	DB6	H/L	
15	DB7	H/L	
16	RES	H/L	H to L =80 Serial, L to H =60 Serial
17	V_O	--	Power Supply for LCD Drive
18	V_{EE}	--	Negative Voltage Output
19	LEDA	+	Power Supply for LED Backlight
20	LEDK	-	

OUTLINE DIMENSION

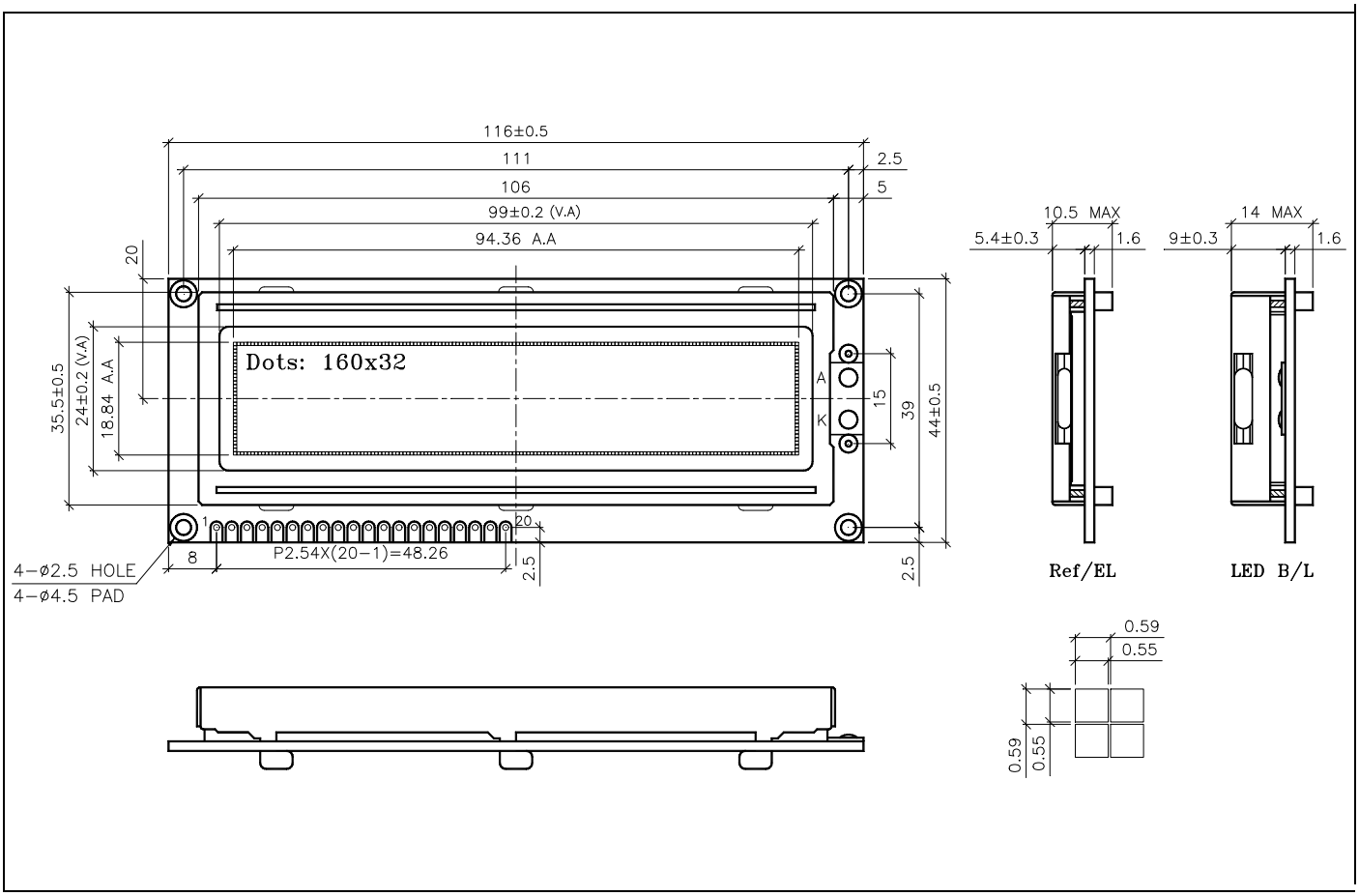

Rte de Vevey 105 , CH-1618 Châtel St.-Denis, Tel: +41 21 948 20 80, Fax: +41 21 948 20 88

E-Mail: optologic-office@optologic.ch - Web-Site: www.optologic.ch