AOZ2223QI

36V/8A Synchronous EZBuck™ Regulator

General Description

The AOZ2223QI is a high-efficiency, easy-to-use DC/DC synchronous buck regulator that operates up to 36V. The device is capable of supplying 8A of continuous output current with an output voltage adjustable from 0.8V to 16V.

The AOZ2223QI integrates an internal linear regulator to generate 5.3V (±5%) VCC from input power or external bias power. If bias voltage is higher than 4.8V, the input voltage of linear regulator switches to the bias for power saving. When the input voltage of linear regulator is lower than 5.3V, the linear regulator operates at low drop-output mode; the VCC voltage is equal to input voltage minus the drop-output voltage of internal linear regulator.

A proprietary constant on-time PWM control with input feed-forward results in ultra-fast transient response while maintaining relatively constant switching frequency over the entire input voltage range.

The device features multiple protection functions such as V_{CC} under-voltage lockout, cycle-by-cycle current limit, output over-voltage protection, short-circuit protection, and thermal shutdown.

The AOZ2223QI is available in a 4mm×4mm QFN-23L package and is rated over a -40°C to +85°C ambient temperature range.

Features

- Wide input voltage range
  - 4.8V to 36V Connect BIAS to an external bias (>5V)
  - 6.5V to 36V (Connect BIAS to V_{OUT} if V_{OUT}>5V)
- 8A continuous output current
- Output voltage adjustable from 0.8V to 16V.
- Low RDS(ON) internal NFETs
  - 20mΩ high-side
  - 10mΩ low-side
- Constant On-Time with input feed-forward
- Ceramic capacitor stable
- Adjustable soft start
- Integrated bootstrap diode
- Cycle-by-cycle current limit
- Short-circuit protection
- Thermal shutdown
- Thermally enhanced 4mm x 4mm QFN-23L package

Applications

- General-purpose wide VIN applications
- Industrial distributed power applications
- 12-V and 24-V Industrial and communications power systems
- USB dedicated charging ports and battery chargers
- Industrial automation and motor control
- Point of load dc/dc converters
- USB type-C
- Test and measurement

Green Product

Typical Application (a). Output>5V, connect output to BIAS

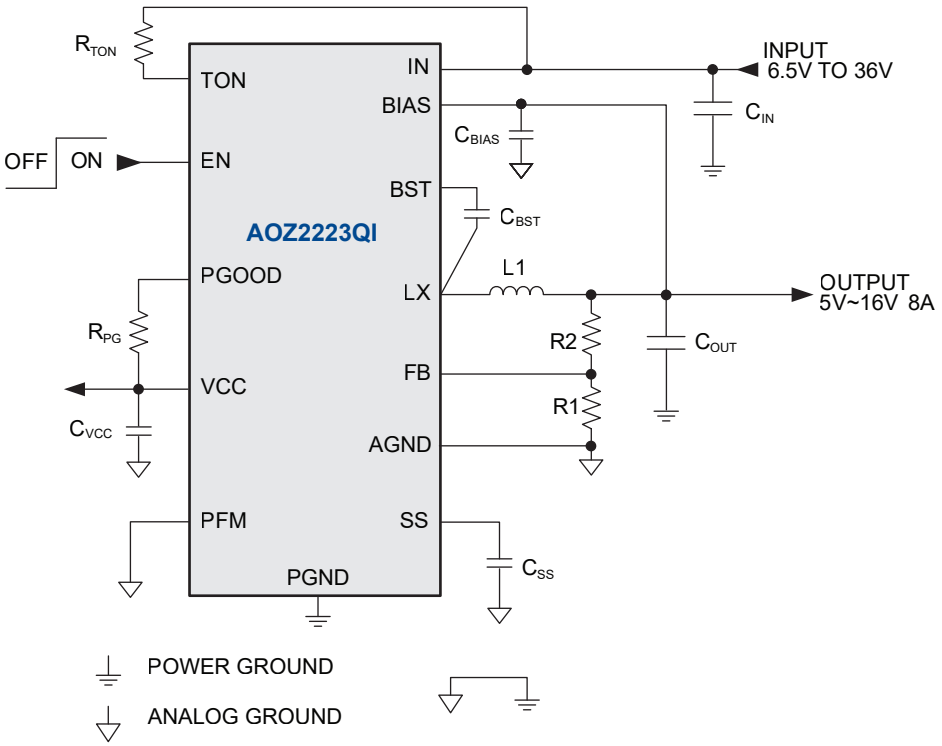

Typical Application (b). Connect to external BIAS or NC

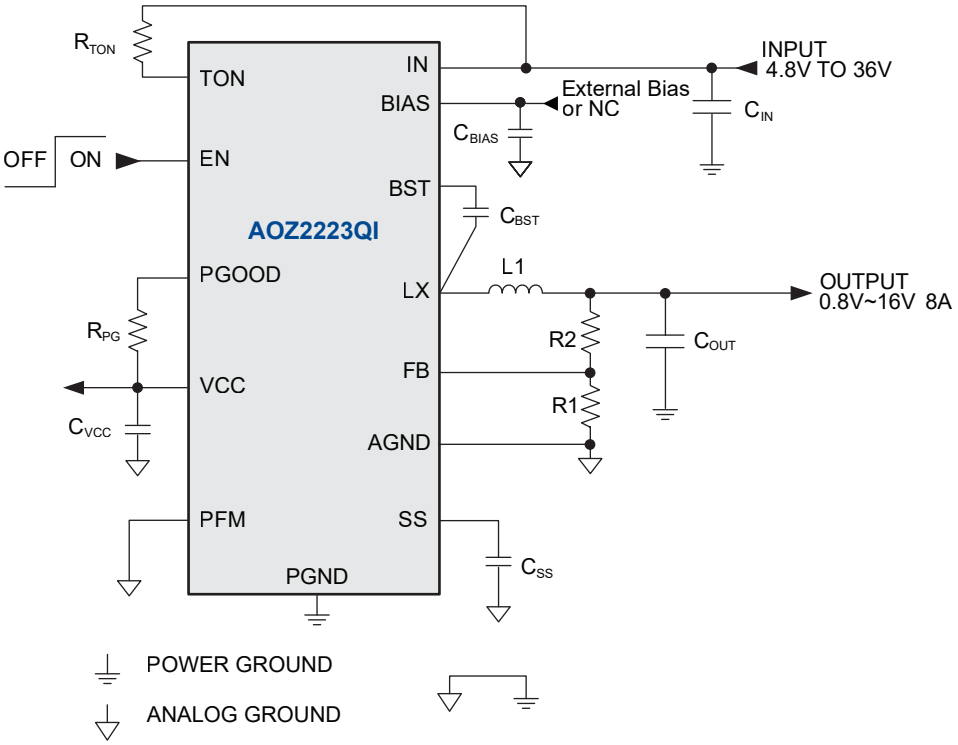

Ordering Information

Part Number	Temperature Range	Package	Environmental
AOZ2223QI	-40°C to +85°C	23-Pin 4×4 QFN	Green

AOS products are offered in packages with Pb-free plating and compliant to RoHS standards.
Please visit www.aosmd.com/media/AOSGreenPolicy.pdf for additional information.

Pin Configuration

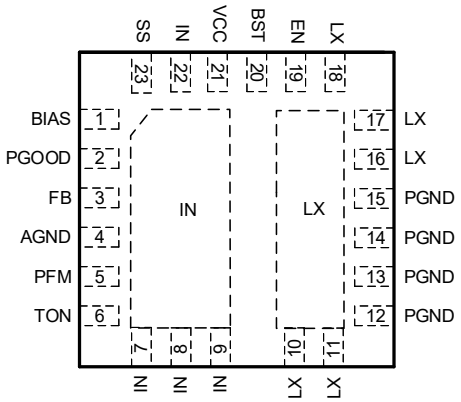

AOZ2223QI
23-pin 4mm x 4mm QFN

Pin Description

Pin Number	Pin Name	Pin Function
1	BIAS	LDO switching-over input. Connect this pin to output when V_{OUT}≥5V, or connect this pin to external 5V power supply for saving LDO power loss. Bypass BIAS to AGND with a 1µF ceramic capacitor. Place the capacitor close to BIAS pin.
2	PGOOD	Power Good Signal Output. PGOOD is an open-drain output used to indicate the status of the output voltage. It is internally pulled low when the output voltage is 15% lower than the nominal regulation voltage for or 20% higher than the nominal regulation voltage. PGOOD is pulled low during soft-start and shut down.
3	FB	Feedback Input. Adjust the output voltage with a resistive voltage-divider between the regulator's output and AGND.
4	AGND	Analog Ground.
5	PFM	PFM/PWM Mode Selection pin.
6	TON	On-time Setting Input. Connect a resistor between VIN and TON to set the on-time.
7, 8, 9, 22	IN	Supply Input. IN is the regulator input. All IN pins must be connected together.
10, 11, 16,17,18	LX	Switching Node.
12, 13, 14, 15	PGND	Power Ground.
19	EN	Enable Input. The AOZ2223QI is enabled when EN is pulled high. The device shuts down when EN is pulled low.
20	BST	Bootstrap Capacitor Connection. The AOZ2223QI includes an internal bootstrap diode. Connect an external capacitor between BST and LX as shown in Typical Application diagram.
21	VCC	Supply Input for analog functions. Bypass VCC to AGND with a 4.7µF~10µF ceramic capacitor. Place the capacitor close to VCC pin.
23	SS	Soft-Start Time Setting Pin. Connect a capacitor between SS and AGND to set the soft-start time.

Absolute Maximum Ratings

Exceeding the Absolute Maximum ratings may damage the device.

Parameter	Rating
IN to AGND	-0.3V to 42V
BIAS, TON, EN, LX to AGND(1)	-0.3V to 40V
BST to AGND	-0.3V to 46V
SS, PGOOD, FB, VCC, PFM to AGND	-0.3V to 6V
PGND to AGND	-0.3V to +0.3V
Junction Temperature (T_J)	+150°C
Storage Temperature (T_S)	-65°C to +150°C
ESD Rating(2)	2kV

Notes:
1. Devices are inherently ESD sensitive, handling precautions are required. Human body model rating: 1.5KΩ in series with 100pF.
2. LX to PGND Transient (t<20ns) ------- -7V to Vin+7V.

Recommended Operating Conditions

The device is not guaranteed to operate beyond the Maximum Recommended Operating Conditions.

Parameter	Rating
Supply Voltage (VIN)	4.8V to 36V
External BIAS	5V to 36V
Output Voltage Range	0.8V to 16V
Ambient Temperature (TA)	-40°C to +85°C
Package Thermal Resistance (θ_{JA}) (θ_{JC})	 32°C/W 4°C/W

Electrical Characteristics

T_A = 25°C, V_{IN}=24V, EN = 5V, unless otherwise specified. Specifications in **BOLD** indicate a temperature range of -40°C to +85°C.

Symbol	Parameter	Conditions	Min	Typ	Max	Units
V_{IN}	IN Supply Voltage	BIAS>5V BIAS=NC	**4.8** **6.5**		**36**	V
V_{UVLO}	Under-Voltage Lockout Threshold of VCC	V_{CC} rising V_{CC} falling	 **3.2**	**4.0** **3.7**	**4.4**	V
I_q	Quiescent Supply Current of IN	PFM Mode, V_{OUT}=BIAS=5V PFM Mode, V_{OUT}=5V, BIAS=NC		**0.14** **0.32**		mA
I_{OFF}	Shutdown Supply Current	V_{IN} = 28V, V_{EN} = 0V		**45**		µA
V_{FB}	Feedback Voltage	T_A = 25°C T_A = 0°C to 85°C	0.792 0.788	0.800 0.800	0.808 0.812	V
I_{FB}	FB Input Bias Current			200		nA
Enable						
V_{EN}	EN Input Threshold	Off threshold On threshold	 1.6		0.5	V
V_{EN_HYS}	EN Input Hysteresis			300		mV
Modulator						
T_{ON_MIN}	Minimum On Time			100		ns
T_{ON_MAX}	Maximum On Time			4.5		µs
T_{OFF_MIN}	Minimum Off Time			300		ns

Electrical Characteristics

T_A = 25°C, V_{IN}=24V, EN = 5V, unless otherwise specified. Specifications in **BOLD** indicate a temperature range of -40°C to +85°C.

Symbol	Parameter	Conditions	Min	Typ	Max	Units
Soft-Start						
I_{SS_OUT}	SS Source Current	VSS = 0, CSS = 0.001µF to 0.1µF	7	11	15	µA
PFM Control						
$V_{\overline{PFM}}$	$\overline{PFM}$ Input Threshold	PFM Mode threshold Force PWM threshold	2.5		0.5	V
$V_{\overline{PFM}\ HYS}$	$\overline{PFM}$ Input Hysteresis			300		mV
BIAS Switching-Over						
V_{SWOV}	Linear Regulator Input Switching-over Threshold of BIAS pin	Switching-over to V_{IN} Switching-over to BIAS	4.8		4.5	V
V_{SWOV_HYS}	Linear Regulator Input Switching-over Hysteresis			300		mV
Under Voltage and Over Voltage Protection						
V_{PL}	Under Voltage threshold	FB falling		70		%
T_{PL}	Under Voltage Delay Time			32		µs
V_{PH}	Over Voltage Threshold	FB rising		120		%
Power Good Signal						
V_{PG_LOW}	PGOOD Low Voltage	I_{OL} = 1mA			0.5	V
	PGOOD Leakage Current				±1	µs
V_{PGH}	PGOOD Threshold (Low level to High level)	FB rising		90		%
V_{PGL}	PGOOD Threshold (High level to Low level)	FB rising FB falling		120 85		
	PGOOD Threshold Hysteresis			5		
Power Stage Output						
$R_{DS(ON)}$	High-Side NFET On- Resistance	V_{IN} = 12V		20		mΩ
	High-Side NFET Leakage	V_{EN} = 0V, V_{LX} = 0			10	µA
$R_{DS(ON)}$	Low-Side NFET On- Resistance	V_{LX} = 12V		10		mΩ
	Low-Side NFET Leakage	V_{EN} = 0V			10	µA
Over-Current and Thermal Protection						
I_{LIM}	Current Limit		12			A
	Thermal Shutdown Threshold	T_J rising T_J falling		150 100		°C
LDO Output						
V_{CC}	LDO Output Voltage	V_{IN} > 4.8V, V_{EN} = 0V	5.10	5.30	5.50	V
I_{CC_LIM}	LDO Current Limit	V_{IN} > 24V, V_{OUT} = 5V, BIAS = NC			120	mA
$I_{CC_LIM_SWOV}$	LDO Current Limit (switching-over)	V_{IN} > 24V, V_{OUT} = BIAS = 5V			25	mA
Output Discharge						
RDIS	Discharge Resistance	V_{EN}= 0V, V_{LX} = 0.1V		35		Ω

Functional Block Diagram

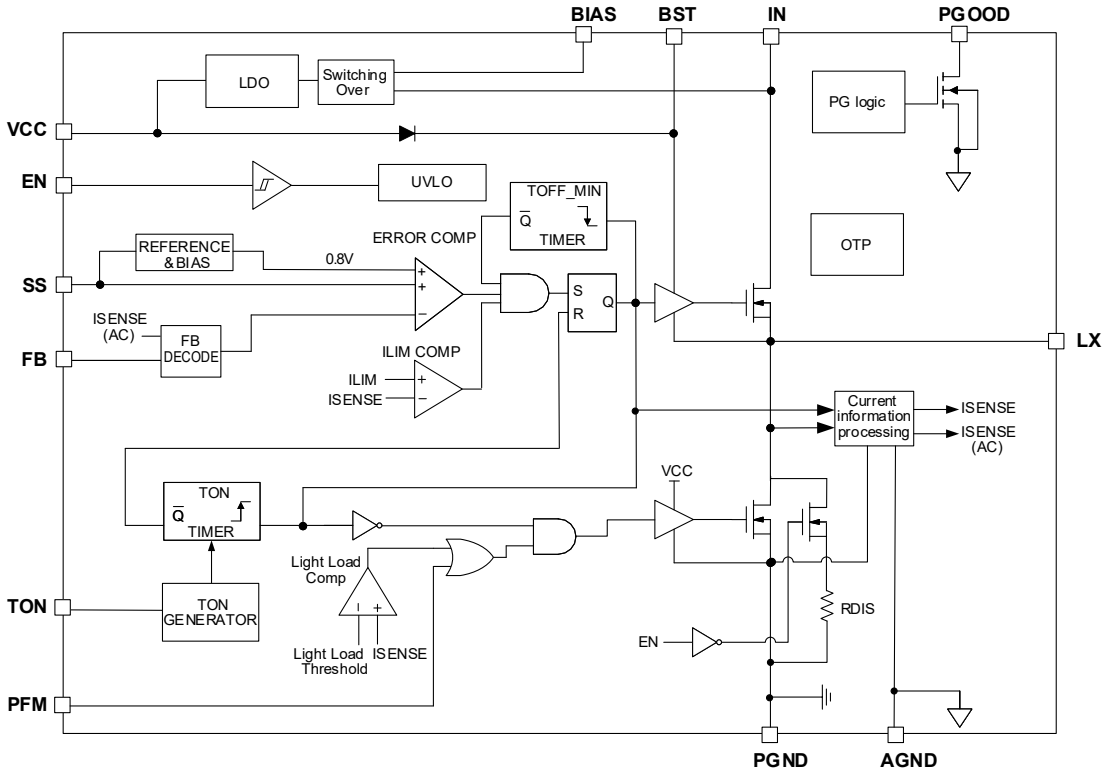

Recommended Start-up Sequence

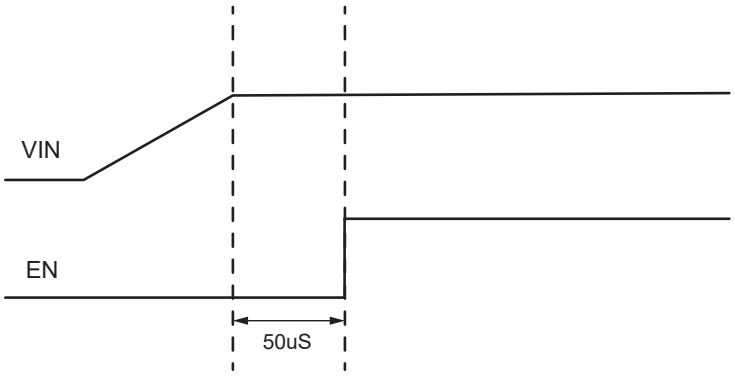

Typical Characteristics

T_A = 25 °C, V_{IN} = 24V, V_{OUT} = 5V, fs = 400kHz, L=2.2µH, C_{OUT}=88µF unless otherwise specified.

Normal Operation

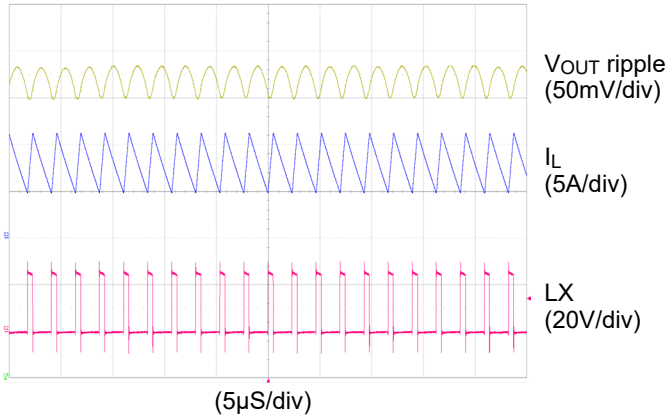

Load Transient 0A to 8A

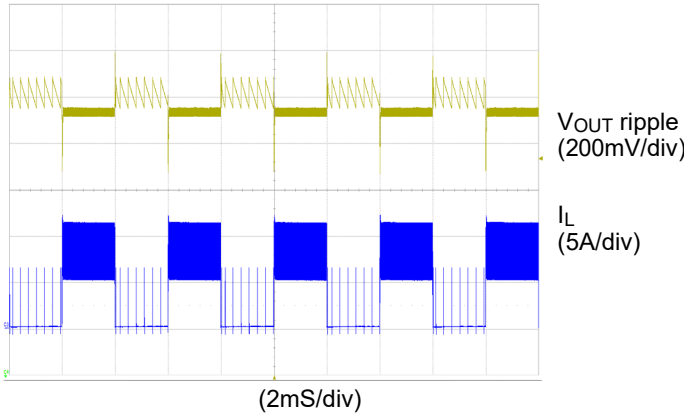

Full Load Start-up

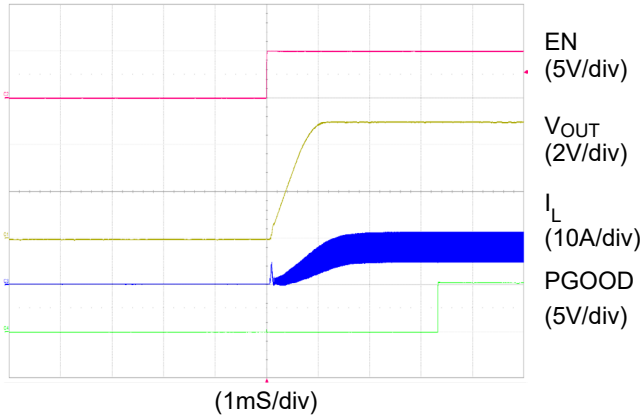

Short Circuit Protection

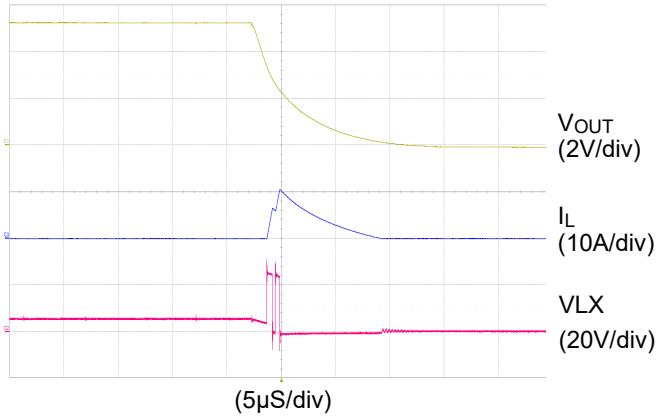

Efficiency (PFM Mode)

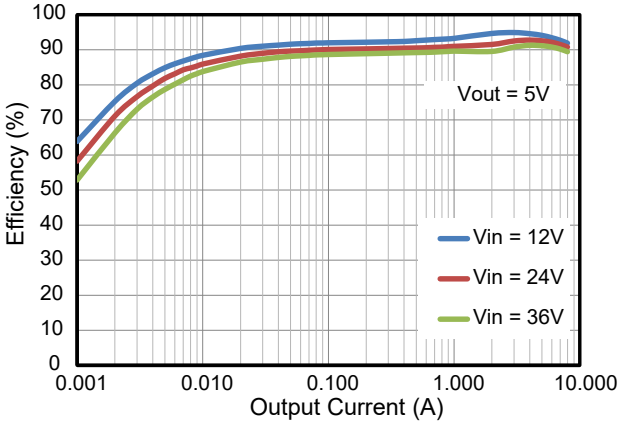

Efficiency (Force PWM Mode)

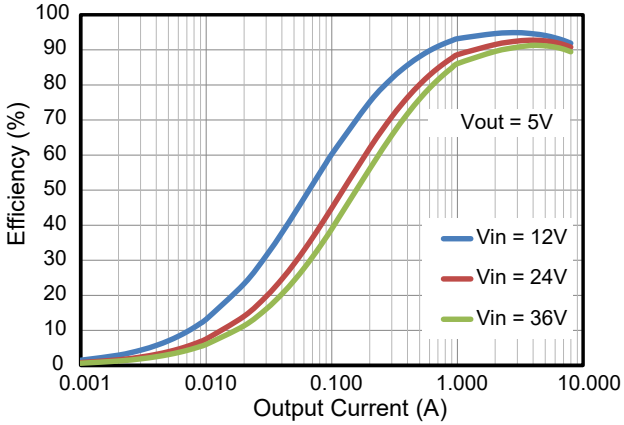

Detailed Description

The AOZ2223QI is a high-efficiency, easy-to-use, synchronous buck regulator. The regulator is capable of supplying 8A of continuous output current with an output voltage adjustable from 0.8V to 16V.

The input voltage of AOZ2223QI can be as low as 4.8V. The highest input voltage of AOZ2223QI can be 36V. Constant on-time PWM with input feed-forward control scheme results in ultra-fast transient response while maintaining relatively constant switching frequency over the entire input range. True AC current mode control scheme guarantees the regulator can be stable with ceramics output capacitor. Protection features include V_{CC} under-voltage lockout, cycle-by-cycle current limit, output over voltage and under voltage protection, short-circuit protection, and thermal shutdown.

The AOZ2223QI is available in 23-pin 4mm×4mm QFN package.

Input Power Architecture

The AOZ2223QI integrates an internal linear regulator to generate 5.3V (±5%) VCC from input power or external bias power. If bias voltage is higher than 4.8V, the input voltage of linear regulator switches to the bias for power saving. When the input voltage of linear regulator is lower than 5.3V, the linear regulator operates at low drop-output mode; the VCC voltage is equal to input voltage minus the drop-output voltage of internal linear regulator.

Enable and Soft Start

The AOZ2223QI has external soft start feature to limit in-rush current and ensure the output voltage ramps up smoothly to regulate voltage. A soft start process begins when V_{CC} rises to 4.5V and voltage on EN pin is HIGH. An internal current source charges the external soft-start capacitor; the FB voltage follows the voltage of soft-start pin (V_{SS}) when it is lower than 0.8V. When V_{SS} is higher than 0.8V, the FB voltage is regulated by internal precise band-gap voltage (0.8V). The soft-start time for FB voltage can be calculated by the following formula:

$T_{SS}(us)=330*C_{SS}(nF)$

If C_{SS} is 10nF, the soft-start time will be 3300u seconds.

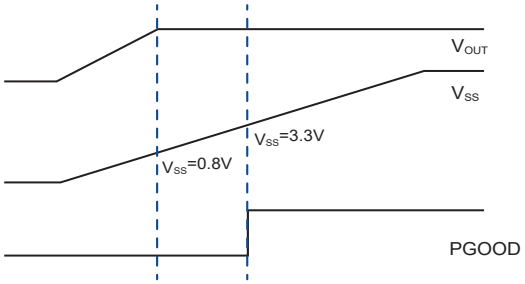

Figure 1. Soft-Start Sequence of AOZ2223QI

Constant-On-Time PWM Control with Input Feed-Foward

The control algorithm of AOZ2223QI is constant-on-time PWM control with input feed-forward.

The simplified control schematic is shown in Figure.2. The high-side switch on-time is determined solely by an one-shot whose pulse width is inversely proportional to input voltage (IN). The one-shot is triggered when the internal 0.8V is higher than the combined information of FB voltage and the AC current information of inductor, which is processed and obtained through the sensed low-side MOSFET current once it turns-on. The added AC current information can help the stability of constant-on time control even with pure ceramic output capacitors, which have very low ESR. The AC current information has no DC offset, which does not cause offset with output load change, which is fundamentally different from other V2 constant-on time control schemes.

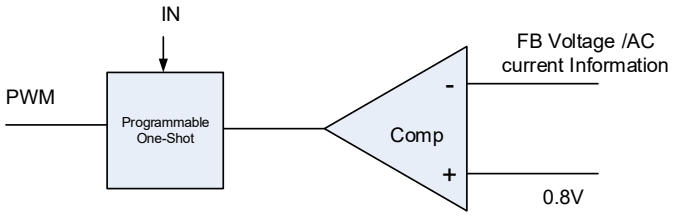

Figure 2. Simplified Control Schematic of AOZ2223QI

The constant-on-time PWM control architecture is a pseudo-fixed frequency with input voltage feed-forward. The internal circuit of AOZ2223QI sets the on-time of high-side switch inversely proportional to the IN.

$$T_{ON} \propto \frac{R_{TON}(k\Omega)}{V_{IN}(V)} \quad (1)$$

To achieve the flux balance of inductor, the buck converter has the equation:

$$F_{SW} = \frac{V_{OUT}}{V_{IN} \times T_{ON}} \quad (2)$$

Once the product of Vin*Ton is constant, the switching frequency keeps constant and is independent of input voltage.

An external resistor between the IN and TON pin sets the switching on-time according to the following equation:

$$T_{ON}(ns) = \frac{R_{TON}(k\Omega)}{V_{IN}(V)} \times 25 \quad (3)$$

Then, the switching frequency can be estimated by:

$$F_{SW}(kHz) = \frac{V_{OUT}}{V_{IN} * T_{ON}(ns)} \times 10^6 = \frac{V_{OUT}}{R_{TON}(k\Omega)} \times 4 \times 10^4 \quad (4)$$

If V_{OUT} is 3.3V, and set Fs=500kHz. According to the above equation, we can find out R_{TON} is 264kΩ. Notice that the frequency would be slightly increased due to the voltage dropping at the resistance of power trace.

This algorithm results in a nearly constant switching frequency despite the lack of a fixed-frequency clock generator.

True Current Mode Control

The constant-on-time control scheme is intrinsically unstable if output capacitor's ESR is not large enough as an effective current-sense resistor. Ceramic capacitors usually cannot be used as output capacitor.

The AOZ2223QI senses the low-side MOSFET current and processes it into DC current and AC current information using AOS proprietary technique. The AC current information is decoded and added on the FB pin on phase. With AC current information, the stability of constant-on-time control is significantly improved even without the help of output capacitor's ESR; and thus the pure ceramic capacitor solution can be applicant. The pure ceramic capacitor solution can significantly reduce the output ripple (no ESR caused overshoot and undershoot) and less board area design.

Current-Limit Protection

The AOZ2223QI has the current-limit protection by using Rdson of the low-side MOSFET to be as current sensing. To detect real current information, a minimum constant off time (300ns typical) is implemented after a constant-on time. If the current exceeds the current-limit threshold, the PWM controller is not allowed to initiate a new cycle. The actual peak current is greater than the current-limit threshold by an amount equal to the inductor ripple current. Therefore, the exact current-limit characteristic and maximum load capability are a function of the inductor value and input and output voltages. The current limit will keep the low-side MOSFET on and will not allow another high-side on-time, until the current in the low-side MOSFET reduces below the current limit.

Output Voltage Under-voltage Protection

If the output voltage is lower than 70% by over-current or short circuit, AOZ2223QI will wait for 32µs (typical) and turns-off both high-side and low-side MOSFET and shuts down. Only when triggered, the enable can restart the AOZ2223QI again.

Output Voltage Over-voltage Protection

The threshold of OVP is set 20% higher than 0.8V. When the VFB voltage exceeds the OVP threshold, high-side MOSFET is turn-off and low-side MOSFET is turn-on 1uS, then shuts down. Only when triggered, the enable can restart the AOZ2223QI again.

Application Information

The basic AOZ2223QI application circuit is shown in previous page. Component selection is explained below.

Input Capacitor

The input capacitor must be connected to the IN pins and PGND pin of the AOZ2223QI to maintain steady input voltage and filter out the pulsing input current. A small decoupling capacitor, usually 4.7uF, should be connected to the VCC pin and AGND pin for stable operation of the AOZ2223QI. The voltage rating of input capacitor must be greater than maximum input voltage plus ripple voltage.

The input ripple voltage can be approximated by equation below:

$$\Delta V_{IN} = \frac{I_{OUT}}{f \times C_{IN}} \times \left(1 - \frac{V_{OUT}}{V_{IN}}\right) \times \frac{V_{OUT}}{V_{IN}} \quad (5)$$

Since the input current is discontinuous in a buck converter, the current stress on the input capacitor is another concern when selecting the capacitor. For a buck circuit, the RMS value of input capacitor current can be calculated by:ww

$$I_{CIN_RMS} = I_{OUT} \times \sqrt{\frac{V_{OUT}}{V_{IN}}\left(1 - \frac{V_{OUT}}{V_{IN}}\right)} \quad (6)$$

if let m equal the conversion ratio:

$$\frac{V_{OUT}}{V_{IN}} = m \quad (7)$$

The relation between the input capacitor RMS current and voltage conversion ratio is calculated and shown in Figure. 3. It can be seen that when V_O is half of V_{IN}, C_{IN} is under the worst current stress. The worst current stress on C_{IN} is $0.5 \cdot I_O$.

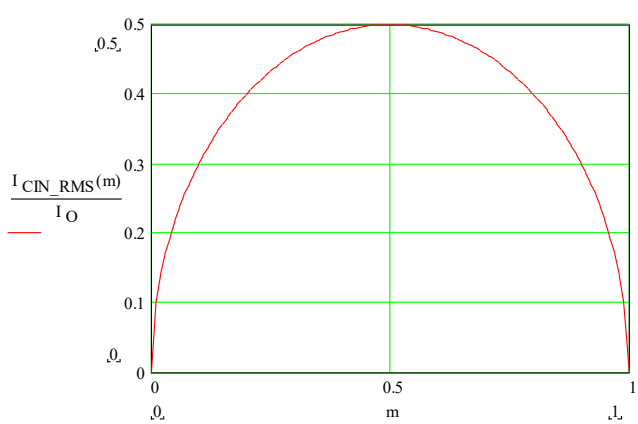

Figure 3. ICIN vs. Voltage Conversion Ratio

For reliable operation and best performance, the input capacitors must have current rating higher than ICIN-RMS at worst operating conditions. Ceramic capacitors are preferred for input capacitors because of their low ESR and high ripple current rating. Depending on the application circuits, other low ESR tantalum capacitor or aluminum electrolytic capacitor may also be used. When selecting ceramic capacitors, X5R or X7R type dielectric ceramic capacitors are preferred for their better temperature and voltage characteristics. Note that the ripple current rating from capacitor manufactures is based on certain amount of life time. Further de-rating may be necessary for practical design requirement.

Inductor

The inductor is used to supply constant current to output when it is driven by a switching voltage. For given input and output voltage, inductance and switching frequency together decide the inductor ripple current, which is,

$$\Delta I_L = \frac{V_{OUT}}{f \times L} \times \left(1 - \frac{V_{OUT}}{V_{IN}}\right) \quad (8)$$

The peak inductor current is:

$$I_{Lpeak} = I_{OUT} + \frac{\Delta I_L}{2} \quad (9)$$

High inductance gives low inductor ripple current but requires larger size inductor to avoid saturation. Low ripple current reduces inductor core losses. It also reduces RMS current through inductor and switches, which results in less conduction loss. Usually, peak to peak ripple current on inductor is designed to be 30% to 50% of output current.

When selecting the inductor, make sure it is able to handle the peak current without saturation even at the highest operating temperature.

The inductor takes the highest current in a buck circuit. The conduction loss on inductor needs to be checked for thermal and efficiency requirements.

Surface mount inductors in different shape and styles are available from Coilcraft, Elytone and Murata. Shielded inductors are small and radiate less EMI noise. But they cost more than unshielded inductors. The choice depends on EMI requirement, price and size.

Output Capacitor

The output capacitor is selected based on the DC output voltage rating, output ripple voltage specification and ripple current rating.

The selected output capacitor must have a higher rated voltage specification than the maximum desired output voltage including ripple. De-rating needs to be considered for long term reliability.

Output ripple voltage specification is another important factor for selecting the output capacitor. In a buck converter circuit, output ripple voltage is determined by inductor value, switching frequency, output capacitor value and ESR. It can be calculated by the equation below:

$$\Delta V_{OUT} = \Delta I_L \times \left(ESR_{C_o} + \frac{1}{8 \times f \times C_o} \right) \quad (10)$$

where CO is output capacitor value and ESRCO is the Equivalent Series Resistor of output capacitor.

$$\Delta V_{OUT} = \Delta I_L \times \frac{1}{8 \times f \times C_o} \quad (11)$$

When low ESR ceramic capacitor is used as output capacitor, the impedance of the capacitor at the switching frequency dominates. Output ripple is mainly caused by capacitor value and inductor ripple current. The output ripple voltage calculation can be simplified to:

$$\Delta V_{OUT} = \Delta I_L \times ESR_{C_o} \quad (12)$$

If the impedance of ESR at switching frequency dominates, the output ripple voltage is mainly decided by capacitor ESR and inductor ripple current. The output ripple voltage calculation can be further simplified to:

For lower output ripple voltage across the entire operating temperature range, X5R or X7R dielectric type of ceramic, or other low ESR tantalum are recommended to be used as output capacitors.

In a buck converter, output capacitor current is continuous. The RMS current of output capacitor is decided by the peak to peak inductor ripple current. It can be calculated by:

$$I_{CO_RMS} = \frac{\Delta I_L}{\sqrt{12}} \quad (13)$$

Usually, the ripple current rating of the output capacitor is a smaller issue because of the low current stress. When the buck inductor is selected to be very small and inductor ripple current is high, output capacitor could be overstressed.

Thermal Management and Layout Consideration

In the AOZ2223QI buck regulator circuit, high pulsing current flows through two circuit loops. The first loop starts from the input capacitors, to the VIN pin, to the LX pins, to the filter inductor, to the output capacitor and load, and then return to the input capacitor through ground. Current flows in the first loop when the high side switch is on. The second loop starts from inductor, to the output capacitors and load, to the low side switch. Current flows in the second loop when the low side low side switch is on.

In PCB layout, minimizing the two loops area reduces the noise of this circuit and improves efficiency. A ground plane is strongly recommended to connect input capacitor, output capacitor, and PGND pin of the AOZ2223QI.

In the AOZ2223QI buck regulator circuit, the major power dissipating components are the AOZ2223QI and the output inductor. The total power dissipation of converter circuit can be measured by input power minus output power.

$$P_{total_loss} = V_{IN} \times I_{IN} - V_{OUT} \times I_{OUT} \quad (14)$$

The power dissipation of inductor can be approximately calculated by DCR of inductor and output current.

$$P_{inductor_loss} = I_{OUT}^2 \times R_{inductor} \times 1.1 \quad (15)$$

The actual junction temperature can be calculated with power dissipation in the AOZ2223QI and thermal impedance from junction to ambient.

$$T_{junction} = (P_{total_loss} - P_{total_loss}) \times \theta_{JA} + T_A \quad (16)$$

The maximum junction temperature of AOZ2223QI is 150ºC, which limits the maximum load current capability.

The thermal performance of the AOZ2223QI is strongly affected by the PCB layout. Extra care should be taken by users during design process to ensure that the IC will operate under the recommended environmental conditions.

Layout Considerations

1. Several layout tips are listed below for the best electric and thermal performance.
2. Connected a small copper plane to LX pin to have lower noise interference area.
3. The IN pins and pad are connected to internal high side switch drain. They are also low resistance thermal conduction path. Connected a large copper plane to IN pins to help thermal dissipation.
4. Input capacitors should be connected to the IN pin and the PGND pin as close as possible to reduce the switching spikes.
5. Decoupling capacitor CVCC should be connected to VCC and AGND as close as possible.
6. Voltage divider R1 and R2 should be placed as close as possible to FB and AGND.
7. A large ground plane is preferred.
8. Keep sensitive signal traces such as feedback trace far away from the LX pins.
9. Pour copper plane on all unused board area and connect it to stable DC nodes, like VIN, GND or VOUT.
10. Place via to connect AGND pin and ground layer, the via must be placed as close as possible to AGND pin. Place via as close as possible to PGND pins and the ground side of output capacitor, too.

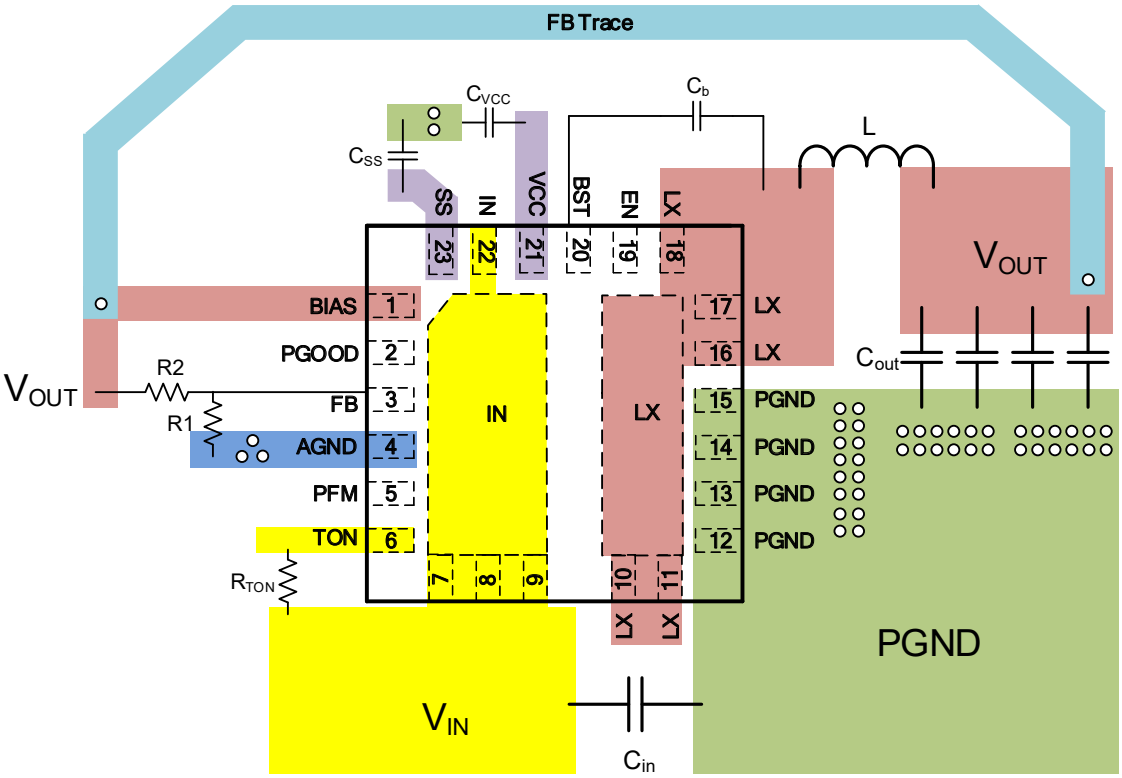

Package Dimensions, QFN4x4-23L

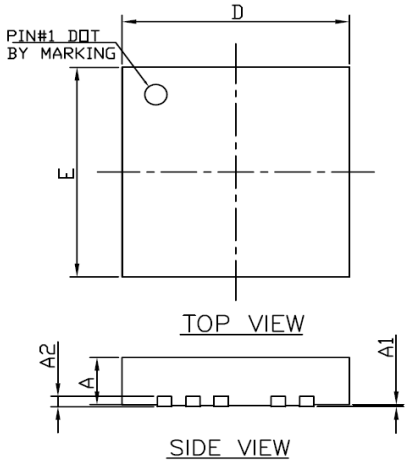

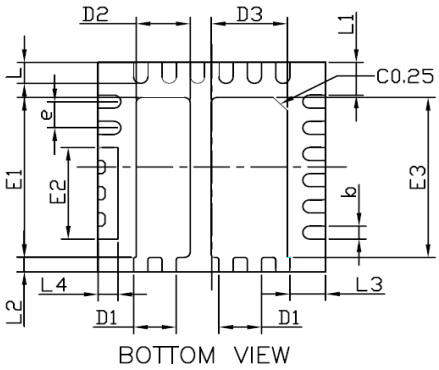

RECOMMENDED LAND PATTERN

Option 1

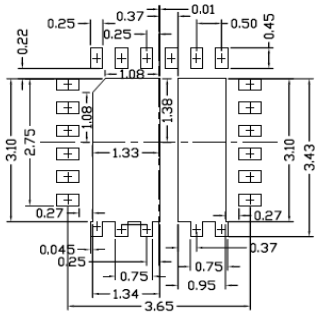

Option 2

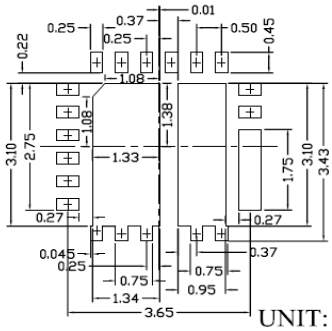

UNIT: mm

SYMBOLS	DIMENSIONS IN MILLIMETERS			DIMENSIONS IN INCHES		
	MIN	NOM	MAX	MIN	NOM	MAX
A	0.80	0.90	1.00	0.031	0.035	0.039
A1	0.00	—	0.05	0.000	—	0.002
A2	0.2 REF			0.008 REF		
E	3.90	4.00	4.10	0.153	0.157	0.161
E1	2.95	3.05	3.15	0.116	0.120	0.124
E2	1.65	1.75	1.85	0.065	0.069	0.073
E3	2.95	3.05	3.15	0.116	0.120	0.124
D	3.90	4.00	4.10	0.153	0.157	0.161
D1	0.65	0.75	0.85	0.026	0.030	0.034
D2	0.85	0.95	1.05	0.033	0.037	0.041
D3	1.24	1.34	1.44	0.049	0.053	0.057
L	0.35	0.40	0.45	0.014	0.016	0.018
L1	0.57	0.62	0.67	0.022	0.024	0.026
L2	0.23	0.28	0.33	0.009	0.011	0.013
L3	0.57	0.62	0.67	0.022	0.024	0.026
L4	0.30	0.35	0.40	0.012	0.014	0.016
b	0.20	0.25	0.30	0.008	0.010	0.012
e	0.50 BSC			0.020 BSC		

NOTE
1. CONTROLLING DIMENSION IS MILLIMETER.
   CONVERTED INCH DIMENSIONS ARE NOT NECESSARILY EXACT.
2. TOLERANCE :±0.05 UNLESS OTHERWISE SPECIFIED.
3. RADIUS ON ALL CORNER ARE 0.152 MAX., UNLESS OTHERWISE SPECIFIED.
4. PACKAGE WARPAGE: 0.012 MAX.
5. NO ANY PLASTIC FLASH ALLOWED ON THE TOP AND BOTTOM LEAD SURFACE.
6. PAD PLANARITY: ±0.102
7. CRACK BETWEEN PLASTIC BODY AND LEAD IS NOT ALLOWED.

Tape and Reel Dimensions, QFN4x4-23L

QFN4x4 Carrier Tape

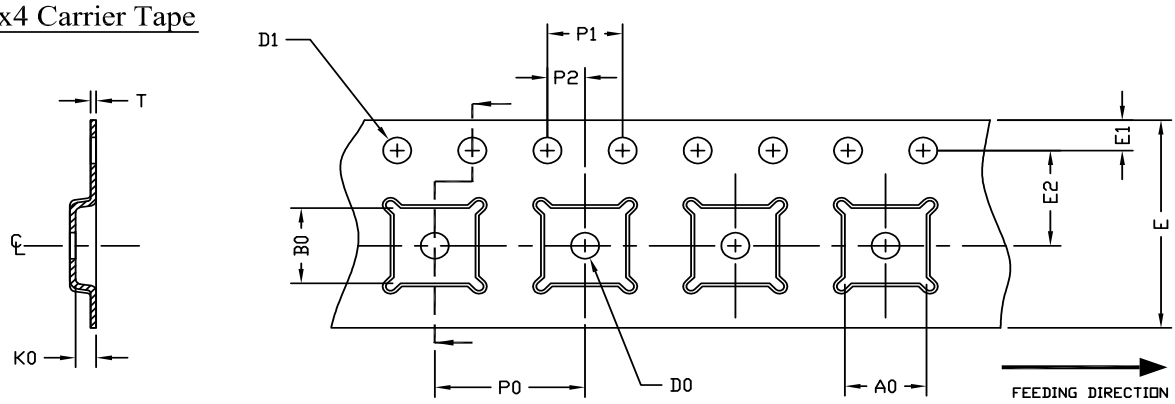

UNIT: MM

PACKAGE	A0	B0	K0	D0	D1	E	E1	E2	P0	P1	P2	T
QFN4x4 (12 mm)	4.35 ±0.10	4.35 ±0.10	1.10 ±0.10	1.50 MIN.	1.50 +0.1 −0.0	12.0 ±0.3	1.75 ±0.10	5.50 ±0.05	8.00 ±0.10	4.00 ±0.10	2.00 ±0.05	0.30 ±0.05

QFN4x4 Reel

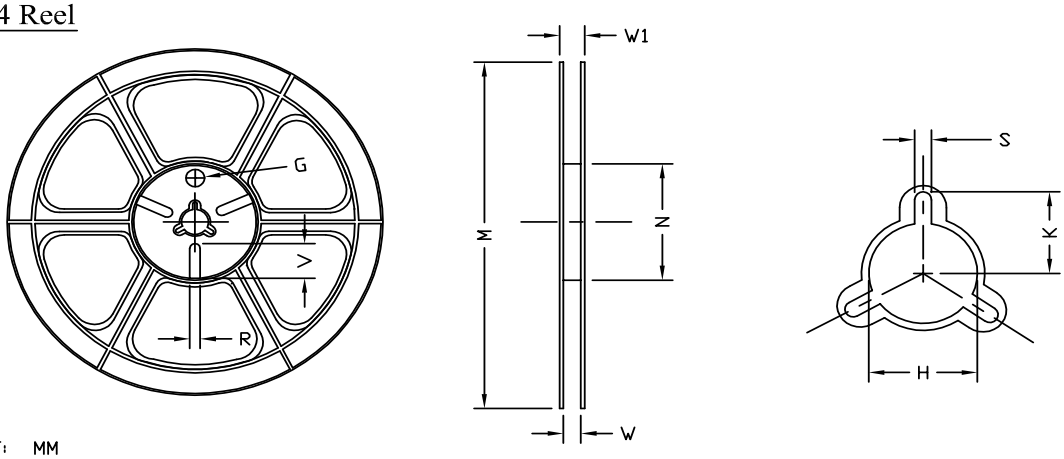

UNIT: MM

TAPE SIZE	REEL SIZE	M	N	W	W1	H	K	S	G	R	V
12 mm	ø330	ø330.0 ±2.0	ø79.0 ±1.0	12.4 +2.0 −0.0	17.0 +2.6 −1.2	ø13.0 ±0.5	10.5 ±0.2	2.0 ±0.5	---	---	---

QFN4x4 Tape

Leader / Trailer & Orientation

Normal

Unit Per Reel: 3000pcs

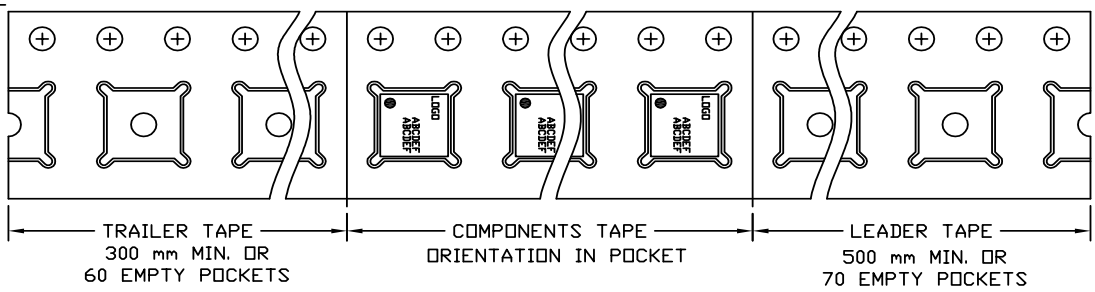

Part Marking

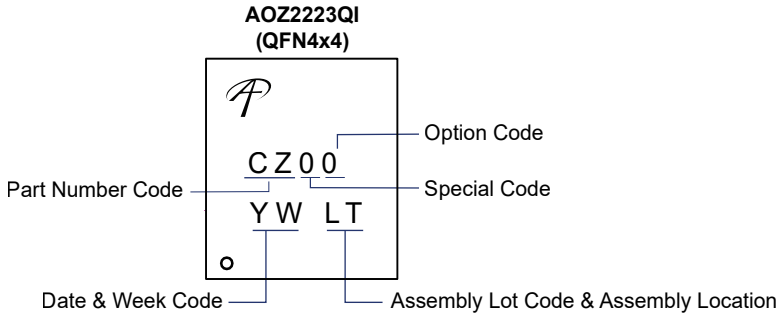

LEGAL DISCLAIMER

Applications or uses as critical components in life support devices or systems are not authorized. Alpha and Omega Semiconductor does not assume any liability arising out of such applications or uses of its products. AOS reserves the right to make changes to product specifications without notice. It is the responsibility of the customer to evaluate suitability of the product for their intended application. Customer shall comply with applicable legal requirements, including all applicable export control rules, regulations and limitations.

AOS's products are provided subject to AOS's terms and conditions of sale which are set forth at:
http://www.aosmd.com/terms_and_conditions_of_sale

LIFE SUPPORT POLICY

ALPHA AND OMEGA SEMICONDUCTOR PRODUCTS ARE NOT AUTHORIZED FOR USE AS CRITICAL COMPONENTS IN LIFE SUPPORT DEVICES OR SYSTEMS.

As used herein:

1. Life support devices or systems are devices or systems which, (a) are intended for surgical implant into the body or (b) support or sustain life, and (c) whose failure to perform when properly used in accordance with instructions for use provided in the labeling, can be reasonably expected to result in a significant injury of the user.

2. A critical component in any component of a life support, device, or system whose failure to perform can be reasonably expected to cause the failure of the life support device or system, or to affect its safety or effectiveness.