AN3370K

Flying-Erase IC

■ Overview

The AN3370K can amplify high-frequency current generated by the built-in oscillator and drive the Flying-erase head. This IC also allows to set an oscillation frequency and an output current optionally with external constants according to the erase head.

■ Features

- Built-in high-accuracy, stable oscillator.
- Capable of varying output current value and an oscillation frequency with external constants.

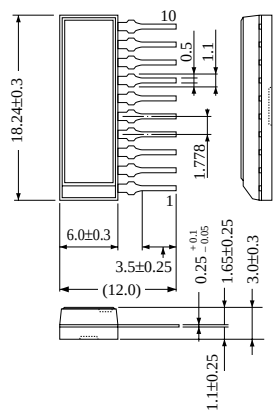

10-Pin Shrunk SIL Plastic Package (10-SSIP)

■ Block Diagram

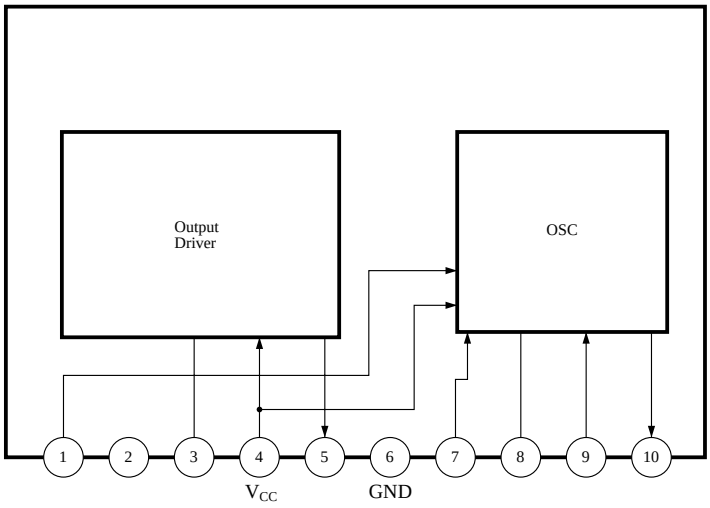

■ Absolute Maximum Ratings (Ta=25˚C)

Parameter	Symbol	Rating	Unit
Supply voltage	V_{CC}	12.6	V
Power dissipation	P_D	500	mW
Operating ambient temperature	T_{opr}	– 20 to + 70	˚C
Storage temperature	T_{stg}	– 55 to +150	˚C

■ Recommended Operating Range (Ta = 25˚C)

Parameter	Symbol	Range
Operating supply voltage range	V_{CC}	10.5V to 12.5V

■ Electrical Characteristics (V_{CC}=12V, Ta=25˚C)

Parameter	Symbol	Condition	min	typ	max	Unit
Supply current	I_{CC}	V_1= 5V	20	28	36	mA
Oscillation output amplitude	V_{O1}	V_1= 5V, R_L= 300Ω	8	9	—	V_{PP}
Oscillation frequency	f_O	V_1= 5V, R_L= 300Ω	11	11.55	12.1	MHz
Oscillation output amplitude	V_{O2}	V_1= 0V, R_L= 300Ω	—	—	10	mV_{PP}
Flying ON	V_{1H}		3.5	—	—	V
Flying OFF	V_{1L}		—	—	0.8	V

■ Application Circuit

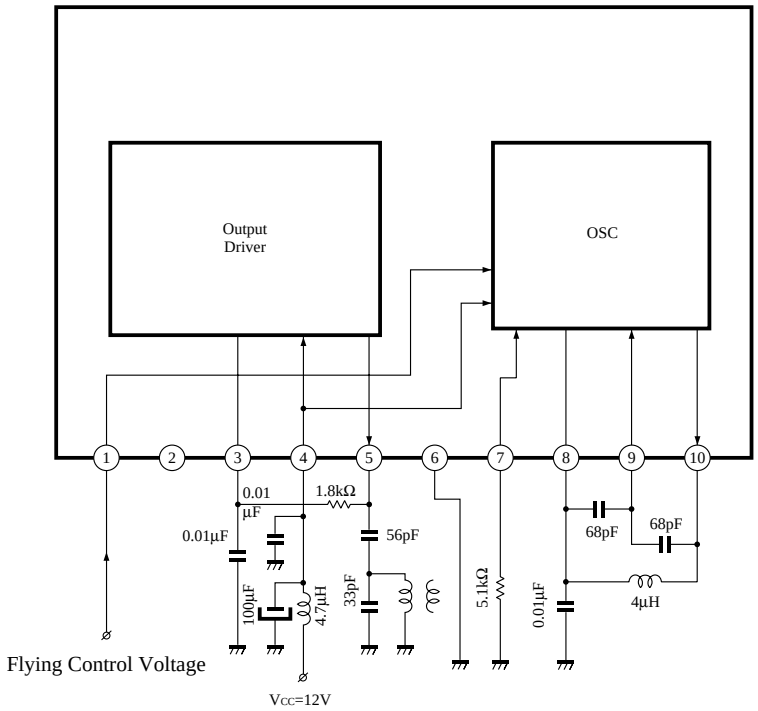

Note) Do not apply a voltage (0V included) to the Pin2 from the external.

■ Pin Descriptions

Pin No.	Pin name	Typ. waveform	Description	I/O impedance	Equivalent circuit
1	Flying erase control pin	———	Flying erase ON/OFF control pin. ON when 3.5V or more is applied, and OFF when 0.8V or less is applied.	3MΩ	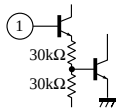
2	———	———	Do not apply a voltage from the external.	60kΩ	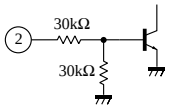
3	Feedback pin	———	Feedback pin to obtain a DC voltage by filtering an output signal via an external capacitor	—	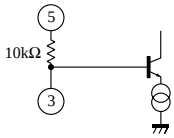
4	Power supply	———	Power supply pin. Apply 12V typically from the external.	—	———
5	Output pin	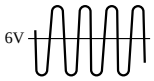	High-frequency current	10kΩ	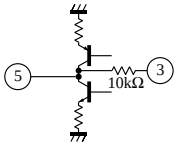
6	GND	———	———	—	———
7	Oscillation input pin	———	It is possible to change the current which can be taken out of an output, by varying the resistor between this pin and GND.	NPN T_r emitter	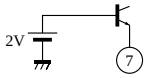
8	Reference voltage pin	———	Generates a reference voltage of 1/2 V_{CC} (approx. 6V)	NPN T_r emitter	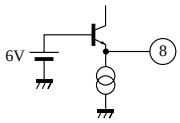
9	Oscillation feedback pin	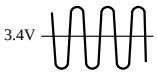	A signal from Pin10 oscillation output is divided by the capacitor and is fed back.	3kΩ	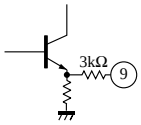
10	Oscillation output pin	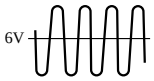	Oscillates at the frequency determined by L, C of the Pins8, 9, 10	6.2kΩ	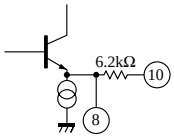

■ Supplementary Explanation

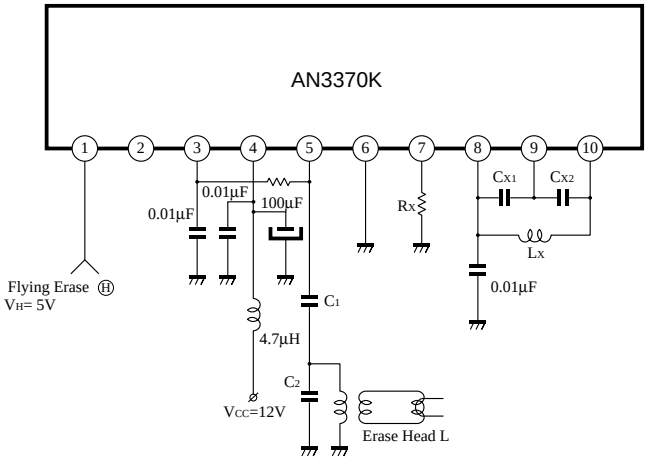

1) Internal Oscillation Frequency

An internal oscillation frequency is determined by the following expression. Set C_{X1}, C_{X2}, and L_X according to a frequency.

$$f_{OSC} = \frac{1}{2\pi\sqrt{L_x \cdot \frac{C_{X1} \cdot C_{X2}}{C_{X1} + C_{X2}}}} \quad \cdots\cdots\cdots\cdots\cdots\cdots (1)$$

In order to obtain stable oscillation, set C_{X1}/C_{X2} near 1 and absolute value of C_{X1}, C_{X2} to such a considerable extent that an internal IC capacitance (approx. 5pF) and an external PCB capacitance can be ignored.

2) R_X

Output current amplitude from the IC is determined by the external resistor R_X of the Pin7 ; it is approximately as shown in Fig. 1. Therefore, use within the following range.

I_5=20mA$_{pp}$ to 65mA$_{pp}$.

3) Do not apply the Pin1 voltage when V_{CC} is off.

Use the Pin2 voltage open.

4) Output Dynamic Range

Since the output pin (5) dynamic range of the AN3370K is 8V$_{PP}$ (at V_{CC}=12V), set a combination of C_1, C_2, and erase head inductance (L) so that the following will be ensured.

I_5 (mA$_{pp}$) × load impedance < 8V$_{PP}$.

5) Serial and Parallel Resonance Points

- Serial resonance frequency $f_1 = \frac{1}{2\pi\sqrt{L(C_1 + C_2)}}$ ····· (2)

  Since Pin5 amplitude is minimized at a point of f_1, set f_1 so that it will almost coincide with f_{OSC}.

- Parallel resonance frequency

  Suppose the internal capacitance of the Pin5 is C_5, then parallel resonance frequency is

$$f_2 = \frac{L}{2\pi\sqrt{L\left(C_2 + \frac{C_5 \cdot C_1}{C_5 + C_1}\right)}} \quad \cdots (3)$$

Although an erase head current is maximized at this point, set $f_2/f_{OSC} \fallingdotseq 1.25$ to 1.4

• Characteristic Curve

Fig. 1. I_5–R_X