ORIENT DISPLAY

Your Total LCD Solution Provider

http://www.orientdisplay.com

SPECIFICATION
FOR
LCM MODULE

MODULE NO.: AFV240240A1M-1.5IWTM
DOC. REVISION01

Customer Approval:

	SIGNATURE	DATE
PREPARED BY (RD ENGINEER)		
PREPARED BY (QA ENGINEER)		
CHECKED BY		
APPROVED BY		

WRITTEN BY	CHECKED BY	APPROVED BY

Notes:

1、Please contact Orient Display before assigning your product based on this module specification.

2、To improve the quality of product, and this product specification is subject to change without any notice.

Orient Display (N.A.) Ltd.
145 Royal Crest Court, Unit 42, Markham, ON, Canada L3R 9Z4
Tel: 905-477-1166 Fax: 905-477-1782

Orient Display (USA) Corp.
14925 SE Allen Road, Suite 203 B, Bellevue, WA 98006
Tel: (425)698-1938 Fax: (425)698-1852

REVISION RECORD

REV NO.	REV DATE	CONTENTS	REMARKS
V0.1	2014-12-24	First release	Preliminary

CONTENTS

■ GENERAL INFORMATION 4

■ ABSOLUTE MAXIMUM RATINGS 4

■ ELECTRICAL CHARACTERISTICS 4

■ BACKLIGHT CHARACTERISTICS 4

■ EXTERNAL DIMENSIONS 5

■ ELECTRO-OPTICAL CHARACTERISTICS 6

■ INTERFACE DESCRIPTION 8

■ AC CHARACTERISTICS 9

■ POWER SEQUENCE 10

■ REFERENCE APPLICATION CIRCUIT 11

■ RELIABILITY TEST CONDITIONS 12

■ INSPECTION CRITERION 13

■ PACKING SPECIFICATION 18

■ GENERAL INFORMATION

Item of general information	Contents	Unit
LCD size	1.54 inch	/
LCD type	TFT/TRANSMISSIVE normal Black	
Recommended View direction	ALL o'clock	
Resolution	240*3(RGB)*240	
Module size (W × H×T)	31.82(W)×33.72(H)×1.147(D)	mm^3
Active area (W×H)	27.744(H)×27.744(V)	mm^2
Pixel pitch (W × H)	0.0867(H)×0.0867(V)	mm^2
Interface Type	MIPI Interface	/
Input voltage	2.8V	V
Module Power consumption	TBD	mw
Backlight Type	2*LED	/

■ ABSOLUTE MAXIMUM RATINGS

Parameter	Symbol	Min	Max	Unit
Power supply voltage	VDD	-0.3	3.3	V
	VDDIO	-0.3	3.3	V
Operating temperature	Top	-20	70	°C
Storage temperature	TST	-30	80	°C
Humidity	RH	-	90%(Max60 °C)	RH

■ ELECTRICAL CHARACTERISTICS
DC CHARACTERISTICS

Parameter	Symbol	Min	Typ	Max	Unit
Supply Voltage	VDD	2.5	2.8	3.3	V
I/O power supply	VDDIO	1.65	1.8	3.3	V
Current of power supply	Idd	-	TBD	-	mA
Input voltage 'H' level	V_{IH}	0.7VDD	-	VDD	V
Input voltage 'L' level	V_{IL}	0	-	0.3VDD	V

■ BACKLIGHT CHARACTERISTICS

Item of backlight characteristics	Symbol	Min.	Typ.	Max.	Unit	Condition
Forward voltage	Vf	6.0	6.4	6.8	V	Note 1
Current for LED backlight	IL	-	20	-	mA	Note 1
LED life time		-	-	-	Hour	Note 2

Note 1: The LED Supply Voltage is defined by the number of LED at Ta=25℃ and IL =20mA for each LED.
Note 2: The "LED life time" is defined as the module brightness decrease to 50% original brightness at Ta=25℃ and IL =20mA. The LED lifetime could be decreased if operating IL is larger than 20 mA.

■ EXTERNAL DIMENSIONS

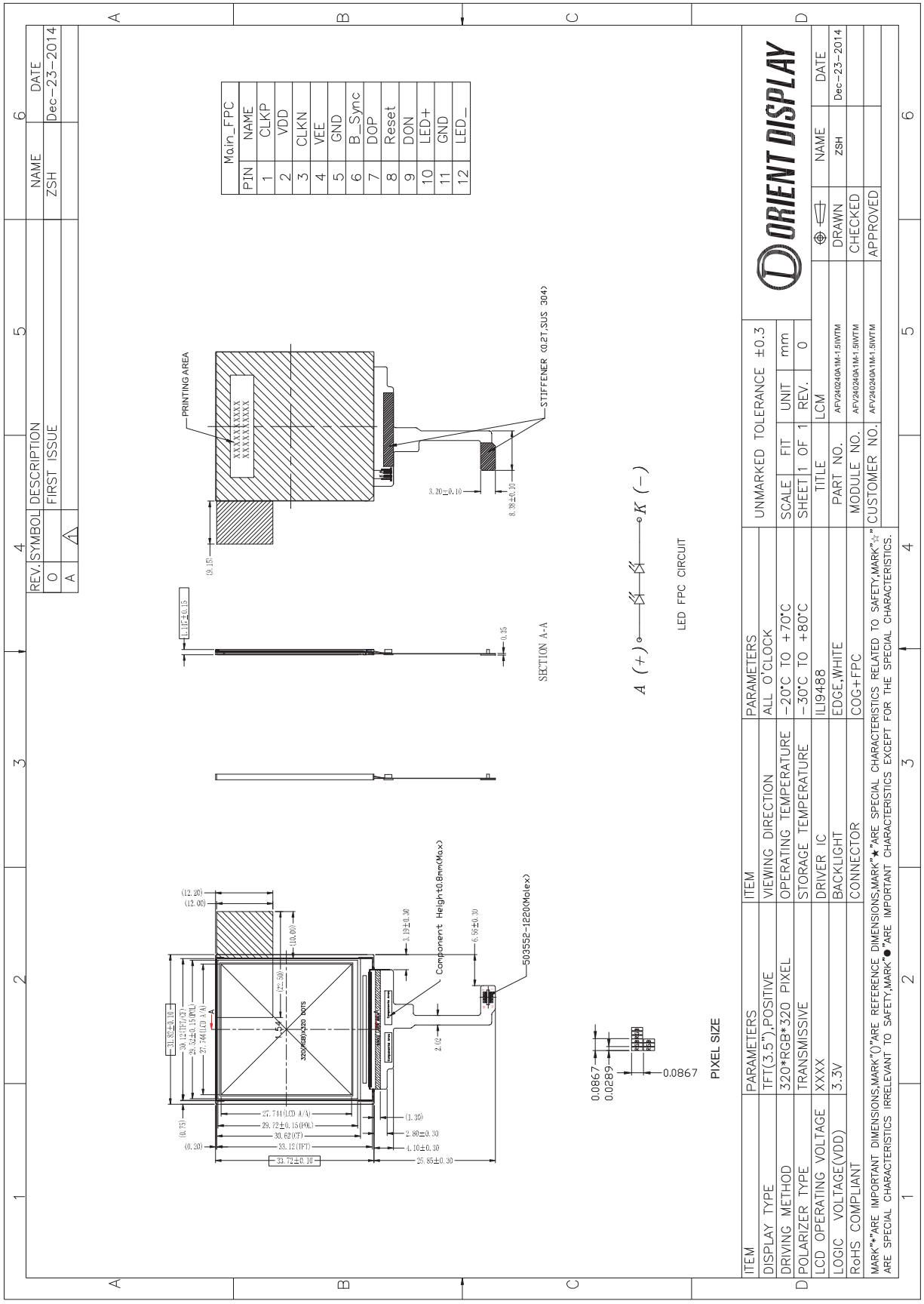

■ ELECTRO-OPTICAL CHARACTERISTICS

Item of electro-optical characteristics	Symbol	Condition	Min	Typ	Max	Unit	Remark	Note
Response time	Tr+ Tf		–	35	-	ms	Fig.1	4
Contrast ratio	Cr		-	900	–	---	FIG 2.	1
Luminance uniformity	δ WHITE		80	-	–	%	FIG 2.	3
Surface Luminance	Lv			400	–	cd/m^2	FIG 2.	2
Viewing angle range	θ	∅ = 90°	–	80	–	deg	FIG 3.	6
		∅ = 270°	–	80	–	deg	FIG 3.	
		∅ = 0°	–	80	–	deg	FIG 3.	
		∅ = 180°	–	80	–	deg	FIG 3.	
CIE (x, y) chromaticity	Red x	θ=0° ∅=0° Ta=25℃	-	TBD	-	-	FIG 2.	5
	Red y		-	TBD	-	-		
	Green x		-	TBD	-	-		
	Green y		-	TBD	-	-		
	Blue x		-	TBD	-	-		
	Blue y		-	TBD	-	-		
	White x		-	TBD	-	-		
	White y		-	TBD	-	-		

Note1. Contrast Ratio(CR) is defined mathematically by the following formula. For more information see FIG 2.:

$$\text{Contrast Ratio} = \frac{\text{Average Surface Luminance with all white pixels (P1, P2, P3, P4, P5)}}{\text{Average Surface Luminance with all black pixels (P1, P2, P3, P4, P5)}}$$

Note2. Surface luminance is the LCD surface from the surface with all pixels displaying white. For more information see FIG 2.

Lv = Average Surface Luminance with all white pixels (P1, P2, P 3,P4, P5)

Note3. The uniformity in surface luminance（δ WHITE） is determined by measuring luminance at each test position 1 through 5, and then dividing the maximum luminance of 5 points luminance by minimum luminance of 5 points luminance. For more information see FIG 2.

$$\delta\ \text{WHITE} = \frac{\text{Minimum Surface Luminance with all white pixels (P1, P2, P3, P4, P5)}}{\text{Maximum Surface Luminance with all white pixels (P1, P2, P3, P4, P5)}}$$

Note4. Response time is the time required for the display to transition from White to black(Rise Time, Tr) and from black to white(Decay Time, Tf). For additional information see FIG 1..

Note5. CIE (x, y) chromaticity ,The x,y value is determined by screen active area position NO.5 For more information see FIG 2.

Note6. Viewing angle is the angle at which the contrast ratio is greater than 2. For TFT module the conrast ratio is greater than 10. The angles are determined for the horizontal or x axis and the vertical or y axis with respect to the z axis which is normal to the LCD surface. For more information see FIG 3.

Note7. For Viewing angle and response time testing, the testing data is base on Autronic-Melchers's ConoScope. Series Instruments. For contrast ratio, Surface Luminance, Luminance uniformity and CIE， the testing data is base on TOPCON's BM-5 photo detector or compatible.

Note8. For TFT module, Gray scale reverse occurs in the direction of panel viewing angle

FIG.1. The definition of Response Time

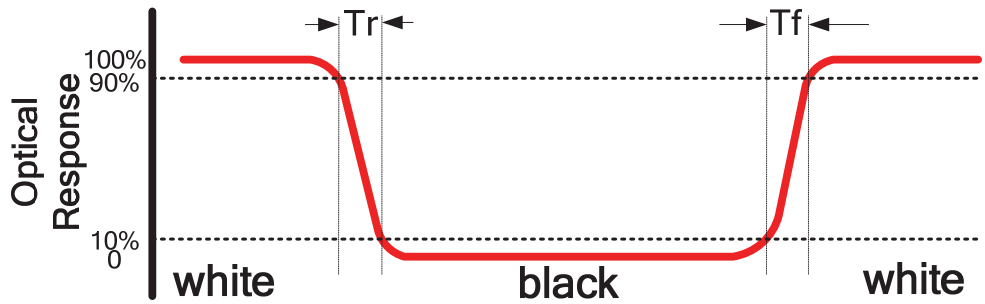

FIG.2. Measuring method for Contrast ratio,surface luminance, Luminance uniformity,CIE (x, y) chromaticity

A : 5 mm
B : 5 mm
H,V : Active Area
Light spot size ∅=5mm, 500mm distance from the LCD surface to detector lens
measurement instrument is TOPCON's luminance meter BM-5

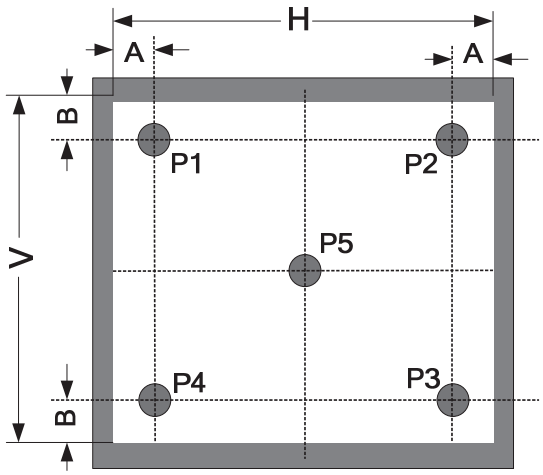

FIG.3. The definition of viewing angle

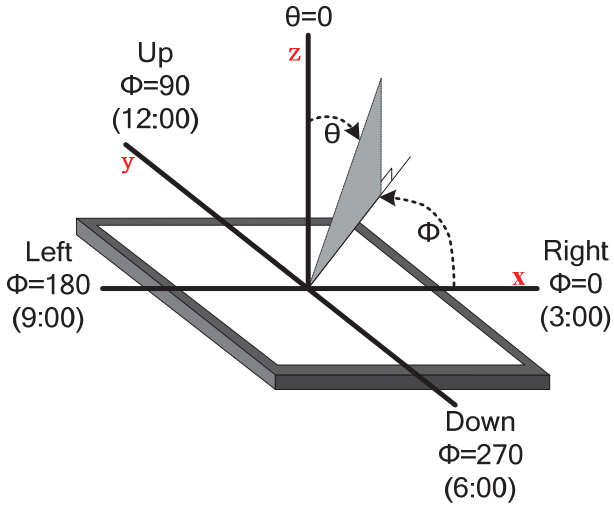

■ INTERFACE DESCRIPTION

Interface NO.	NAME	I/O or connect to	DESCRIPTION	REMARK
1	CLKP	I	Positive polarity of low voltage differential clock signal	
2	VDD	P	A supply voltage to the analog circuit(2.8V)	
3	CLKN	I	Negative polarity of low voltage differential clocksignal	
4	VEE	P	A supply voltage to the digital circuit(1.8V)	
5	GND	P	Ground	
6	B_Sync	P	Serve as a TE (Tearing Effect) output signal	
7	D0P	I	Positive polarity of low voltage differential data signal	
8	RESET	I	Reset input signal	
9	D0N	I	Negative polarity of low voltage differential data signal	
10	LED+	P	Power for LED backlight (Anode)	
11	GND	P	Ground	
12	LED-	P	Power for LED backlight (Cathode)	

■ AC CHARACTERISTICS

High Speed Mode – Data Clock Channel Timing

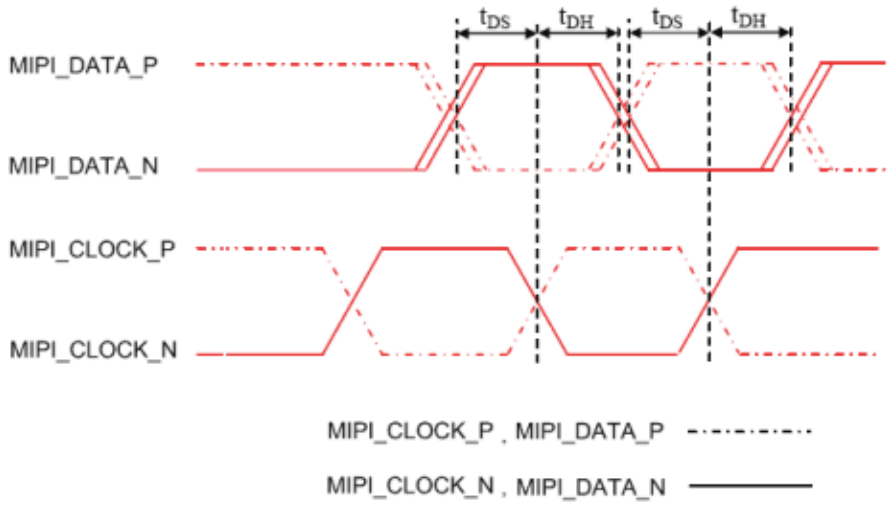

High Speed Mode – Rising and Falling Timings

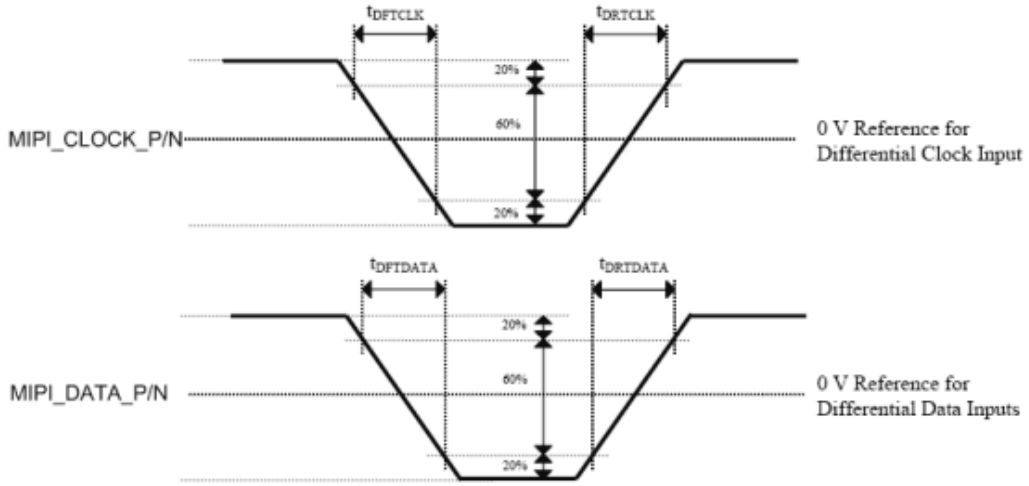

Figure 148: Rising and Falling Timings on Clock and Data Channels

■ POWER SEQUENCE

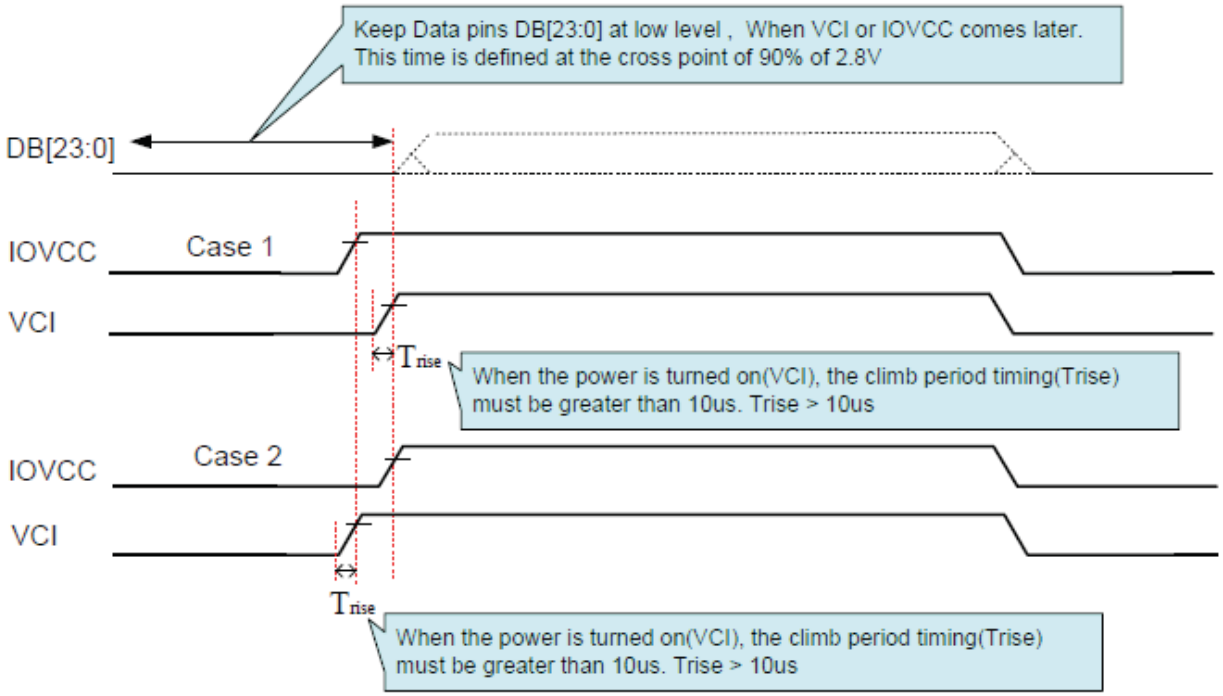

■ REFERENCE APPLICATION CIRCUIT

Please consult our technical department for detail information.

■ RELIABILITY TEST CONDITIONS

No.	Test Item	Test Condition	Inspection after test
1	High Temperature Storage	80±2℃/240 hours	Inspection after 2~4hours storage at room temperature, the sample shall be free from defects: 1.Air bubble in the LCD; 2.Sealleak; 3.Non-display; 4.missing segments; 5.Glass crack; 6.Current Idd is twice higher than initial value.
2	Low Temperature Storage	-30±2℃/240 hours	
3	High Temperature Operating	70±2℃/120 hours	
4	Low Temperature Operating	-20±2℃/120 hours	
5	Temperature Cycle	-20±2℃~25~70±2℃×10cycles (30min.) (5min.) (30min.)	
6	Damp Proof Test	50℃±5℃×90%RH/120 hours	
7	Vibration Test	Frequency：10Hz~55Hz~10Hz Amplitude：1.5mm, X，Y，Z direction for total 3hours (Packing condition)	
8	Dropping test	Drop to the ground from 1m height, one time, every side of carton. (Packing condition)	
9	ESD test	Voltage:±8KV R: 330Ω C: 150pF Air discharge, 10time	

Remark:
1.The test samples should be applied to only one test item.
2.Sample size for each test item is 5~10pcs.
3.For Damp Proof Test, Pure water(Resistance＞10MΩ) should be used.
4.In case of malfunction defect caused by ESD damage, if it would be recovered to normal state after resetting, it would be judged as a good part.
5.EL evaluation should be excepted from reliability test with humidity and temperature: Some defects such as black spot/blemish can happen by natural chemical reaction with humidity and Fluorescence EL has.
6.Failure Judgment Criterion: Basic Specification, Electrical Characteristic, Mechanical Characteristic, Optical Characteristic.

■ INSPECTION CRITERION

This specification is made to be used as the standard acceptance/rejection criteria for Normal LCM Product.

1 Sample plan

Sampling plan according to GB/T2828.1-2003/ISO 2859-1：1999 and ANSI/ASQC Z1.4-1993, normal level 2 and based on:

Major defect: AQL 0.65

Minor defect: AQL 1.5

2. Inspection condition

●Viewing distance for cosmetic inspection is about 30cm with bare eyes, and under an environment of 20~40W light intensity, all directions for inspecting the sample should be within 45°against perpendicular line. (Normal temperature 20~25°C and normal humidity 60±15%RH).

● Driving voltage

The Vop value from which the most optimal contrast can be obtained near the specified Vop in the specification (Within ±0.5V of the typical value at 25°C.).

3. Definition of inspection zone in LCD.

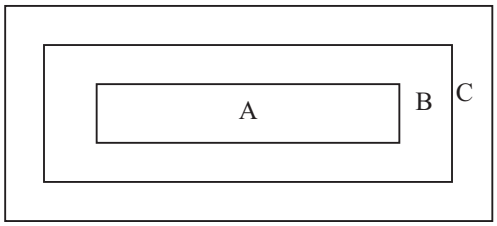

Zone A: character/Digit area

Zone B: viewing area except Zone A (ZoneA+ZoneB=minimum Viewing area)

Zone C: Outside viewing area (invisible area after assembly in customer's product)

Fig.1 Inspection zones in an LCD.

Note: As a general rule, visual defects in Zone C are permissible, when it is no trouble for quality and assembly of customer's product.

4.Inspection Standard

4.1 Major Defect

Item No	Items to be inspected	Inspection Standard	Classification of defects
4.1.1	All functional defects	1) No display 2) Display abnormally 3) Missing vertical，horizontal segment 4) Short circuit 5) Back-light no lighting, flickering and abnormal lighting.	Major
4.1.2	Missing	Missing component	
4.1.3	Outline dimension	Overall outline dimension beyond the drawing is not allowed.	

4.2 Cosmetic Defect

4.2.1 Module Cosmetic Criteria

No.	Item	Judgement Criterion	Partition
1	Difference in Spec.	None allowed	Major
2	Pattern peeling	No substrate pattern peeling and floating	Major
3	Soldering defects	No soldering missing No soldering bridge No cold soldering	Major Major Minor
4	Resist flaw on Printed Circuit Boards	visible copper foil (∅0.5mm or more) on substrate pattern	Minor
5	Accretion of metallic Foreign matter	No accretion of metallic foreign matters (Not exceed ∅0.2mm)	Minor Minor
6	Stain	No stain to spoil cosmetic badly	Minor
7	Plate discoloring	No plate fading, rusting and discoloring	Minor
8	Solder amount 1. Lead parts	a. Soldering side of PCB Solder to form a 'Filet' all around the lead. Solder should not hide the lead form perfectly. (too much) b. Components side (In case of 'Through Hole PCB') Solder to reach the Components side of PCB.	Minor
	2. Flat packages	Either 'Toe' (A) or 'Seal' (B) of the lead to be covered by 'Filet'. Lead form to be assume over solder.	Minor
	3. Chips	(3/2) H ≥ h ≥ (1/2) H	Minor

9	Solder ball/Solder splash	a. The spacing between solder ball and the conductor or solder pad h ≥0.13mm The diameter of solder ball d ≤0.15mm. b. The quantity of solder balls or solder Splashes isn't beyond 5 in 600 mm ^{2} . c. Solder balls/Solder splashes do not violate minimum electrical clearance. d. Solder balls/Solder splashes must be entrapped/encapsulated Or attached to the metal surface . NOTE: Entrapped/encapsulated/attached is intended to mean that normal service environment of the product will not cause a solder ball to become dislodged.	Minor Minor Major Minor

4.2.2Cosmetic Criteria (Non-Operating)

No.	Defect	Judgment Criterion	Partition
1	Spots	In accordance with *Screen Cosmetic Criteria (Operating) No.1*.	Minor
2	Lines	In accordance with *Screen Cosmetic Criteria (Operating) No.2*.	Minor
3	Bubbles in polarizer	Size : d mm / Acceptable Qty in active area d ≤ 0.3 / Disregard 0.3 < d ≤ 1.0 / 3 1.0 < d ≤ 1.5 / 1 1.5 < d / 0	Minor
4	Scratch	In accordance with spots and lines operating cosmetic criteria. When the light reflects on the panel surface, the scratches are not to be remarkable.	Minor
5	Allowable density	Above defects should be separated more than 30mm each other.	Minor
6	Coloration	Not to be noticeable coloration in the viewing area of the LCD panels. Back-lit type should be judged with back-lit on state only.	Minor
7	Contamination	Not to be noticeable.	Minor

4.2.3 Cosmetic Criteria (Operating)

<table>
<tr><th>No.</th><th>Defect</th><th>Judgment Criterion</th><th>Partition</th></tr>
<tr><td>1</td><td>Spots</td><td>A) Clear

<table>
<tr><th>Lcd size</th><th>Size : d mm</th><th>Acceptable Qty in active area</th></tr>
<tr><td rowspan="4">Lcd size≤8.0'</td><td>d≤0.1</td><td>Disregard</td></tr>
<tr><td>0.1＜d≤0.2</td><td>6</td></tr>
<tr><td>0.2＜d≤0.3</td><td>2</td></tr>
<tr><td>0.3 < d</td><td>0</td></tr>
<tr><td rowspan="4">Lcd size＞8.0'</td><td>d ≤0.1</td><td>Disregard</td></tr>
<tr><td>0.1＜d≤0.3</td><td>10</td></tr>
<tr><td>0.3＜d≤0.5</td><td>5</td></tr>
<tr><td>0.5 < d</td><td>0</td></tr>
</table>

Note : Including pin holes and defective dots which must be within one pixel size; Total defective point shall not exceed 6 pcs no more than 8 inch LCD and 10PCS for more than 8 inch LCD.

B) Unclear

<table>
<tr><th>Lcd size</th><th>Size : d mm</th><th>Acceptable Qty in active area</th></tr>
<tr><td rowspan="4">Lcd size≤8.0'</td><td>d≤0.2</td><td>Disregard</td></tr>
<tr><td>0.2＜d≤0.5</td><td>6</td></tr>
<tr><td>0.5＜d≤0.7</td><td>2</td></tr>
<tr><td>0.7＜d</td><td>0</td></tr>
<tr><td rowspan="5">Lcd size ＞8.0'</td><td>d≤0.2</td><td>Disregard</td></tr>
<tr><td>0.2＜d≤0.5</td><td>10</td></tr>
<tr><td>0.5＜d≤0.7</td><td>3</td></tr>
<tr><td>0.7＜d≤1.0</td><td>1</td></tr>
<tr><td>1.0< d</td><td>0</td></tr>
</table>

Note : Total defective point shall not exceed 6 pcs for no more than 8 inch LCD and 10PCS for more than 8 inch LCD.</td><td>Minor</td></tr>
<tr><td>2</td><td>Lines</td><td>A) Clear

Note : ( ) - Acceptable Qty in active area
L - Length (mm)
W - Width (mm)
∞ - Disregard

B) Unclear

‘Clear’ = The shade and size are not changed by V_{op}.
‘Unclear’ = The shade and size are changed by V_{op}.</td><td>Minor</td></tr>
</table>

3	Rubbing line	Not to be noticeable.	Minor
4	Allowable density	Above defects should be separated more than 10mm each other.	Minor
5	Rainbow	Not to be noticeable.	Minor
6	Dot size	To be 95% ~ 105% of the dot size (Typ.) in drawing. Partial defects of each dot (ex. pin-hole) should be treated as 'Spot'. (see *Screen Cosmetic Criteria (Operating) No.1*)	Minor
7	Uneven brightness (only back-lit type module)	Uneven brightness must be BMAX / BMIN ≤ 2 - BMAX : Max. value by measure in 5 points - BMIN : Min. value by measure in 5 points Divide active area into 4 vertically and horizontally. Measure 5 points shown in the following figure. 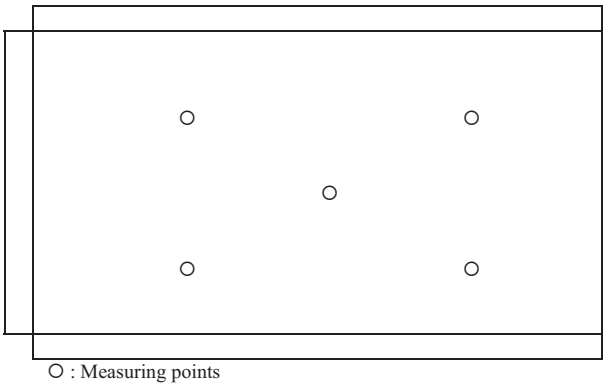 ○ : Measuring points	Minor

Note :

(1) Size : d = (long length + short length) / 2

(2) The limit samples for each item have priority.

(3) Complex defects are defined item by item, but if the numbers of defects are defined in above table, the total number should not exceed 10.

(4) In case of 'concentration', even the spots or the lines of 'disregarded' size should not allowed. Following three situations should be treated as 'concentration'.

- 7 or over defects in circle of ∅5mm.
- 10 or over defects in circle of ∅10mm.
- 20 or over defects in circle of ∅20mm.

■ PACKING SPECIFICATION

Please consult our technical department for detail information.