www.DataSheet4U.com

Ref.

DIMENSIONS

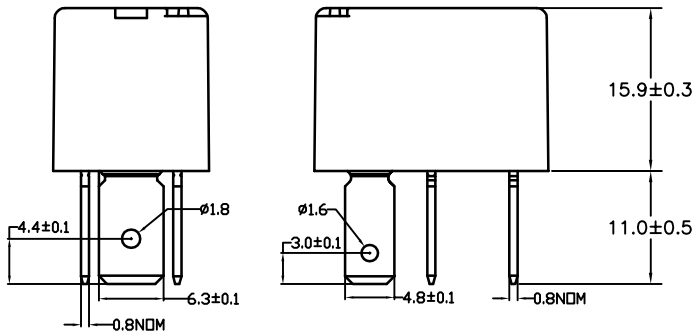

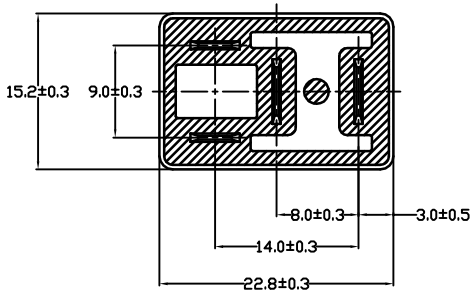

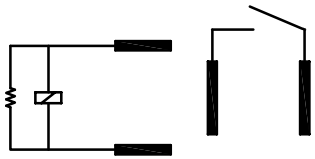

TERMINAL ARRANGEMENT / INTERNAL CONNECTIONS

SPECIFICATION

CONTACT CONFIGURATION	: 1 FORM A
NOMINAL VOLTAGE	: 12V DC
COIL RESISTANCE	: 130 ±10% Ω
VOLTAGE DROP	: 3mV/A MAX. (INITIAL VALUE)
ALLOWABLE LOAD CURRENT	: 20A res@12V DC
PULL IN VOLTAGE	: 7.2V MAX (AT 25°C)
DROP OFF VOLTAGE	: ≥1.5V
ELECTRICAL LIFE	: 2×10^5 OPERATIONS AT RATED LOAD.
MECHANICAL LIFE	: 10^6 OPERATIONS
DIELECTRIC STRENGTH	
BETWEEN OPEN CONTACTS	: 500VRMS
BETWEEN COIL AND CONTACT	: 750VRMS
INSULATION RESISTANCE @25°C,RH 50	: 100M OHMS MIN. @ 500VDC
OPERATE TIME (AT NOMINAL VOLTAGE)	: 7m SEC.(MAX.)
RELEASE TIME (AT NOMINAL VOLTAGE)	: 5m SEC.(MAX.)
AMBIENT TEMPERATURE	: −40°C TO +100°C.
WEIGHT	: 15 GRAM MAX.

PRODUCT CODING

830−1A−12XX

PRODUCT SERIES — 0−STANDARD

CONTACT FORM — 1A

0 − WITHOUT RESISTOR
1 − WITH RESISTOR

CONTACT MATERIAL
0 − SILVER TIN OXIDE
1 − SILVER NICKEL

COIL VOLTAGE
12 − 12VDC

No.	CHANGES

RELEASED ISSUE NO.: 0

ALL DIMENSIONS ARE GIVEN IN MM

TOLERANCE
UNLESS OTHERWISE SPECIFIED
0.X DECIMALS ±0.1
0.XXDECIMALS ±0.05
ANGLES —

MATERIAL
(COMMERCIAL TOLERANCE UNLESS OTHERWISE SPECIFIED)

OEN India Limited
COCHIN

NAME	SPECIFICATION		
FINISH	—		
DRAWN	CHECKED	APPD	SCALE
RMN 09/06/06			2:1

DRG. No. 83−5000−200

www.DataSheet4U.com