ELECTRONICS, INC.
44 FARRAND STREET
BLOOMFIELD, NJ 07003
(973) 748–5089
http://www.nteinc.com

2N5320
Silicon NPN Transistor
High Current, General Purpose
TO–39 Type Package

Absolute Maximum Ratings:

Collector–Emitter Voltage, V_{CEO} 75V
Collector–Base Voltage, V_{CBO} 100V
Emitter–Base Voltage, V_{EBO} 7V
Continuous Collector Current, I_C 2A
Base Current, I_B 1A
Total Device Dissipation (T_C = +25°C), P_D 10W
Derate Above 25°C . . . . . 0.057mW/°C
Operating Junction Temperature Range, T_J . . . . . –65° to +200°C
Storage Temperature Range, T_{stg} . . . . . –65° to +200°C
Thermal Resistance, Junction–to–Case, R_{thJC} . . . . . 17.5°C/W

Electrical Characteristics: (T_A = +25°C unless otherwise specified)

Parameter	Symbol	Test Conditions	Min	Typ	Max	Unit
OFF Characteristics						
Collector–Emitter Breakdown Voltage	$V_{(BR)CEO}$	I_C = 100mA, I_B = 0	75	–	–	V
Collector Cutoff Current	I_{CEX}	V_{CE} = 100V, V_{BE} = 1.5V	–	–	0.1	mA
		V_{CE} = 70V, V_{BE} = 1.5V, T_C = +150°C	–	–	5.0	mA
Emitter Cutoff Current	I_{EBO}	V_{BE} = 7V, I_C = 0	–	–	0.1	mA
ON Characteristics (Note 1)						
DC Current Gain	h_{FE}	I_C = 500mA, V_{CE} = 4V	30	–	130	
		I_C = 1A, V_{CE} = 2V	10	–	–	
Collector–Emitter Saturation Voltage	$V_{CE(sat)}$	I_C = 500mA, I_B = 50mA	–	–	0.5	V
Base–Emitter ON Voltage	$V_{BE(on)}$	I_C = 500mA, V_{CE} = 4V	–	–	1.1	V
Small–Signal Characteristics						
Small–Signal Current Gain	h_{fe}	I_C = 50mA, V_{CE} = 4V, f = 10MHz	5	–	–	
Switching Characteristics						
Turn–On Time	t_{on}	V_{CC} = 30V, I_C = 500mA, I_{B1} = 50mA	–	–	80	ns
Turn–Off Time	t_{off}	V_{CC} = 30V, I_C = 500mA, I_{B1} = I_{B2} = 50mA	–	–	800	ns

Note 1. Pulse Test: Pulse Width ≤ 300μs, Duty Cycle ≤ 2%.

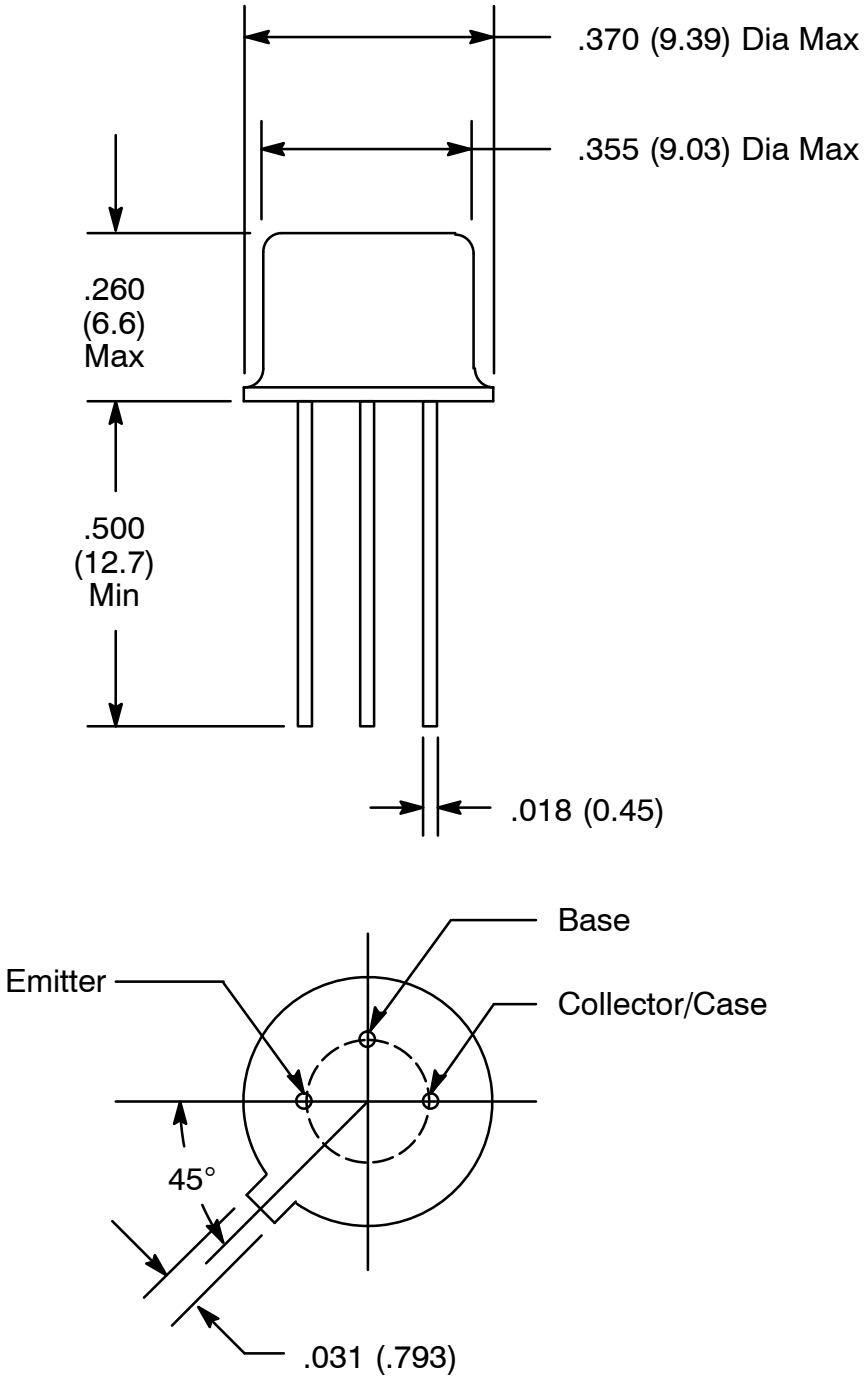
.370 (9.39) Dia Max
.355 (9.03) Dia Max
.260
(6.6)
Max
.500
(12.7)
Min
.018 (0.45)
Base
Emitter
Collector/Case
45°
.031 (.793)