2N3490 (#23102)

RFQ/Sample

NPN Transistor

Package
TO-61(STD)

Division	Lawrence	**Datasheet**	(none)
Mil-Spec	(none)		
Shipping	(none)	**Qual Data**	Contact Microsemi

Maximum Electrical Rating	Symbol	Max	Unit
Power Dissipation	**Power**	115	W
Collector Current	I_C	7.5	A
Breakdown Voltage Collector -to-Base	$B_{V(CBO)}$	80	V
Voltage Collector to Emitter Open	V_{CEO}	60	V
Voltage Emitter to Base Open	BV_{EBO}	10	V

Electrical Rating	Symbol	Min	Typ	Max	Unit
Collector Emitter Saturation Voltage					
(I_B=0.1 mA, I_C=5 mA, T_A=25 ºC,300µ s pulse)	$V_{CE(sat)}$			0.3	V
DC Current Gain					
(I_C=5 mA, T_A=25 ºC,300µ s pulse)	**HFE**	40		120	

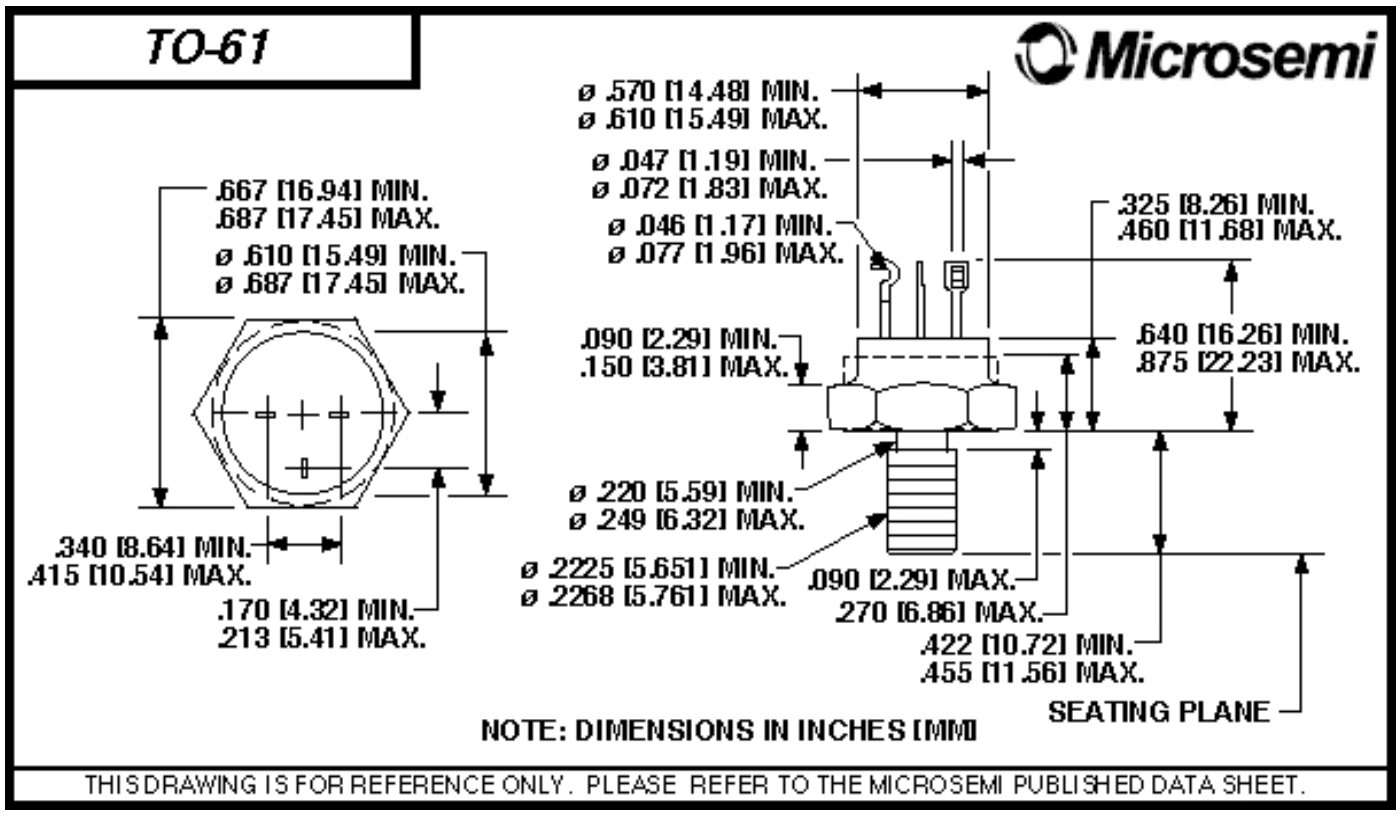

Copyright © 2007 Microsemi Corporation. All rights reserved