First Edition
Dec 10, 2004

Final Revision
******

LCD Module Technical Specification

Type No. **T-51863D150J-FW-A-AE**

液晶之友 电话：020-33819057
Http://www.lcdfriends.com

Approved by (Quality Assurance Division)

Checked by (ACI Engineering Division)

Prepared by (ACI Engineering Division)

No.	Item	Page
--	CONTENTS	1
1	APPLICATION	2
2	OVERVIEW	3
3	ABSOLUTE MAXIMUM RATINGS	4
4	ELECTRICAL CHARACTERISTICS	4
5	INTERFACE PIN CONNECTION	7
6	INTERFACE TIMING	10
7	BLOCK DIAGRAM	15
8	MECHANICAL SPECIFICATION	16
9	OPTICAL CHARACTERISTICS	18
10	RELIABILITY TEST CONDITION	20
11	INSPECTION STANDARDS	21
12	HANDLING PRECAUTIONS FOR TFT-LCD MODULE	22
--	PACKAGING SPECIFICATION	25
--	PRODUCTS NUMBER LABELING FORMS	29
--	LAMP UNIT for 15.0”XGA	31

www.DataSheet4U.com

1. APPLICATION

This specification applies to color TFT-LCD module, T-51863D150J-FW-A-AE.

These specification papers are the proprietary product of OPTREX and include materials protected under copyright of OPTREX. No part of this document may be reproduced in any form or by any means without the express written permission of OPTREX.

OPTREX does not assume any liability for infringement of patents, copyrights or other intellectual property rights of third parties by or arising from use of a product specified in this document. No license, express, implied or otherwise, is granted under any patents, copyrights or other intellectual property rights of OPTREX or of others.

OPTREX classifies the usage of the TFT-LCD module as follows. Please confirm the usage before using the product.

(1) Standard Usage

Computers, office equipment, factory automation equipment, test and measurement equipment, communications, transportation equipment(automobiles, ships, trains, etc.), provided, however, that operation is not influenced by TFT-LCD directly.

(2) Special Usage

Medical equipment, safety equipment, transportation equipment, provided, however, that TFT-LCD is necessary to its operation.

(3) Specific Usage

Cockpit Equipment, military systems, aerospace equipment, nuclear reactor control systems, life support systems and any other equipment. OPTREX should make a contract that stipulate apportionment of responsibilities between OPTREX and our customer.

The product specified in this document is designed for “Standard Usage” unless otherwise specified in this document. If customers intend to use the product for applications other than those specified for “Standard Usage”, they should contact OPTREX sales representative in advance.

OPTREX has been making continuous effort to improve the reliability of its products. Customers should implement sufficient reliability design of their application equipments such as redundant system design, fail-safe functions, anti-failure features.

OPTREX assumes no responsibility for any damage resulting from the use of the product that does not comply with the instructions and the precautions specified in this document.

Please contact and consult a OPTREX sales representative for any questions regarding this product.

2. OVERVIEW

T-51863D150J-FW-A-AE is 15.0” color TFT-LCD (Thin Film Transistor Liquid Crystal Display) modules composed of LCD panel, driver ICs, control circuit, and backlight unit.

By applying 6 bit or 8 bit digital data, 1024 × 768, 260K-color or 16.7M-color images are displayed on the 15.0” diagonal screen. Input power voltage is 3.3 V for LCD driving.
The type of data and control signals are digital and transmitted via LVDS interface per Typ. 65 MHz clock cycle.

Inverter for backlight is not included in this module. General specifications are summarized in the following table:

ITEM	SPECIFICATION
Display Area (mm)	304.1 (H) × 228.1 (V) (15.0-inch diagonal)
Number of Dots	1024 × 3 (H) × 768 (V)
Pixel Pitch (mm)	0.297 (H) × 0.297 (V)
Color Pixel Arrangement	RGB vertical stripe
Display Mode	Normally white TN
Number of Color	260K(6 bit/color)16.7M(8 bit/color)
Brightness (cd/m^2)	450
Wide Viewing Angle Technology	Optical Compensation Film
Viewing Angle (CR ≥ 10)	-75~75° (H) -60~50° (V)
Surface Treatment	Anti-glare and hard-coating 3H
Electrical Interface	LVDS(6 bit/8 bit)
Optimum Viewing Angle (Contrast ratio)	6 o’clock
Module Size (mm)	326.0 (W) × 255.0 (H) × 15.9 (D)
Module Mass (g)	1310
Backlight Unit	CCFL, 4-tubes, edge-light, replaceable

Characteristic value without any note is typical value.

3. ABSOLUTE MAXIMUM RATINGS

ITEM	SYMBOL	MIN.	MAX.	UNIT
Power Supply Voltage for LCD	VCC	0	4.0	V
Logic Input Voltage	VI	-0.3	VCC+0.3	V
Lamp Voltage	VL	0	2500	Vrms
Lamp Current	IL	0	10.0	mArms
Lamp Frequency	FL	--	100	kHz
Operation Temperature(Panel) Note 1,2)	$T_{op(Panel)}$	–20	70	°C
Operation Temperature(Ambient) Note 2)	$T_{op(Ambient)}$	–20	70	°C
Storage Temperature Note 2)	T_{stg}	–20	80	°C

[Note]

1) Measured at the center of active area and at the center of panel back surface

2) Top,Tstg ≤ 40°C : 90%RH max. without condensation

Top,Tstg > 40°C : Absolute humidity shall be less than the value of 90%RH at 40°C without condensation.

4. ELECTRICAL CHARACTERISTICS

(1) TFT- LCD Ambient Temperature : Ta = 25°C

ITEM	SYMBOL	MIN.	TYP.	MAX.	UNIT	Remarks
Power Supply Voltage for LCD	VCC	3.0	3.3	3.6	V	*1)
Power Supply Current for LCD	ICC	--	410	700	mA	*2)
Permissive Input Ripple Voltage	VRP	--	--	100	mVp-p	VCC = +3.3 V

*1) Power and signals sequence:

0.5 ≤ t1 ≤ 10 ms 500 ms ≤ t4

0 ≤ t2 ≤ 50 ms 200 ms ≤ t5

0 < t3 ≤ 50 ms 0 ≤ t6

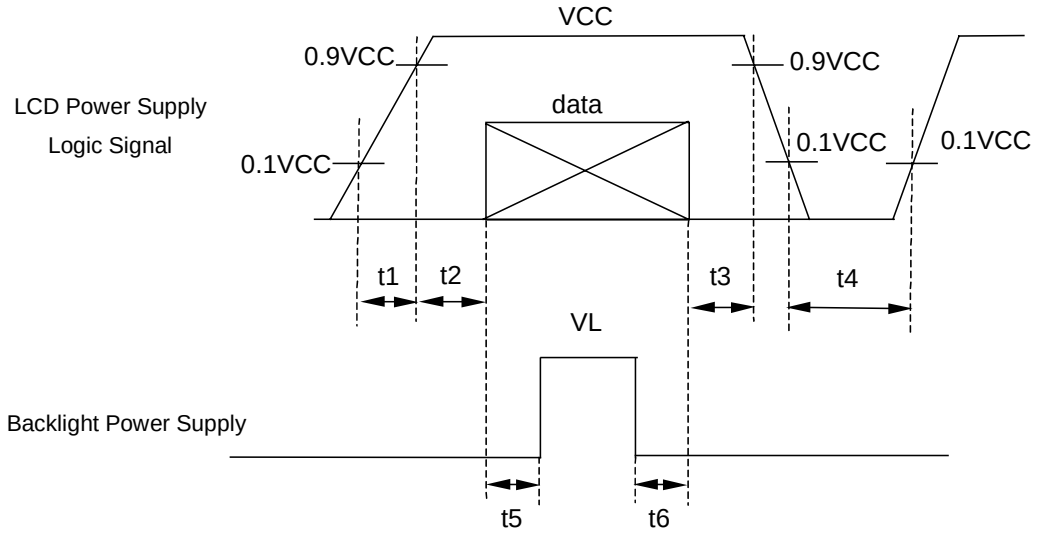

data: RGB DATA, DCLK, HD, VD, DENA

VCC-dip conditions:

1) When 2.6 V ≤ VCC < 3.0 V, td ≤ 10 ms
2) When VCC < 2.6 V

VCC-dip conditions should also follow the power and signals sequence.

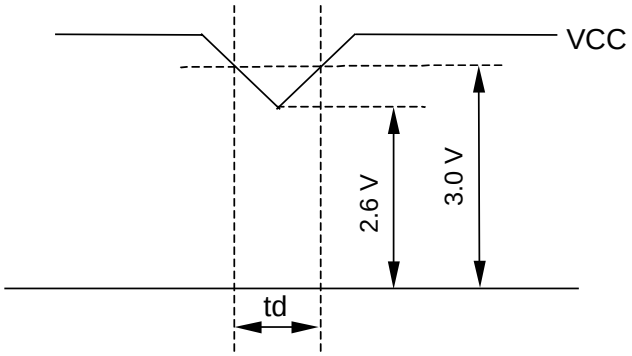

*2) Typical current condition:

64-gray-bar-pattern(6 bit)
256-gray-bar-pattern(8 bit)
768 line mode
VCC = +3.3 V, f_H = 48.4 kHz, f_V = 60 Hz, f_{CLK} = 65 MHz

(2) Backlight Ta = 25°C

ITEM	SYMBOL	MIN.	TYP.	MAX.	UNIT	Remarks
Lamp Voltage	VL	--	620	--	Vrms	IL = 6.5 mArms
Lamp Current	IL	3.5	6.5	8.0	mArms	*1),*5)
Lamp Frequency	FL	40	--	70	kHz	*2)
Starting Lamp Voltage	VS	1300	--	--	Vrms	Ta = 25°C
		1500	--	--	Vrms	Ta = 0°C
		1650	--	--	Vrms	Ta = –20°C
Lamp Life Time	LT	50000	--	--	h	*3),*4) IL = 6.5 mArms, Continuous Operation

*1) Lamp Current measurement method (The current meter is inserted in low voltage line.)

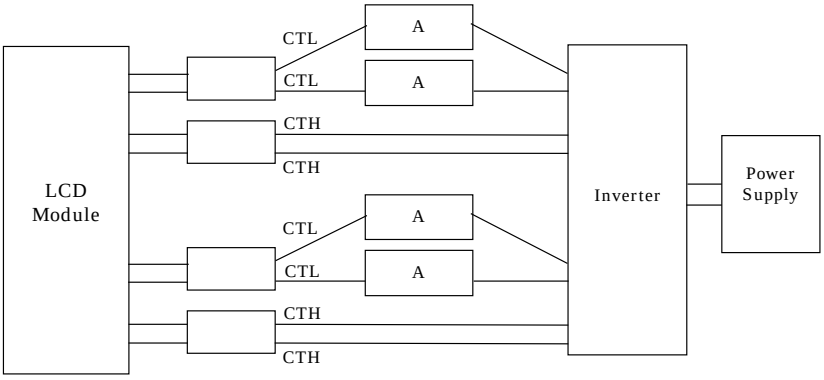

*2) Lamp frequency of inverter may produce interference with horizontal synchronous frequency, and this may cause horizontal beat on the display. Therefore, please adjust lamp frequency, and keep inverter as far from module as possible or use electronic shielding between inverter and module to avoid the interference.

*3) Lamp life time is defined as the time either when the brightness becomes 50% of the initial value, or when the starting lamp voltage does not meet the value specified in this table.

*4) The life time of the backlight depends on the ambient temperature. The life time will decrease under low/high temperature.

*5) Please use the inverter which has symmetrical current wave form as follows,

The degree of unbalance: less than 10%

The ratio of wave height: less than $\sqrt{2}$ ±10%

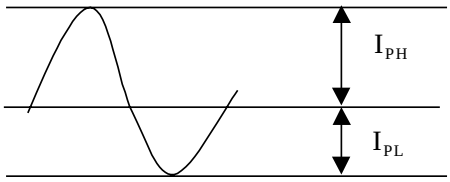

I_{PH}: High side peak

I_{PL}: Low side peak

The degree of unbalance = $|I_{PH} - I_{PL}| / Irms \times 100(\%)$

The ratio of wave height = I_{PH}(or I_{PL}) / Irms

CURRENT WAVE FORM

5. INTERFACE PIN CONNECTION

(1) CN 1(Interface Signal)

Used Connector: DF14H-20P-1.25H(HIROSE)

Corresponding connector: DF14-20S-1.25C(HIROSE)

Pin No.	Symbol	Function(ISP 6 bit compatibility mode)		Function(ISP 8 bit compatibility mode)
		6 bit input	8 bit input	
1	VCC	+3.3 V Power supply		←
2	VCC	+3.3 V Power supply		←
3	GND	GND		←
4	GND	GND		←
5	Link 0-	R0, R1, R2, R3, R4, R5, G0	R2, R3, R4, R5, R6, R7, G2	R0, R1, R2, R3, R4, R5, G0
6	Link 0+	R0, R1, R2, R3, R4, R5, G0	R2, R3, R4, R5, R6, R7, G2	R0, R1, R2, R3, R4, R5, G0
7	GND	GND		←
8	Link 1-	G1, G2, G3, G4, G5, B0, B1	G3, G4, G5, G6, G7, B2, B3	G1, G2, G3, G4, G5, B0, B1
9	Link 1+	G1, G2, G3, G4, G5, B0, B1	G3, G4, G5, G6, G7, B2, B3	G1, G2, G3, G4, G5, B0, B1
10	GND	GND		←
11	Link 2-	B2, B3, B4, B5, HD, VD, DENA	B4, B5, B6, B7, HD, VD, DENA	B2, B3, B4, B5, HD, VD, DENA
12	Link 2+	B2, B3, B4, B5, HD, VD, DENA	B4, B5, B6, B7, HD, VD, DENA	B2, B3, B4, B5, HD, VD, DENA
13	GND	GND		←
14	CLKIN-	Clock -		←
15	CLKIN+	Clock +		←
16	GND	GND		←
17	Link3-	See: *2)	R0, R1, G0, G1, B0, B1	R6, R7, G6, G7, B6, B7
18	Link3+	See: *2)	R0, R1, G0, G1, B0, B1	R6, R7, G6, G7, B6, B7
19	MODE	Low=ISP 6 bit compatibility mode		High=ISP 8 bit compatibility mode
20	SC	Scan direction control (Low : Normal , High : Reverse)		←

*1) The shielding case is connected with GND

*2) Recommended wiring of Pin 17,18 (6 bit input)

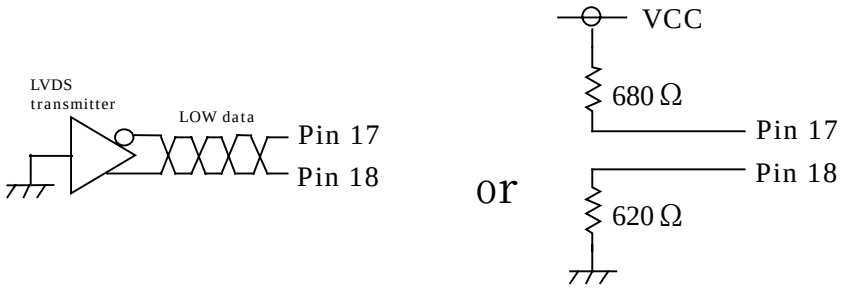

(2) CN 2,4(Backlight)

Backlight-side connector: BHSR-02VS-1(JST)

Inverter-side connector: SM02B-BHSS-1-TB

Pin No.	Symbol	Function
1, 2	CTH	VBLH（High Voltage）

[Note]

VBLH-VBLL = VL

(3) CN 3,5(Backlight)

Backlight-side connector: BHR-02VS-1(JST)

Inverter-side connector: SM02(4.0)B-BHS-1-TB

Pin No.	Symbol	Function
1, 2	CTL	VBLL（Low Voltage）

[Note]

VBLH-VBLL = VL

(4) ISP data mapping

a. ISP 6 bit compatibility mode(6 bit input)

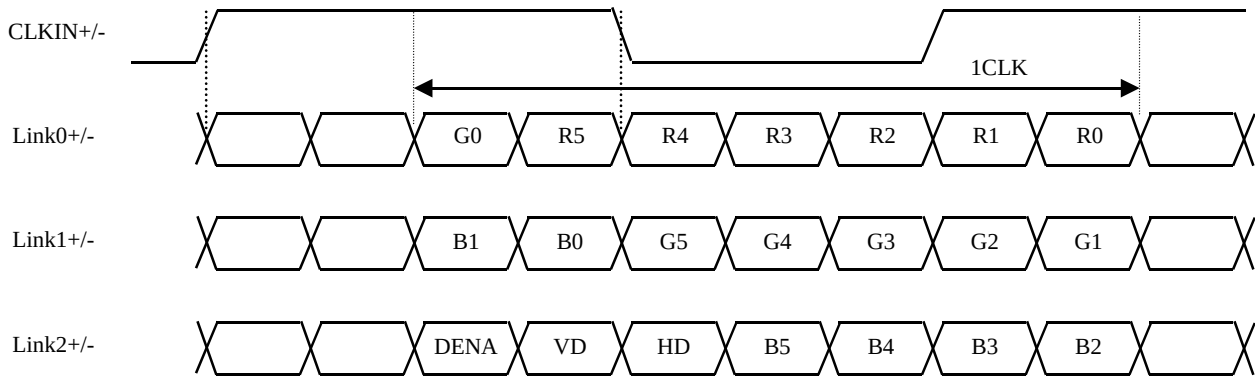

b. ISP 6 bit compatibility mode(8 bit input)

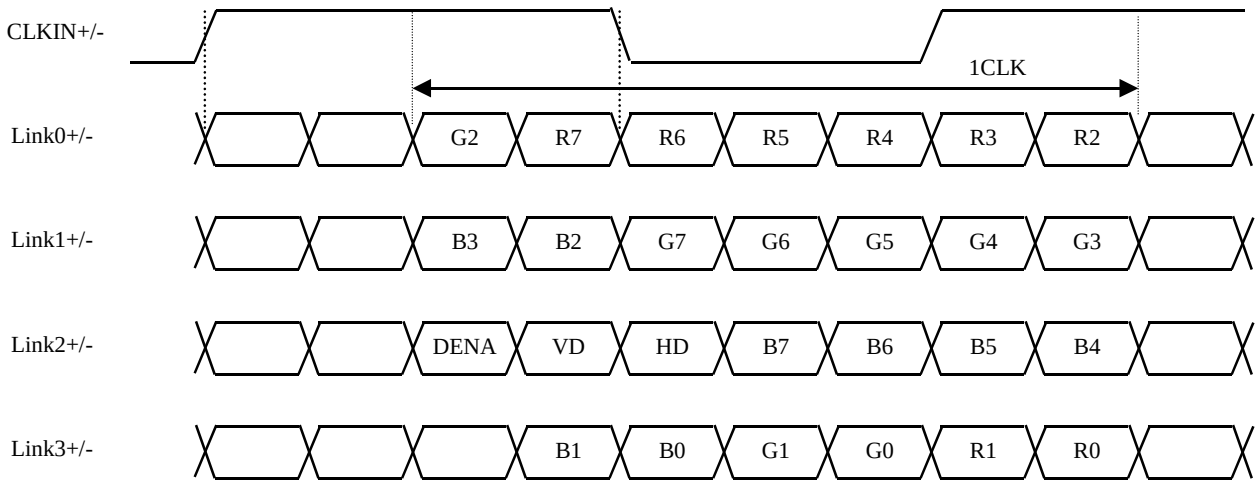

c. ISP 8 bit compatibility mode

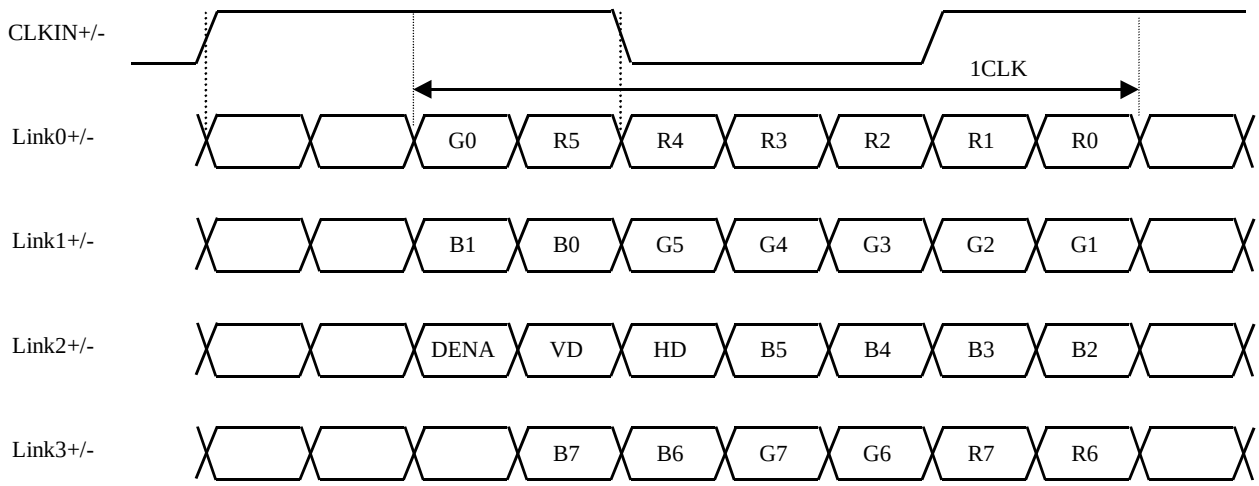

6. INTERFACE TIMING

LVDS transmitter input signal

(1) Timing Specifications

ITEM		SYMBOL	MIN.	TYP.	MAX.	UNIT
DCLK	Frequency	f_{CLK}	50	65	80	MHz
	Period	t_{CLK}	12.5	15.4	20	ns
DENA	Horizontal Active Time	t_{HA}	1024	1024	1024	t_{CLK}
	Horizontal Front Porch	t_{HFP}	0	24	--	t_{CLK}
	Horizontal Back Porch	t_{HBP}	4	296	--	t_{CLK}
	Vertical Active Time	t_{VA}	768	768	768	t_H
	Vertical Front Porch	t_{VFP}	2	3	--	t_H
	Vertical Back Porch	t_{VBP}	1	35	--	t_H
HD	Frequency	f_H	42.4	48.4	60	kHz
	Period	t_H	16.6	20.7	23.6	μs
	Low Width	t_{WHL}	1	136	--	t_{CLK}
VD	Frequency	f_V	55	60	75	Hz
	Period	t_V	13.3	16.7	18.2	ms
	Low Width	t_{WVL}	5	6	--	t_H

[Note]

1) Polarities of HD and VD are negative in this specification.
2) DENA (Data Enable) should always be positive polarity as shown in the timing specification.
3) DCLK should appear during all invalid period, and HD should appear during invalid period of frame cycle.
4) LVDS timing follows the timing specifications of LVDS receiver IC: THC63LVDF84A(Thine).
5) $t_{VA} + t_{VFP} + t_{VBP} \leq 1024$
6) $t_{HFP} + t_{HBP} < 512$

(2) Timing Chart

a. Horizontal Timing Chart

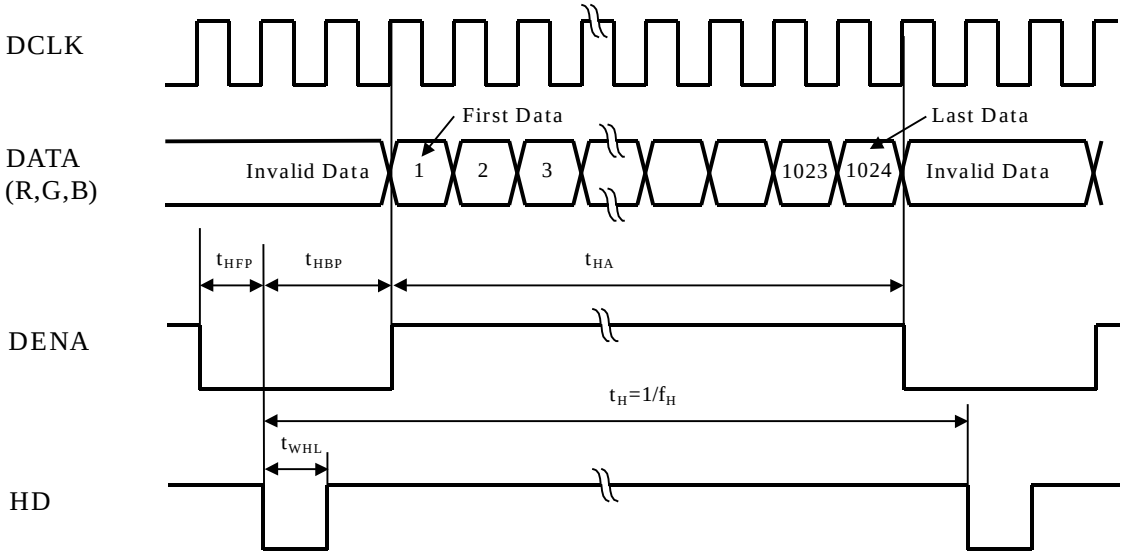

b. Vertical Timing Chart

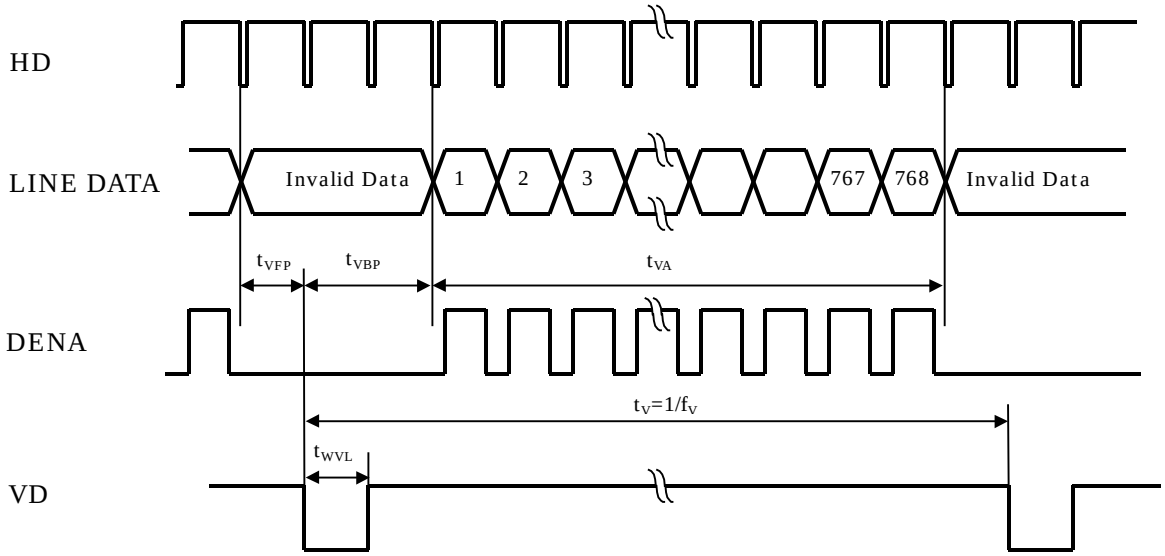

(3) Color Data Assignment

a. 6 bit input

COLOR		INPUT DATA																	
		R DATA						G DATA						B DATA					
		R5	R4	R3	R2	R1	R0	G5	G4	G3	G2	G1	G0	B5	B4	B3	B2	B1	B0
		MSB					LSB	MSB					LSB	MSB					LSB
BASIC COLOR	BLACK	0	0	0	0	0	0	0	0	0	0	0	0	0	0	0	0	0	0
	RED(63)	1	1	1	1	1	1	0	0	0	0	0	0	0	0	0	0	0	0
	GREEN(63)	0	0	0	0	0	0	1	1	1	1	1	1	0	0	0	0	0	0
	BLUE(63)	0	0	0	0	0	0	0	0	0	0	0	0	1	1	1	1	1	1
	CYAN	0	0	0	0	0	0	1	1	1	1	1	1	1	1	1	1	1	1
	MAGENTA	1	1	1	1	1	1	0	0	0	0	0	0	1	1	1	1	1	1
	YELLOW	1	1	1	1	1	1	1	1	1	1	1	1	0	0	0	0	0	0
	WHITE	1	1	1	1	1	1	1	1	1	1	1	1	1	1	1	1	1	1
RED	RED(1)	0	0	0	0	0	1	0	0	0	0	0	0	0	0	0	0	0	0
	RED(2)	0	0	0	0	1	0	0	0	0	0	0	0	0	0	0	0	0	0
	RED(62)	1	1	1	1	1	0	0	0	0	0	0	0	0	0	0	0	0	0
	RED(63)	1	1	1	1	1	1	0	0	0	0	0	0	0	0	0	0	0	0
GREEN	GREEN(1)	0	0	0	0	0	0	0	0	0	0	0	1	0	0	0	0	0	0
	GREEN(2)	0	0	0	0	0	0	0	0	0	0	1	0	0	0	0	0	0	0
	GREEN(62)	0	0	0	0	0	0	1	1	1	1	1	0	0	0	0	0	0	0
	GREEN(63)	0	0	0	0	0	0	1	1	1	1	1	1	0	0	0	0	0	0
BLUE	BLUE(1)	0	0	0	0	0	0	0	0	0	0	0	0	0	0	0	0	0	1
	BLUE(2)	0	0	0	0	0	0	0	0	0	0	0	0	0	0	0	0	1	0
	BLUE(62)	0	0	0	0	0	0	0	0	0	0	0	0	1	1	1	1	1	0
	BLUE(63)	0	0	0	0	0	0	0	0	0	0	0	0	1	1	1	1	1	1

[Note]

1) Definition of gray scale

Color (n) --- n indicates gray scale level.

Higher n means brighter level.

2) Data

1:High, 0: Low

b. 8 bit input

COLOR		INPUT DATA																							
		R DATA								G DATA								B DATA							
		R7	R6	R5	R4	R3	R2	R1	R0	G7	G6	G5	G4	G3	G2	G1	G0	B7	B6	B5	B4	B3	B2	B1	B0
		MSB							LSB	MSB							LSB	MSB							LSB
BASIC COLOR	BLACK	0	0	0	0	0	0	0	0	0	0	0	0	0	0	0	0	0	0	0	0	0	0	0	0
	RED(255)	1	1	1	1	1	1	1	1	0	0	0	0	0	0	0	0	0	0	0	0	0	0	0	0
	GREEN(255)	0	0	0	0	0	0	0	0	1	1	1	1	1	1	1	1	0	0	0	0	0	0	0	0
	BLUE(255)	0	0	0	0	0	0	0	0	0	0	0	0	0	0	0	0	1	1	1	1	1	1	1	1
	CYAN	0	0	0	0	0	0	0	0	1	1	1	1	1	1	1	1	1	1	1	1	1	1	1	1
	MAGENTA	1	1	1	1	1	1	1	1	0	0	0	0	0	0	0	0	1	1	1	1	1	1	1	1
	YELLOW	1	1	1	1	1	1	1	1	1	1	1	1	1	1	1	1	0	0	0	0	0	0	0	0
	WHITE	1	1	1	1	1	1	1	1	1	1	1	1	1	1	1	1	1	1	1	1	1	1	1	1
RED	RED(1)	0	0	0	0	0	0	0	1	0	0	0	0	0	0	0	0	0	0	0	0	0	0	0	0
	RED(2)	0	0	0	0	0	0	1	0	0	0	0	0	0	0	0	0	0	0	0	0	0	0	0	0
	RED(255)	1	1	1	1	1	1	1	1	0	0	0	0	0	0	0	0	0	0	0	0	0	0	0	0
GREEN	GREEN(1)	0	0	0	0	0	0	0	0	0	0	0	0	0	0	0	1	0	0	0	0	0	0	0	0
	GREEN(2)	0	0	0	0	0	0	0	0	0	0	0	0	0	0	1	0	0	0	0	0	0	0	0	0
	GREEN(255)	0	0	0	0	0	0	0	0	1	1	1	1	1	1	1	1	0	0	0	0	0	0	0	0
BLUE	BLUE(1)	0	0	0	0	0	0	0	0	0	0	0	0	0	0	0	0	0	0	0	0	0	0	0	1
	BLUE(2)	0	0	0	0	0	0	0	0	0	0	0	0	0	0	0	0	0	0	0	0	0	0	1	0
	BLUE(255)	0	0	0	0	0	0	0	0	0	0	0	0	0	0	0	0	1	1	1	1	1	1	1	1

[Note]

1) Definition of gray scale

Color (n) --- n indicates gray scale level.

Higher n means brighter level.

2) Data

1:High, 0: Low

(4) Display Position and Scan Direction

D(X,Y) shows the data number of input signal for LCD panel signal processing PCB.

SC: Low

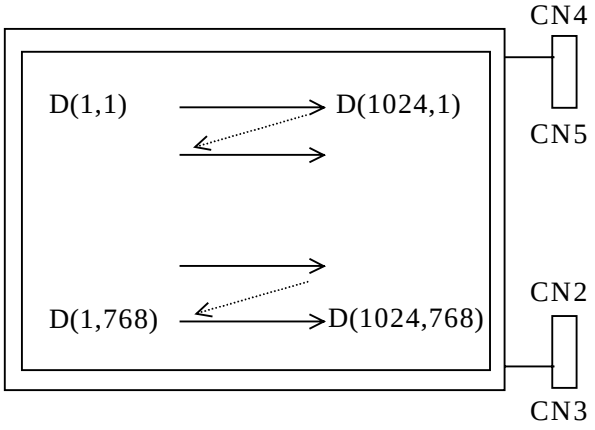

SC: High

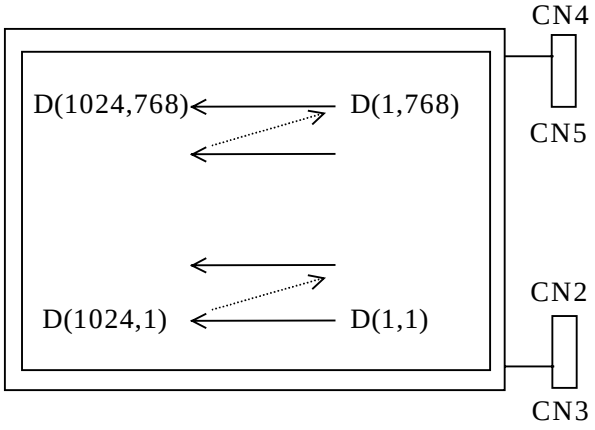

7. BLOCK DIAGRAM

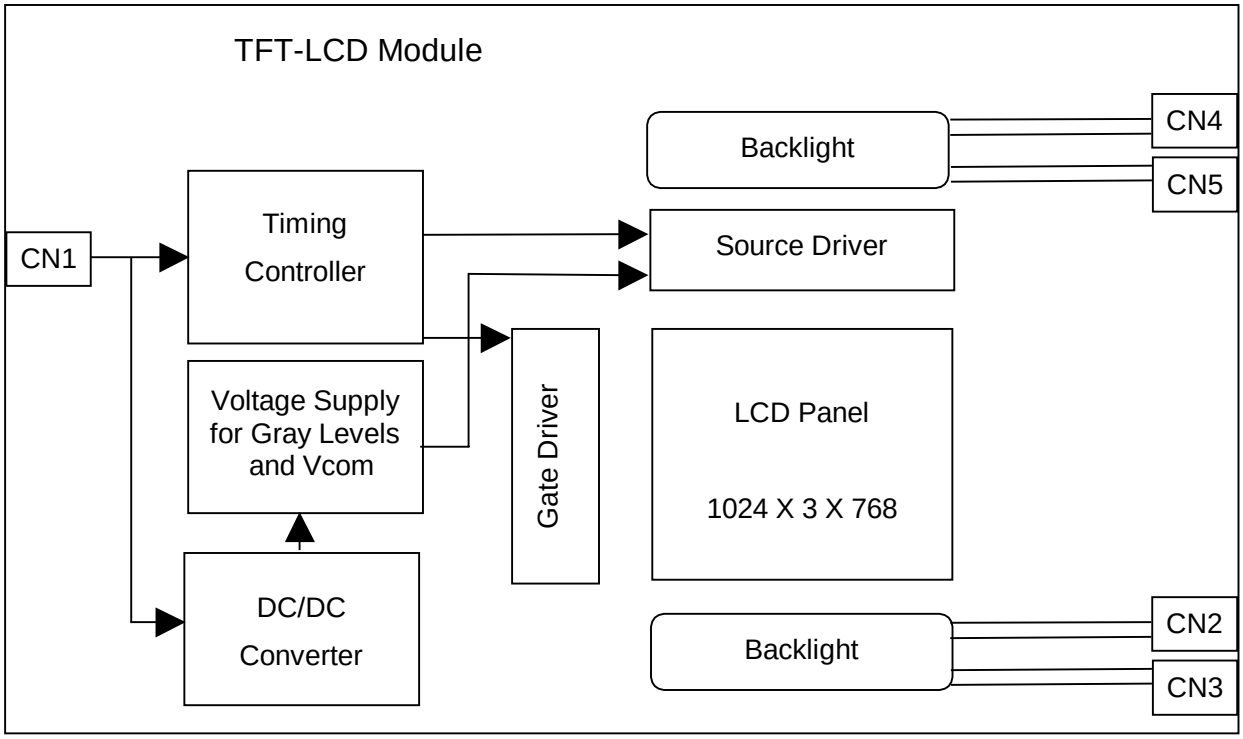

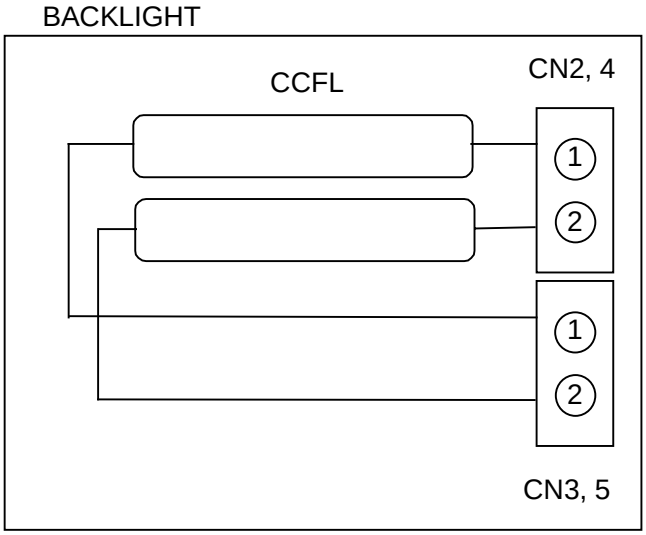

8. MECHANICAL SPECIFICATIONS

(1) Front side

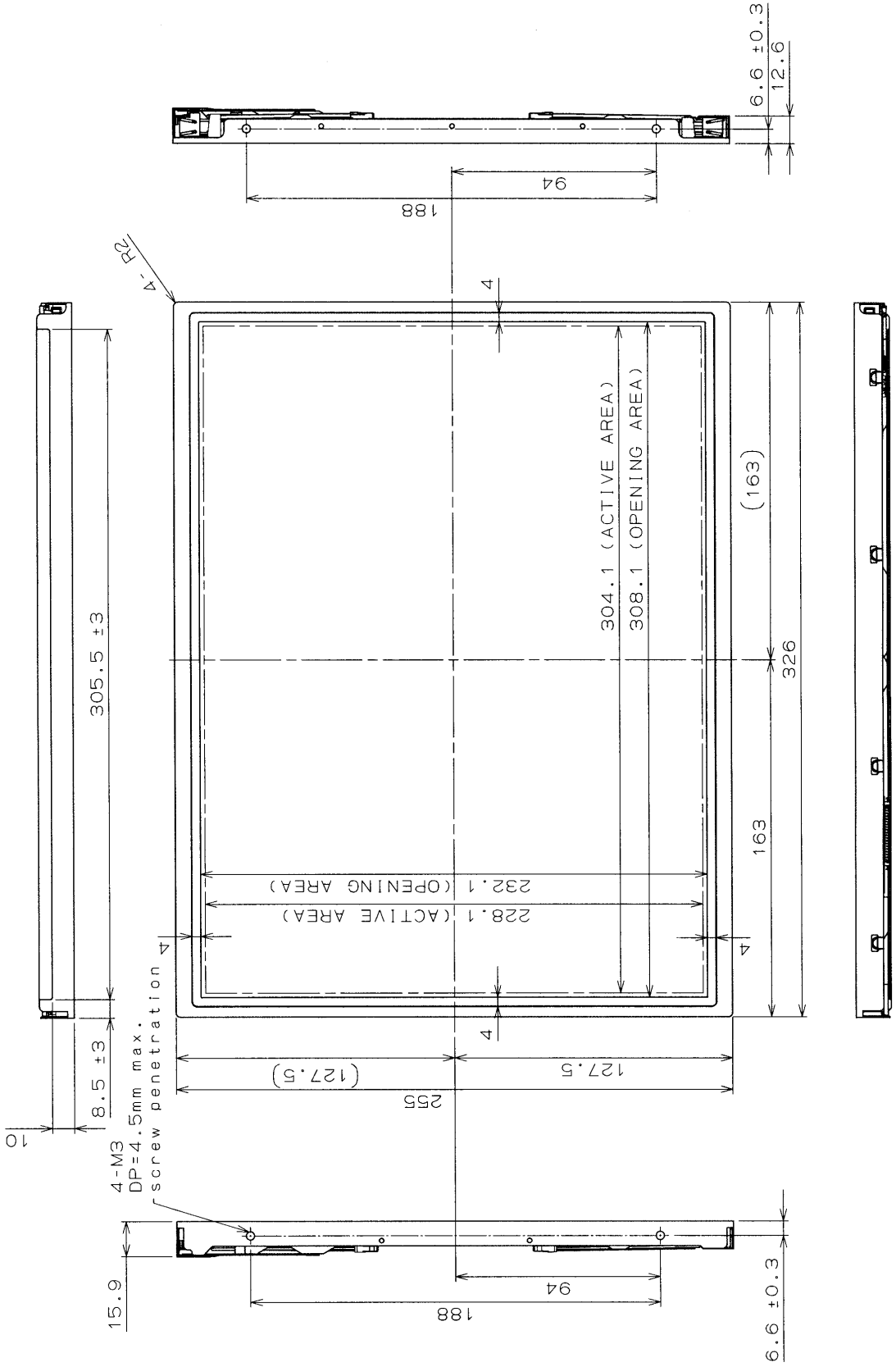

1)Tolerance is ±0.5mm unless noted.
2)Except for thickness of PET film.

(Unit: mm)

(2) Rear side

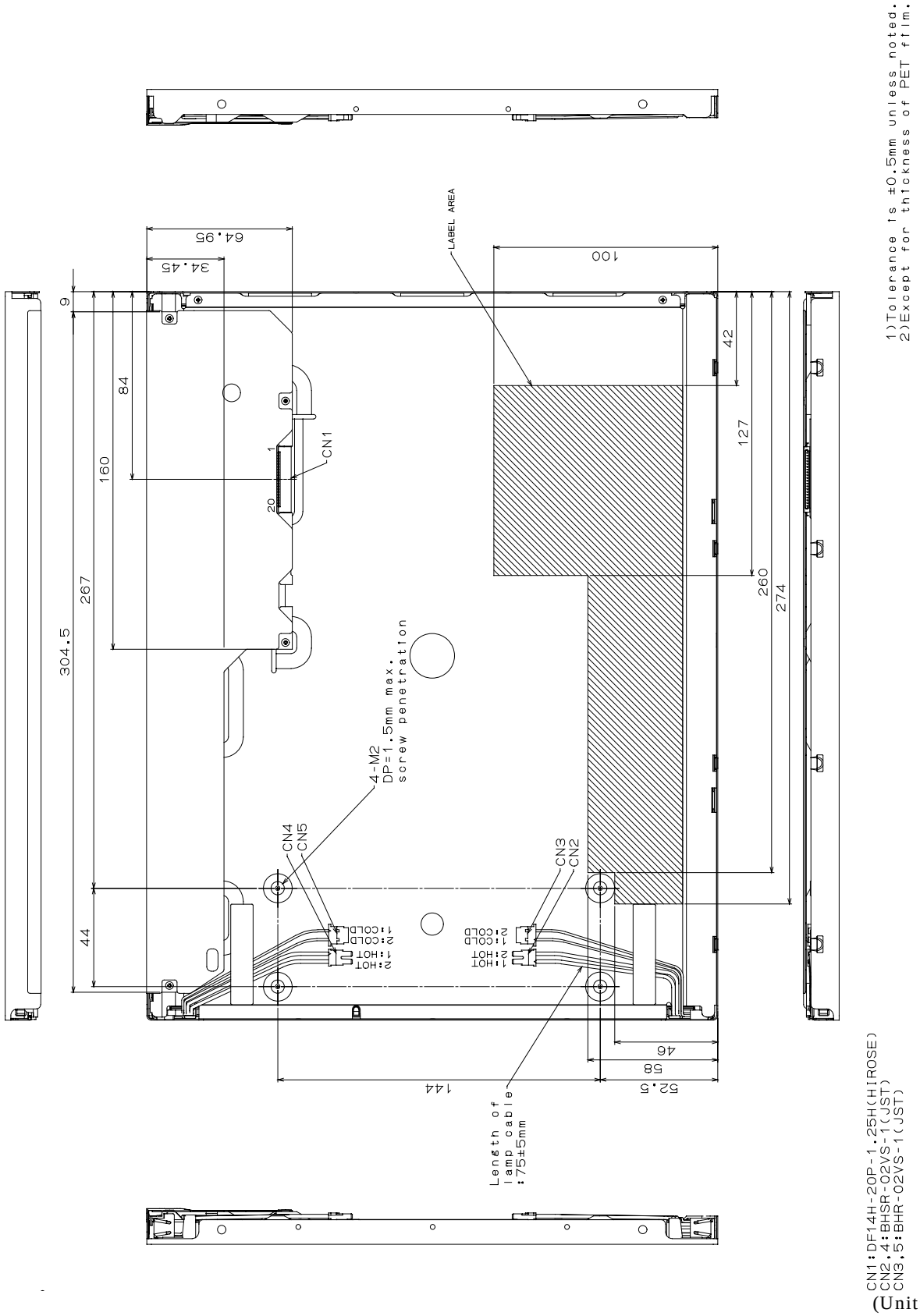

(Unit: mm)

[Note]

We recommend you referring to the detailed drawing for your design.
Please contact our company sales representative when you need the detailed drawing.

9. OPTICAL CHARACTERISTICS

Ta = 25°C, VCC = 3.3 V, Input Signals: Typ. Values shown in Section 6

ITEM		SYMBOL	CONDITION	MIN.	TYP.	MAX.	UNIT	Remarks
Contrast Ratio		CR	$\theta = \phi = 0°$	300	450	--	--	*1)*2)*6)
Luminance		Lw	$\theta = \phi = 0°$	360	450	--	cd/m²	*1)*3)*6)
Luminance Uniformity		ΔLw	$\theta = \phi = 0°$	--	--	30	%	*1)*4)*6)
Response Time		tr	$\theta = \phi = 0°$	--	15	--	ms	*1)*5)*6)
		tf	$\theta = \phi = 0°$	--	25	--	ms	*1)*5)*6)
Viewing Angle	Horizontal	ϕ	CR ≥ 10	-65~65	-75~75	--	°	*1)*6)
	Vertical	θ		-50~40	-60~50	--	°	*1)*6)
	Horizontal	ϕ	CR ≥ 5	-70~70	-80~80	--	°	*1)*6)
	Vertical	θ		-70~60	-80~70	--	°	*1)*6)
Image Sticking		tis	2 h	--	--	2	s	*7)
Color Coordinates	Red	Rx	$\theta = \phi = 0°$	0.575	0.605	0.635	--	*1) *6)
		Ry		0.310	0.340	0.370		
	Green	Gx		0.281	0.311	0.341		
		Gy		0.535	0.565	0.595		
	Blue	Bx		0.124	0.154	0.184		
		By		0.100	0.130	0.160		
	White	Wx		0.283	0.313	0.343		
		Wy		0.299	0.329	0.359		

[Note]

These items are measured using CS1000(MINOLTA) for color coordinates, EZContrast(ELDIM) for viewing angle, and CS1000 or BM-5A(TOPCON) for others under the dark room condition (no ambient light) after more than 30 minutes from turning on the lamp unless noted.

Condition: IL = 6.5 mArms, Inverter frequency: 50 kHz

*1) Measurement Point

Contrast Ratio, Luminance, Response Time, Viewing Angle, Color Coordinates: Display Center

Luminance Uniformity: point 1~5 shown in a figure below

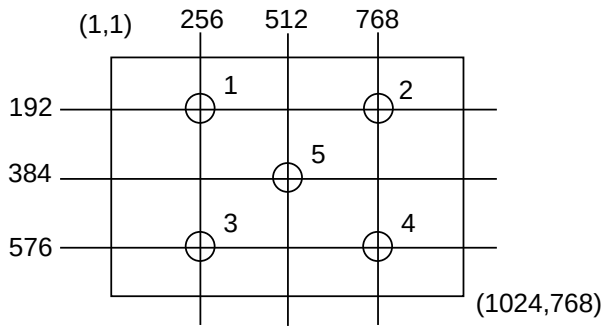

*2) Definition of Contrast Ratio

CR=ON (White) Luminance / OFF(Black) Luminance

*3) Definition of Luminance

Lw= ON (White) Luminance

*4) Definition of Luminance Uniformity

$\Delta Lw=[Lw(MAX)/Lw(MIN)-1] \times 100$

*5) Definition of Response Time

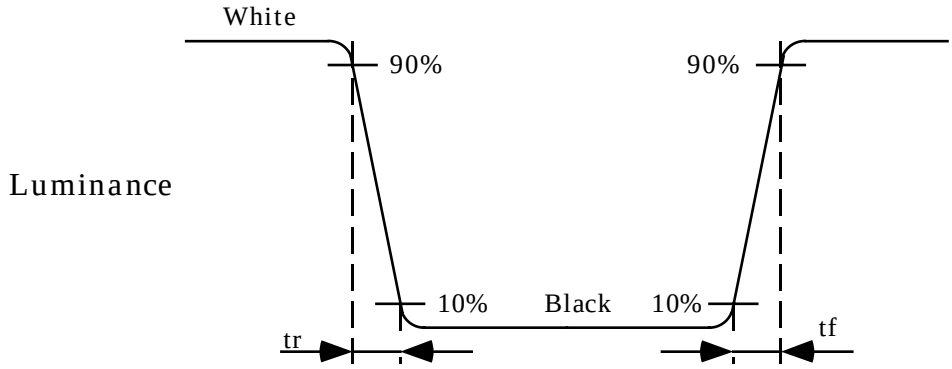

*6) Definition of Viewing Angle(θ , ϕ)

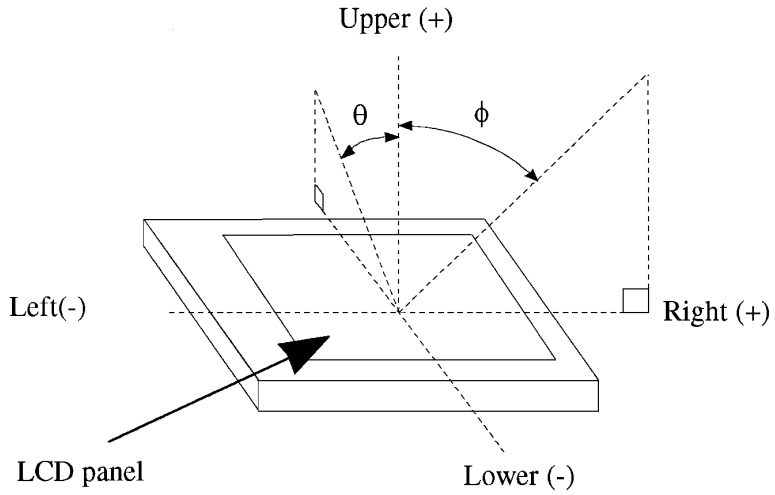

*7) Image Sticking

Continuously display the test pattern shown in the figure below for two-hours. Then display a completely white screen. The previous image shall not persist more than two seconds at 25°C.

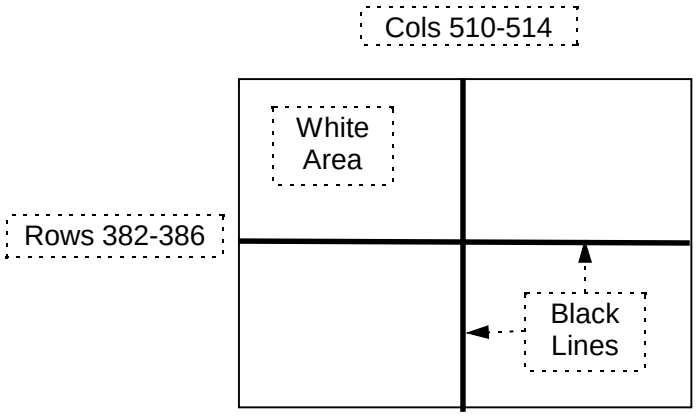

TEST PATTERN FOR IMAGE STICKING TEST

10. RELIABILITY TEST CONDITION

(1) Temperature and Humidity

TEST ITEM	CONDITIONS
HIGH TEMPERATURE HIGH HUMIDITY OPERATION	40°C, 90% RH, 240 h (No condensation)
HIGH TEMPERATURE OPERATION	70°C, 240 h
LOW TEMPERATURE OPERATION	-20°C, 240 h
HIGH TEMPERATURE STORAGE	80°C, 240 h
LOW TEMPERATURE STORAGE	-20°C, 240 h
THERMAL SHOCK (NON- OPERATION)	BETWEEN -20°C (1h) and 80°C(1h), 100 CYCLES

(2) Shock & Vibration

ITEM	CONDITIONS
SHOCK (NON-OPERATION)	Shock level: 980 m/s^2 (100 G) Waveform: half sinusoidal wave, 2 ms Number of shocks: one shock input in each direction of three mutually Perpendicular axes for a total of six shock inputs
VIBRATION (NON-OPERATION)	Vibration level: 9.8 m/s^2 (1.0 G) zero to peak Waveform: sinusoidal Frequency range: 5 to 500 Hz Frequency sweep rate: 0.5 octave /min Duration: one sweep from 5 to 500 Hz in each of three mutually perpendicular axis(each x,y,z axis: 1 hour, total 3 hours)

(3) Judgment standard

The judgment of the above tests should be made as follow:

Pass: Normal display image, no damage of the display function. (ex. no line defect)
Partial transformation of the module parts should be ignored.

Fail: No display image, damage of the display function. (ex. line defect)